美 特 鋁 質 有 限 公 司
MIDI ALUMINIUM FABRICATOR LTD.

工程指示 / 要求簡箋(E.I.)

工程指示編號：**EI / 4412 / 22** 修改版次：**A**

工程編號 ：**J - 858** 工程名稱 ：將軍澳日出康城

工程項目 ： 幕牆圖紙上載 6號圖

收件人 ：生統 發件人 ： **Renee Lo** 日 期 ：**24/06/2022**

☐要求提供 / ☐確認 事項 ：

( ) 初步鋁料 B.M.	( ) 加工拆圖，然後生產	( ) 尺寸表
( ) 正式鋁料 B.M.	( ) 技術上資料 / 指示	( ) 報價
( ) 配件 B.M.	( ) 樣辦或貨品說明書	( ) 分判合約

內容 ：

上載圖紙給參考 **(6th Shopdrawing for Curtain Wall at Tower 1, 2 & 3)**

謝謝

請在 **2022. 06. 28** 前完成上列要求。

附：

以上項目為:

☐ 原合約工程包 ☐ 原合約工程加 / 減賬 ☐ 新工程報價

原因 :-

分發東莞各部門 ：

( )生產技術總監☐連附件 ( )技術部 ☐連附件 ( )生產部 ☐連附件 ( )機械設計部☐連附件

( )採購部 ☐連附件 ( )生產統籌部☐連附件 ( )小羅&清 ☐連附件

( )質檢部 ☐連附件 ( )會計部 ☐連附件 ( )報關組 ☐連附件 ( )其他 _____☐連附件

分發其他分判 ：

☐連附件

分發香港各部門 ：

( )行政部☐連附件 ( )會計部☐連附件 ( )統籌部☐連附件 ( )工程部地盤科文☐連附件

( )採購部☐連附件 ( )QS 部 ☐連附件 ( )維修部☐連附件 ( )其他 _____☐連附件

傳遞編號： 發件人簽署：

HK 1036 **/ 22** 項目經理簽署：

PROJECT :

PROPOSED RESIDENTIAL DEVELOPMENT
AT TKOTL 70RP, PHASE 11,LOHAS PARK,TSEUNG KWAN O, N.T.

6

TITLE : CURTAIN WALL AT TOWER 1,2,& 3
SHOPDRAWING SUBMISSION

DATE: 31 -MAY- 2022

美特鋁質有限公司
MIDI ALUMINUM FABRICATOR LTD.
Units 6-8, Sunray Industrial Centre, 1/F
610 Cha Kwo Ling Road, Kowloon
Tel:23489211-4 Fax:(852)27727666

DWG NO. : J858-CW-CP01 | REV. : E

PROPOSED RESIDENTIAL DEVELOPMENT

DRAWING SUBMISSION REGISTER

PROJECT :
PROPOSED RESIDENTIAL DEVELOPMENT
AT TKOTL 70RP, PHASE 11,
LOHAS PARK,TSEUNG KWAN O, N.T.

TITLE :
SHOPDRAWING FOR
CURTAIN WALL

DRAWING TITLE	DWG. NO.	DATE OF ISSUE / REVISIONS	SUBMISSION STATE (FOR B.D / A.S.D) COMMENT DATE	REV.	STATE	SUBMISSION STATE (FOR CLIENT / CONSULTANT) COMMENT DATE	REV.	STATE	SUBMISSION STATE (FOR ARCHITECT) COMMENT DATE	REV.	STATE	FABRICATION / CONSTRUCTION STATE ISSUE TO CHINA OFFICE REV.	DATE	ISSUE TO SITE REV.	DATE	ISSUE TO SUB-CONTRACTOR REV.	DATE
ISSUE		01 02 03 04 05 06	AP - APPROVED			AP - APPROVED			AP - APPROVED								
DAY		13 06 23 09 19 31	AC - APPROVED SUB. TO CONDITION			AC - APPROVED SUB. TO CONDITION			AC - APPROVED SUB. TO CONDITION								
MONTH		11 12 12 03 04 05	NA - NOT APPROVED			NA - NOT APPROVED			NA - NOT APPROVED								
YEAR		21 21 21 22 22 22															
COVER PAGE	J-858-CW-CP01	- A B C D E															
GENERAL NOTE	J-858-CW-GN01	- A A B C C															
DRAWING LIST	J-858-CW-LT01	- A B C D E															
DRAWING LIST	J-858-CW-LT02	- A B C D E															
DRAWING LIST	J-858-CW-LT03	- A B C D E															
DRAWING LIST	J-858-CW-LT04	- A															
DRAWING LIST	J-858-CW-LT05	- A															
MATERIAL LIST FOR CURTAIN WALL	J-858-CW-CW01	- A A B C D															
MATERIAL LIST FOR CURTAIN WALL	J-858-CW-CW01A	- -															
MATERIAL LIST FOR CURTAIN WALL	J-858-CW-CW02	- A A B C C															
DIE LIST FOR CURTAIN WALL	J-858-CW-DL01	- A B C D E															
DIE LIST FOR CURTAIN WALL	J-858-CW-DL02	- A B C D E															
DIE LIST FOR CURTAIN WALL	J-858-CW-DL03	- A B C D E															
DIE LIST FOR CURTAIN WALL	J-858-CW-DL04	- A B C D D															
DIE LIST FOR CURTAIN WALL	J-858-CW-DL05	- A B B B C															
DIE LIST FOR CURTAIN WALL	J-858-CW-DL06	- A B C D E															
DIE LIST FOR CURTAIN WALL	J-858-CW-DL07	- A B															
DIE LIST FOR CURTAIN WALL	J-858-CW-DL08	- A B															
ELEVATION AT TOWER 1	J858-CW-FE-101	- - - A B C															
ELEVATION AT TOWER 1	J858-CW-FE-102	- - - A B C															
ELEVATION AT TOWER 2	J858-CW-FE-201	- - - A B C															
ELEVATION AT TOWER 2	J858-CW-FE-202	- - - A B C															
ELEVATION AT TOWER 3	J858-CW-FE-301	- - - A B C															
ELEVATION AT TOWER 3	J858-CW-FE-302	- - - A B C															
TYPICAL FLOOR PLAN AT TOWER 1	J858-CW-LP-101	- A B C D E															
TYPICAL FLOOR PLAN AT TOWER 1	J858-CW-LP-102	- - - A B C															
TYPICAL FLOOR PLAN AT TOWER 1	J858-CW-LP-103	- A B															
TYPICAL FLOOR PLAN AT TOWER 2	J858-CW-LP-201	- A B C D D															
TYPICAL FLOOR PLAN AT TOWER 2	J858-CW-LP-202	- - - A B C															
TYPICAL FLOOR PLAN AT TOWER 2	J858-CW-LP-203	- A A															
TYPICAL FLOOR PLAN AT TOWER 3	J858-CW-LP-301	- A B C D E															
TYPICAL FLOOR PLAN AT TOWER 3	J858-CW-LP-302	- - - A B C															
TYPICAL FLOOR PLAN AT TOWER 3	J858-CW-LP-303	- A B															
TYPICAL FLOOR EMBED LAYOUT PLAN AT TOWER 1	J-858-CW-EP101	- A B C D E															
12/F & 41/F EMBED LAYOUT PLAN AT TOWER 1	J-858-CW-EP102	- A B C D E															
11/F & 40/F EMBED LAYOUT PLAN AT TOWER 1	J-858-CW-EP103	- A B C															
9/F EMBED LAYOUT PLAN AT TOWER 1	J-858-CW-EP104	- A B C															
62/F EMBED LAYOUT PLAN AT TOWER 1	J-858-CW-EP105	- A B															
ROOF EMBED LAYOUT PLAN AT TOWER 1	J-858-CW-EP106	- A A															
TYPICAL FLOOR EMBED LAYOUT PLAN AT TOWER 2	J-858-CW-EP201	- A B C D E															
12/F & 41/F EMBED LAYOUT PLAN AT TOWER 2	J-858-CW-EP202	- A B C D E															
11/F & 40/F EMBED LAYOUT PLAN AT TOWER 2	J-858-CW-EP203	- A B C															
9/F EMBED LAYOUT PLAN AT TOWER 2	J-858-CW-EP204	- A B C															
67/F EMBED LAYOUT PLAN AT TOWER 2	J-858-CW-EP205	- A B															
ROOF EMBED LAYOUT PLAN AT TOWER 2	J-858-CW-EP206	- A A															

B.D. REF :

CLIENT :
信和置業有限公司
Sino Land Company Limited

ARCHITECT :
ronald lu & partners
Architects Planners Interior Designers
Ronald Lu & Partners (HK) Ltd.
呂元祥建築師事務所(香港)有限公司

MAIN CONTRACTOR :
Gammon

STRUCTURAL ENGINEER :
AECOM

FACADE CONSULTANT:
AECOM

NOTE :
1. ALL DIMENSIONS ARE IN mm.
2. ALL ELEVATIONS ARE VIEWED FROM OUTSIDE.
3. ALL DIMENSIONS TO BE VERIFIED ON SITE BEFORE FABRICATION.

LEGEND :
X1 — DETAIL MARK NO.
X001 — REFER SHEET NO.

1. F.F.L. --FINISHED FLOOR LEVEL
2. S.F.L. --STRUCTURAL FLOOR LEVEL
3. (R) --REVERSED DETAIL

NO.	DATE	REVISED	BY
E	31/05/22	REVISED AS PER COMMENTS	LS
D	19/04/22	REVISED AS PER COMMENTS	LS
C	08/03/22	REVISED AS PER COMMENTS	LS
B	20/12/21	REVISED AS PER COMMENTS	LS
A	03/12/21	REVISED AS PER COMMENTS	LS

JOB NO. : J-858

PROJECT :
PROPOSED RESIDENTIAL DEVELOPMENT
AT TKOTL 70RP, PHASE 11, LOHAS PARK
TSEUNG KWAN O, N.T.

TITLE :
DRAWING LIST
FOR CURTAIN WALL

DATE : 04-OCT-21 | SCALE : 1:1

DRAWN BY : | CHECKED BY :

美特鋁質有限公司
MIDI ALUMINIUM FABRICATOR LTD.
Units 6-8, Sunray Industrial Centre, 1/F
610 Cha Kwo Ling Road, Kowloon
Tel:23489211-4 Fax:(852)27727666

DWG NO. : J858-CW-LT01 | REV. : E

PROPOSED RESIDENTIAL DEVELOPMENT

DRAWING SUBMISSION REGISTER

PROJECT :
PROPOSED RESIDENTIAL DEVELOPMENT
AT TKOTL 70RP, PHASE 11,
LOHAS PARK,TSEUNG KWAN O, N.T.

TITLE :
SHOPDRAWING FOR
CURTAIN WALL

DATE OF ISSUE											
ISSUE	01	02	03	04	05	06					
DAY	13	06	23	09	19	31					
MONTH	11	12	12	03	04	05					
YEAR	21	21	21	22	22	22					

SUBMISSION STATE (FOR B.D / A.S.D)
AP - APPROVED
AC - APPROVED SUB. TO CONDITION
NA - NOT APPROVED

SUBMISSION STATE (FOR CLIENT / CONSULTANT)
AP - APPROVED
AC - APPROVED SUB. TO CONDITION
NA - NOT APPROVED

SUBMISSION STATE (FOR ARCHITECT)
AP - APPROVED
AC - APPROVED SUB. TO CONDITION
NA - NOT APPROVED

FABRICATION / CONSTRUCTION STATE
ISSUE TO CHINA OFFICE
ISSUE TO SITE
ISSUE TO SUB-CONTRACTOR

DRAWING TITLE	DWG. NO.	REVISIONS		COMMENT DATE	REV.	STATE	COMMENT DATE	REV.	STATE	COMMENT DATE	REV.	STATE	REV.	DATE	REV.	DATE	REV.	DATE
TYPICAL FLOOR EMBED LAYOUT PLAN AT TOWER 3	J-858-CW-EP301	- A B C D E																
12/F & 41/F EMBED LAYOUT PLAN AT TOWER 3	J-858-CW-EP302	- A B C D E																
11/F & 40/F EMBED LAYOUT PLAN AT TOWER 3	J-858-CW-EP303	- A B C																
9/F EMBED LAYOUT PLAN AT TOWER 3	J-858-CW-EP304	- A B C																
67/F EMBED LAYOUT PLAN AT TOWER 3	J-858-CW-EP305	- A B																
ROOF EMBED LAYOUT PLAN AT TOWER 3	J-858-CW-EP306	- A A																
CURTAIN WALL EMBED DETAIL AT TOWER 1, 2, 3	J-858-CW-EF01	- - A B C C																
CURTAIN WALL EMBED DETAIL AT TOWER 1, 2, 3	J-858-CW-EF01A	- A A																
CURTAIN WALL EMBED DETAIL AT TOWER 1, 2, 3	J-858-CW-EF02	- A B C D E																
CURTAIN WALL EMBED DETAIL AT TOWER 1, 2, 3	J-858-CW-EF03	- A B C D E																
CURTAIN WALL EMBED DETAIL AT TOWER 1, 2, 3	J-858-CW-EF04	- A B C D E																
CURTAIN WALL EMBED DETAIL AT TOWER 1, 2, 3	J-858-CW-EF05	- A																
TYPICAL FLOOR PARTIAL ELEVATION & SECTION, PLAN FOR CURTAIN WALL (TOWER 1)	J-858-CW-PE101	- A B C D E																
TYPICAL FLOOR PARTIAL ELEVATION & SECTION, PLAN FOR CURTAIN WALL (TOWER 1)	J-858-CW-PE102	- A B C D E																
TYPICAL FLOOR PARTIAL ELEVATION & SECTION, PLAN FOR CURTAIN WALL (TOWER 1)	J-858-CW-PE103	- A B C D E																
TYPICAL FLOOR PARTIAL ELEVATION & SECTION, PLAN FOR CURTAIN WALL (TOWER 1)	J-858-CW-PE104	- A B C D E																
TYPICAL FLOOR PARTIAL ELEVATION & SECTION, PLAN FOR CURTAIN WALL (TOWER 1)	J-858-CW-PE105	- A B C D E																
TYPICAL FLOOR PARTIAL ELEVATION & SECTION, PLAN FOR CURTAIN WALL (TOWER 1)	J-858-CW-PE106	- A B C D E																
TYPICAL FLOOR PARTIAL ELEVATION & SECTION, PLAN FOR CURTAIN WALL (TOWER 1)	J-858-CW-PE107	- A B C D E																
TYPICAL FLOOR PARTIAL ELEVATION & SECTION, PLAN FOR CURTAIN WALL (TOWER 1)	J-858-CW-PE108	- A B C D E																
TYPICAL FLOOR PARTIAL ELEVATION & SECTION, PLAN FOR CURTAIN WALL (TOWER 1)	J-858-CW-PE109	- A B C D E																
TYPICAL FLOOR PARTIAL ELEVATION & SECTION, PLAN FOR CURTAIN WALL (TOWER 1)	J-858-CW-PE110	- A B C D E																
TYPICAL FLOOR PARTIAL ELEVATION & SECTION, PLAN FOR CURTAIN WALL (TOWER 1)	J-858-CW-PE111	- A B C D E																
TYPICAL FLOOR PARTIAL ELEVATION & SECTION, PLAN FOR CURTAIN WALL (TOWER 1)	J-858-CW-PE112	- A B C D E																
TYPICAL FLOOR PARTIAL ELEVATION & SECTION, PLAN FOR CURTAIN WALL (TOWER 1)	J-858-CW-PE113	- A B C D E																
TYPICAL FLOOR PARTIAL ELEVATION & SECTION, PLAN FOR CURTAIN WALL (TOWER 1)	J-858-CW-PE114	- A B C D E																
TYPICAL FLOOR PARTIAL ELEVATION & SECTION, PLAN FOR CURTAIN WALL (TOWER 1)	J-858-CW-PE115	- A B C D E																
TYPICAL FLOOR PARTIAL ELEVATION & SECTION, PLAN FOR CURTAIN WALL (TOWER 1)	J-858-CW-PE116	- A B C D E																
PENTHOUSE FLOOR PARTIAL ELEVATION & SECTION, PLAN FOR CURTAIN WALL (TOWER 1)	J-858-CW-PE117	- A B																
PENTHOUSE FLOOR PARTIAL ELEVATION & SECTION, PLAN FOR CURTAIN WALL (TOWER 1)	J-858-CW-PE118	- A A																
PENTHOUSE FLOOR PARTIAL ELEVATION & SECTION, PLAN FOR CURTAIN WALL (TOWER 1)	J-858-CW-PE119	- A A																
PENTHOUSE FLOOR PARTIAL ELEVATION & SECTION, PLAN FOR CURTAIN WALL (TOWER 1)	J-858-CW-PE120	- A A																
PENTHOUSE FLOOR PARTIAL ELEVATION & SECTION, PLAN FOR CURTAIN WALL (TOWER 1)	J-858-CW-PE121	- A B																
TYPICAL FLOOR PARTIAL ELEVATION & SECTION, PLAN FOR CURTAIN WALL (TOWER 2)	J-858-CW-PE201	- A B C D E																
TYPICAL FLOOR PARTIAL ELEVATION & SECTION, PLAN FOR CURTAIN WALL (TOWER 2)	J-858-CW-PE202	- A B C D E																
TYPICAL FLOOR PARTIAL ELEVATION & SECTION, PLAN FOR CURTAIN WALL (TOWER 2)	J-858-CW-PE203	- A B C D E																
TYPICAL FLOOR PARTIAL ELEVATION & SECTION, PLAN FOR CURTAIN WALL (TOWER 2)	J-858-CW-PE204	- A B C D E																
TYPICAL FLOOR PARTIAL ELEVATION & SECTION, PLAN FOR CURTAIN WALL (TOWER 2)	J-858-CW-PE205	- A B C D E																
TYPICAL FLOOR PARTIAL ELEVATION & SECTION, PLAN FOR CURTAIN WALL (TOWER 2)	J-858-CW-PE206	- A B C D E																
TYPICAL FLOOR PARTIAL ELEVATION & SECTION, PLAN FOR CURTAIN WALL (TOWER 2)	J-858-CW-PE207	- A B C D E																
TYPICAL FLOOR PARTIAL ELEVATION & SECTION, PLAN FOR CURTAIN WALL (TOWER 2)	J-858-CW-PE208	- A B C D E																
TYPICAL FLOOR PARTIAL ELEVATION & SECTION, PLAN FOR CURTAIN WALL (TOWER 2)	J-858-CW-PE209	- A B C D E																
TYPICAL FLOOR PARTIAL ELEVATION & SECTION, PLAN FOR CURTAIN WALL (TOWER 2)	J-858-CW-PE210	- A B C D E																
TYPICAL FLOOR PARTIAL ELEVATION & SECTION, PLAN FOR CURTAIN WALL (TOWER 2)	J-858-CW-PE211	- A B C D E																
TYPICAL FLOOR PARTIAL ELEVATION & SECTION, PLAN FOR CURTAIN WALL (TOWER 2)	J-858-CW-PE212	- A B C D E																

B.D. REF :

CLIENT :
信和置業有限公司
Sino Land Company Limited

ARCHITECT :
ronald lu & partners
Architects · Planners · Interior Designers
Ronald Lu & Partners (HK) Ltd.
呂元祥建築師事務所(香港)有限公司

MAIN CONTRACTOR :
Gammon

STRUCTURAL ENGINEER :
AECOM

FACADE CONSULTANT:
AECOM

NOTE :
1. ALL DIMENSIONS ARE IN mm.
2. ALL ELEVATIONS ARE VIEWED FROM OUTSIDE.
3. ALL DIMENSIONS TO BE VERIFIED ON SITE BEFORE FABRICATION.

LEGEND :
X1 / X001 — DETAIL MARK NO. / REFER SHEET NO.
1. F.F.L. --FINISHED FLOOR LEVEL
2. S.F.L. --STRUCTURAL FLOOR LEVEL
3. /R --REVERSED DETAIL

NO.	DATE	REVISED	BY
E	31/05/22	REVISED AS PER COMMENTS	LS
D	19/04/22	REVISED AS PER COMMENTS	LS
C	08/03/22	REVISED AS PER COMMENTS	LS
B	20/12/21	REVISED AS PER COMMENTS	LS
A	03/12/21	REVISED AS PER COMMENTS	LS

JOB NO. : J-858

PROJECT :
PROPOSED RESIDENTIAL DEVELOPMENT
AT TKOTL 70RP, PHASE 11, LOHAS PARK
TSEUNG KWAN O, N.T.

TITLE :
DRAWING LIST
FOR CURTAIN WALL

DATE : 04-OCT-21 | SCALE : 1:1

DRAWN BY : | CHECKED BY :

美特鋁質有限公司
MIDI ALUMINIUM FABRICATOR LTD.
Units 6-8, Sunray Industrial Centre, 1/F
610 Cha Kwo Ling Road, Kowloon
Tel:23489211-4 Fax:(852)27727666

DWG NO. : J858-CW-LT02 | REV. : E

PROPOSED RESIDENTIAL DEVELOPMENT

DRAWING SUBMISSION REGISTER

PROJECT :
PROPOSED RESIDENTIAL DEVELOPMENT
AT TKOTL 70RP, PHASE 11,
LOHAS PARK,TSEUNG KWAN O, N.T.

TITLE :
SHOPDRAWING FOR
CURTAIN WALL

| DATE OF ISSUE | | |

PROPOSED RESIDENTIAL DEVELOPMENT

DRAWING SUBMISSION REGISTER

PROJECT :
PROPOSED RESIDENTIAL DEVELOPMENT
AT TKOTL 70RP, PHASE 11,
LOHAS PARK,TSEUNG KWAN O, N.T.

TITLE :
SHOPDRAWING FOR
CURTAIN WALL

DATE OF ISSUE										
ISSUE	01	02	03	04	05	06				
DAY	13	05	23	09	19	31				
MONTH	11	12	12	03	04	05				
YEAR	21	21	21	22	22	22				

SUBMISSION STATE (FOR B.D / A.S.D)
AP - APPROVED
AC - APPROVED SUB. TO CONDITION
NA - NOT APPROVED

SUBMISSION STATE (FOR CLIENT / CONSULTANT)
AP - APPROVED
AC - APPROVED SUB. TO CONDITION
NA - NOT APPROVED

SUBMISSION STATE (FOR ARCHITECT)
AP - APPROVED
AC - APPROVED SUB. TO CONDITION
NA - NOT APPROVED

FABRICATION / CONSTRUCTION STATE
ISSUE TO CHINA OFFICE
ISSUE TO SITE
ISSUE TO SUB-CONTRACTOR

DRAWING TITLE	DWG. NO.	REVISIONS	SUBMISSION STATE (FOR B.D / A.S.D) COMMENT DATE	REV.	STATE	SUBMISSION STATE (FOR CLIENT / CONSULTANT) COMMENT DATE	REV.	STATE	SUBMISSION STATE (FOR ARCHITECT) COMMENT DATE	REV.	STATE	FABRICATION / CONSTRUCTION STATE ISSUE TO CHINA OFFICE REV.	DATE	ISSUE TO SITE REV.	DATE	ISSUE TO SUB-CONTRACTOR REV.	DATE
TYPICAL MULLION DETAIL FOR CURTAIN WALL	J-858-CW-D16	- A B C C D															
TYPICAL MULLION DETAIL FOR CURTAIN WALL	J-858-CW-D17	- A B															
TYPICAL MULLION DETAIL FOR CURTAIN WALL	J-858-CW-D18	- A B															
TYPICAL MULLION DETAIL FOR CURTAIN WALL	J-858-CW-D19	- A B															
TYPICAL MULLION DETAIL FOR CURTAIN WALL	J-858-CW-D20	- A B															
TYPICAL MULLION DETAIL FOR CURTAIN WALL	J-858-CW-D21	- A B															
TYPICAL MULLION DETAIL FOR CURTAIN WALL	J-858-CW-D22	- A B															
TYPICAL MULLION DETAIL FOR CURTAIN WALL	J-858-CW-D23	- A B															
TYPICAL MULLION DETAIL FOR CURTAIN WALL	J-858-CW-D24	- A B															
TYPICAL MULLION DETAIL FOR CURTAIN WALL	J-858-CW-D25	- A B															
TYPICAL MULLION DETAIL FOR CURTAIN WALL	J-858-CW-D25A	- -															
TYPICAL MULLION DETAIL FOR CURTAIN WALL	J-858-CW-D26	- A B															
TYPICAL MULLION DETAIL FOR CURTAIN WALL	J-858-CW-D26A	- A															
TYPICAL MULLION DETAIL FOR CURTAIN WALL	J-858-CW-D27	- A															
TYPICAL MULLION DETAIL FOR CURTAIN WALL	J-858-CW-D28	- A															
TYPICAL MULLION DETAIL FOR CURTAIN WALL	J-858-CW-D29	- A															
TYPICAL MULLION DETAIL FOR CURTAIN WALL	J-858-CW-D30	- A															
TYPICAL MULLION DETAIL FOR CURTAIN WALL	J-858-CW-D31	- A															
TYPICAL MULLION DETAIL FOR CURTAIN WALL	J-858-CW-D32	- A															
TYPICAL MULLION DETAIL FOR CURTAIN WALL	J-858-CW-D33	- A															
TYPICAL MULLION DETAIL FOR CURTAIN WALL	J-858-CW-D34	- A															
TYPICAL MULLION DETAIL FOR CURTAIN WALL	J-858-CW-D35	- A															
TYPICAL MULLION DETAIL FOR CURTAIN WALL	J-858-CW-D36	- A															
TYPICAL MULLION DETAIL FOR CURTAIN WALL	J-858-CW-D37	- A															
TYPICAL MULLION DETAIL FOR CURTAIN WALL	J-858-CW-D38	- -															
TYPICAL MULLION DETAIL FOR CURTAIN WALL	J-858-CW-D39	- A															
TYPICAL MULLION DETAIL FOR CURTAIN WALL	J-858-CW-D40	- A															
TYPICAL MULLION DETAIL FOR CURTAIN WALL	J-858-CW-D41	-															
TYPICAL MULLION DETAIL FOR CURTAIN WALL	J-858-CW-D51	- A B C C D															
TYPICAL MULLION DETAIL FOR CURTAIN WALL	J-858-CW-D52	- A B C C C															
TYPICAL MULLION DETAIL FOR CURTAIN WALL	J-858-CW-D53	- A B C C D															
TYPICAL MULLION DETAIL FOR CURTAIN WALL	J-858-CW-D54	- A B C C D															
TYPICAL MULLION DETAIL FOR CURTAIN WALL	J-858-CW-D55	- - A C C D															
TYPICAL MULLION DETAIL FOR CURTAIN WALL	J-858-CW-D56	- A B C C D															
TYPICAL MULLION DETAIL FOR CURTAIN WALL	J-858-CW-D57	- A B C C D															
TYPICAL MULLION DETAIL FOR CURTAIN WALL	J-858-CW-D58	- A B C C C															
TYPICAL MULLION DETAIL FOR CURTAIN WALL	J-858-CW-D59	- - B C C D															
TYPICAL MULLION DETAIL FOR CURTAIN WALL	J-858-CW-D60	- A B B B B															
TYPICAL MULLION DETAIL FOR CURTAIN WALL	J-858-CW-D61	- A B C C D															
TYPICAL MULLION DETAIL FOR CURTAIN WALL	J-858-CW-D62	- A B C C D															
TYPICAL MULLION DETAIL FOR CURTAIN WALL	J-858-CW-D63	- A B C C D															
TYPICAL MULLION DETAIL FOR CURTAIN WALL	J-858-CW-D64	- A B C C D															
TYPICAL MULLION DETAIL FOR CURTAIN WALL	J-858-CW-D65	- A B C C D															
TYPICAL MULLION DETAIL FOR CURTAIN WALL	J-858-CW-D66	- A B C															
TYPICAL MULLION DETAIL FOR CURTAIN WALL	J-858-CW-D67	- A B C															

B.D. REF :

CLIENT :
信和置業有限公司
Sino Land Company Limited

ARCHITECT :
ronald lu & partners
Architects . Planners . Interior Designers
Ronald Lu & Partners (HK) Ltd.
呂元祥建築師事務所(香港)有限公司

MAIN CONTRACTOR :
Gammon

STRUCTURAL ENGINEER :
AECOM

FACADE CONSULTANT:
AECOM

NOTE :
1. ALL DIMENSIONS ARE IN mm.
2. ALL ELEVATIONS ARE VIEWED FROM OUTSIDE.
3. ALL DIMENSIONS TO BE VERIFIED ON SITE BEFORE FABRICATION.

LEGEND :
X1 — DETAIL MARK NO.
X001 — REFER SHEET NO.

1. F.F.L. -- FINISHED FLOOR LEVEL
2. S.F.L. -- STRUCTURAL FLOOR LEVEL
3. (/R) -- REVERSED DETAIL

NO.	DATE	REVISED	BY
A	31/05/22	REVISED AS PER COMMENTS	LS

JOB NO. : J-858

PROJECT :
PROPOSED RESIDENTIAL DEVELOPMENT
AT TKOTL 70RP, PHASE 11, LOHAS PARK
TSEUNG KWAN O, N.T.

TITLE :
DRAWING LIST
FOR CURTAIN WALL

DATE : 04-OCT-21 | SCALE : 1:1

DRAWN BY : | CHECKED BY :

美特鋁質有限公司
MIDI ALUMINIUM FABRICATOR LTD.
Units 6-8, Sunray Industrial Centre, 1/F
610 Cha Kwo Ling Road, Kowloon
Tel:23489211-4 Fax:(852)27727666

DWG NO. : J858-CW-LT04 | REV. : A

PROPOSED RESIDENTIAL DEVELOPMENT

DRAWING SUBMISSION REGISTER

PROJECT :
PROPOSED RESIDENTIAL DEVELOPMENT
AT TKOTL 70RP, PHASE 11,
LOHAS PARK,TSEUNG KWAN O, N.T.

TITLE :
SHOPDRAWING FOR
CURTAIN WALL

DATE OF ISSUE										
ISSUE	01	02	03	04	05	06				
DAY	13	06	23	09	19	31				
MONTH	11	12	12	03	04	05				
YEAR	21	21	21	22	22	22				

SUBMISSION STATE (FOR B.D / A.S.D)
AP - APPROVED
AC - APPROVED SUB. TO CONDITION
NA - NOT APPROVED

SUBMISSION STATE (FOR CLIENT / CONSULTANT)
AP - APPROVED
AC - APPROVED SUB. TO CONDITION
NA - NOT APPROVED

SUBMISSION STATE (FOR ARCHITECT)
AP - APPROVED
AC - APPROVED SUB. TO CONDITION
NA - NOT APPROVED

FABRICATION / CONSTRUCTION STATE
ISSUE TO CHINA OFFICE
ISSUE TO SITE
ISSUE TO SUB-CONTRACTOR

DRAWING TITLE	DWG. NO.	REVISIONS	COMMENT DATE	REV.	STATE	COMMENT DATE	REV.	STATE	COMMENT DATE	REV.	STATE	REV.	DATE	REV.	DATE	REV.	DATE
TYPICAL MULLION DETAIL FOR CURTAIN WALL	J-858-CW-D68	- A B C															
TYPICAL MULLION DETAIL FOR CURTAIN WALL	J-858-CW-D69	- A A															
TYPICAL MULLION DETAIL FOR CURTAIN WALL	J-858-CW-D70	- A B															
TYPICAL MULLION DETAIL FOR CURTAIN WALL	J-858-CW-D71	- A A															
TYPICAL MULLION DETAIL FOR CURTAIN WALL	J-858-CW-D72	- A															
TYPICAL MULLION DETAIL FOR CURTAIN WALL	J-858-CW-D73	- A															
TYPICAL MULLION DETAIL FOR CURTAIN WALL	J-858-CW-D74	- A															
TYPICAL MULLION DETAIL FOR CURTAIN WALL	J-858-CW-D75	- A															
TYPICAL MULLION DETAIL FOR CURTAIN WALL	J-858-CW-D76	- -															
TYPICAL MULLION DETAIL FOR CURTAIN WALL	J-858-CW-D77	- A															
TYPICAL MULLION DETAIL FOR CURTAIN WALL	J-858-CW-D78	- A															
TYPICAL MULLION DETAIL FOR CURTAIN WALL	J-858-CW-D79	- A															
TYPICAL MULLION DETAIL FOR CURTAIN WALL	J-858-CW-D80	- A															
TYPICAL MULLION DETAIL FOR CURTAIN WALL	J-858-CW-D81	- A															

B.D. REF :

CLIENT :
信和置業有限公司
Sino Land Company Limited

ARCHITECT :
ronald lu & partners
Architects . Planners . Interior Designers
Ronald Lu & Partners (HK) Ltd.
呂元祥建築師事務所(香港)有限公司

MAIN CONTRACTOR :
Gammon

STRUCTURAL ENGINEER :
AECOM

FACADE CONSULTANT:
AECOM

NOTE :
1. ALL DIMENSIONS ARE IN mm.
2. ALL ELEVATIONS ARE VIEWED FROM OUTSIDE.
3. ALL DIMENSIONS TO BE VERIFIED ON SITE BEFORE FABRICATION.

LEGEND :
X1 — DETAIL MARK NO.
X001 — REFER SHEET NO.

1. F.F.L. --FINISHED FLOOR LEVEL
2. S.F.L. --STRUCTURAL FLOOR LEVEL
3. (R) --REVERSED DETAIL

NO.	DATE	REVISED	BY
A	31/05/22	REVISED AS PER COMMENTS	LS

JOB NO. : J-858

PROJECT :
PROPOSED RESIDENTIAL DEVELOPMENT
AT TKOTL 70RP, PHASE 11, LOHAS PARK
TSEUNG KWAN O, N.T.

TITLE :
DRAWING LIST
FOR CURTAIN WALL

DATE : 04-OCT-21 | SCALE : 1:1

DRAWN BY : | CHECKED BY :

美特鋁質有限公司
MIDI ALUMINIUM FABRICATOR LTD.
Units 6-8, Sunray Industrial Centre, 1/F
610 Cha Kwo Ling Road, Kowloon
Tel:23489211-4 Fax:(852)27727666

DWG NO. : J858-CW-LT05 | REV. : A

GENERAL NOTES FOR CURTAIN WALL

1. DESIGN CODES
   i) BUILDING (CONSTRUCTION) REGULATIONS , 2021 HONG KONG.
   ii) CODE OF PRACTICE FOR THE STRUCTURAL USE OF STEEL, 2011 HONG KONG.
   iii) CODE OF PRACTICE FOR THE STRUCTURAL USE OF CONCRETE, 2013 HONG KONG.
   iv) CODE OF PRACTICE ON WIND EFFECTS IN HONG KONG 2004.
   v) BS 8118 – THE STRUCTURAL USE OF ALUMINIUM, PART 1 – 1991.
   vi) CODE OF PRACTICE FOR THE STRUCTURAL USE OF GLASS – 2018 HONG KONG.
   vii) BS EN 10088: 2005 STAINLESS STEELS.
   viii) PNAP APP037 – CURTAIN WALL, WINDOW AND WINDOW WALL SYSTEM.
   ix) CODE OF PRACTICE FOR DEAD AND IMPOSED LOAD 2011.
   x) CODE OF PRACTICE FOR FIRE SAFETY IN BUILDINGS 2011.

2. DESIGN LOADS
   a) WIND LOAD :
   HEIGHT ABOVE GROUND LEVEL = 203.80mPD – 14.00mPD = 189.80m
   DESIGN WIND PRESSURE FOR CURTAIN WALL
   BASE WIND LOAD : 3.26 KPa
   DESIGN WIND LOAD (Cp = +1.0/−1.4) : 3.26 x (Cp = +1.0) = 3.26 KPa (FOR INWARD)
   3.26 x (Cp = −1.4) = −4.564 KPa (FOR OUTWARD)

   b) IMPOSED LOAD : (FOR RESIDENTIAL FLOOR)
   NONCROWDED LOAD – HORIZONTAL IMPOSED LOAD SHALL BE COMPLIED CODE OF PRACTICE FOR DEAD & IMPOSED LOADS 2011.
   i) LINE LOAD TO BE APPLIED AT A HEIGHT OF 1.1m ABOVE F.F.L. = 0.75 kN/m
   ii) UNIFORMLY DISTRIBUTED LOAD TO BE APPLIED ON THE INFILL BETWEEN FLOOR AND TOP RAIL = 1.0 kPa
   iii) CONCENTRATED LOAD TO BE APPLIED ON ANY PART OF THE INFILL BETWEEN FLOOR AND TOP RAIL = 0.5 kN

   c) DEAD LOAD :
   i) GLASS WEIGHT = 26 kN/m³
   ii) STEEL WEIGHT = 77 kN/m³
   iii) ALUM. WEIGHT = 27.2 kN/m³

3. GLASS
   a) FACIAL GLASS FOR CURTAIN WALL USED TO BE :
   i) G1 (FOR FIXED VISION ZONE & SLIDING DOOR) (MAX SPAN = 2105.5W x 2533H)
   IGU 10mm THK. HEAT STRENGTHENED GLASS (OUTER) W/ LOW-E COATING ON SURFACE #2 + 12 mm AIR SPACE + 12mm THK. TEMPERED GLASS (INNER)
   ii) G2 (FOR OPENABLE VISION ZONE) (MAX SPAN = 1207.5W x 1643H)
   IGU 10mm THK. HEAT STRENGTHENED GLASS (OUTER) W/ LOW-E COATING ON SURFACE #2 + 12 mm AIR SPACE + 10mm THK. TEMPERED GLASS (INNER)
   iii) G3 (FOR SPANDREL ZONE) (MAX SPAN = 945W x 2533H)
   12mm THK. HEAT STRENGTHENED GLASS WITH BACK PAN
   iv) G4 (FOR PROTECTIVE BARRIER) (MAX SPAN = 1107.5W x 1454H)
   (12mm) THK CLEAR TEMPERED GLASS
   ~~(NOTE) G3 : 10mm BLUE TINTED HEAT STRENGTHENED GLASS WITH BACK PAN (FOR SPANDREL ZONE)~~
   ~~(NOTE) G51 :10mm THK. CLEAR TEMPERED GLASS (FOR SLIDING DOOR)~~
   ~~(NOTE) G52 :8mm THK. CLEAR HEAT STRENGTHENED GLASS (OUTER) + 1.52mm PVB + 8mm THK. CLEAR HEAT STRENGTHENED GLASS (INNER) (FOR SLIDING DOOR)~~

   b) FULL TEMPERED GLASS TO BE 100% HEAT SOAK TESTED IN ACCORDANCE WITH BS EN 14179-1:2005 AND PNAP APP 37.

   c) DESIGN OF GLASS SHALL COMPLY TO B.S. 6262, 2005 :
   ALLOWABLE BENDING STRENGTH (TEMPERED) = 50 N/mm²
   ALLOWABLE BENDING STRENGTH (HEAT STRENGTHENED) = 25 N/mm²
   YOUNG'S MODULUS = 70,000 N/mm²
   DENSITY = 25 kN/m³

   d) GLASS MATERIALS SHALL COMPLY TO BS 952:1995.

   e) ALL GLASS UNDER 1.1m ABOVE F.F.L. SHALL BE COMPLY IMPACT TEST TO BS 6206 CLASS A.

   f) RESIDUAL SURFACE COMPRESSION FOR TEMPERED GLASS TO BE NOT LESS THAN 69 MPa.

4. ALUMINIUM ALLOY
   a) ALUMINIUM SHEET :
   ALL ALUMINIUM SHEET TO BE ALLOY 3003-H14 TO ALUMINIUM DESIGN MANUAL: BS EN485-2:2008
   0.2% PROOF (YIELD) STRENGTH = 125 MPa
   MINIMUM ULTIMATE TENSILE STRESS = 145 MPa
   MODULUS OF ELASTICITY (E) = 70000 MPa

   b) ALUMINIUM EXTRUSION :
   IN ACCORDANCE WITH DESIGN CODE BS: 8118-1:1991, COMPLY TO BS EN 755-2, 2008
   i) ALUMINIUM EXTRUSION – TO BE ALLOY 6063-T5
   0.2% PROOF STRENGTH = 110 MPa
   MINIMUM TENSILE STRENGTH = 130 MPa
   MODULUS OF ELASTICITY = 70000 MPa
   ii) ALUMINIUM EXTRUSION – TO BE ALLOY 6063-T6
   0.2% PROOF STRENGTH = 160 MPa
   MINIMUM TENSILE STRENGTH = 175 MPa
   MODULUS OF ELASTICITY = 70000 MPa
   iii) ALUMINIUM EXTRUSION – TO BE ALLOY 6061-T6
   0.2% PROOF STRENGTH = 240 MPa
   MINIMUM TENSILE STRENGTH = 260 MPa
   MODULUS OF ELASTICITY = 70000 MPa

5. STEEL
   a) ALL STEEL MEMBERS SHALL MEET THE MINIMUM REQUIREMENTS OF BS EN10025 S275 JO AND CLASS 1 TO C.O.P. FOR THE STRUCTURAL USE OF STEEL 2011.

   b) SURFACE TREATMENT SHALL BE HOT-DIP GALVANIZED COMPLIED WITH BS EN ISO 1461, 2009. (MIN. THICKNESS = 85 MICRONS)

   i) FOR THICKNESS "T" : T≤16mm (GRADE S275)
   YOUNG'S MODULUS = 205,000 N/mm²
   DENSITY = 77 kN/m³
   YIELD = 275 N/mm²
   TENSILE STRENGTH = 275 N/mm²
   BENDING STRENGTH = 275 N/mm²
   SHEAR STRENGTH = 158.8 N/mm²

   ii) FOR THICKNESS "T" : 16mm<T≤40mm (GRADE S275)
   YOUNG'S MODULUS = 205,000 N/mm²
   DENSITY = 77 kN/m³
   YIELD = 255 N/mm²
   TENSILE STRENGTH = 255 N/mm²
   BENDING STRENGTH = 255 N/mm²
   SHEAR STRENGTH = 153 N/mm²

6. WELDING :
   i) ALL WELDS SHALL COMPLY TO BS EN 1011 & BS EN 440 OR EQUIVALENT TO HKSC 2011.
   DESIGN STRENGTH = 220 N/mm²
   ii) UNLESS OTHERWISE INDICATED, ALL WELDS SHALL BE 5mm THICK FILLET WELD.
   iii) ALL WELDING SHALL BE ELECTRODE PERFORMED BY QUALIFIED WELDERS, TO BE COMPLY WITH BS EN 1011.
   iv) ALL SITE WELDS SHALL BE RECEIVED 2 COATS OF ZINC CHROMATE PRIMER.

7. SILICONE SEALANT :
   a) WEATHER SEALANT
   i) "DOW CORNING – 791" TO BE USED AS WEATHER SEALED & CAULKING SEALANT.
   COLOR: "PRECAST WHITE" FOR INTERFACING w/BONE WHITE CLADDING, TAILOR MADE SEALANT TO MATCH CLADDING.
   COLOR: "SILVER CHAMPAGNE" FOR CURTAIN WALL INTERIOR CLADDING INTERFACES.
   COLOR: "DARK GREY" FOR OTHER CLADDING INTERFACES.

   b) STRUCTURAL SEALANT
   i) ALL IN SHOP APPLIED STRUCTURAL SEALANT TO BE "DOW CORNING – 983" (BD REF: BD-SS-001).
   ALLOWABLE STRESS = 138kPa
   ii) SECONDARY SEAL FOR IGU SHOULD BE "ULTRAGLAZE SSG4400 SILICON STRUCTURAL SEALANT" (BD REF: BD-SS-005).
   ALLOWABLE STRESS = 138kPa
   ii) QUALITY ASSURANCE DOCUMENT SUCH AS TEST REPORT/CERTIFICATES INDICATING COMPILES WITH ASTM E2190 OR EQUIVALENT WITH RESPECT TO THE SEAL PERFORMANCE FOR INSTALLING GLASS UNIT SHALL BE SUBMITTED TO BD PRIOR TO COMMENCE OF WORKS.

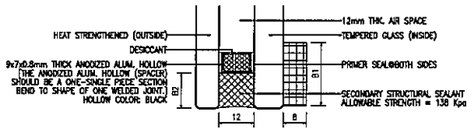

GLASS TYPE	G1 (TYP)	G1 (SU)	G2	G3
MAXIMUM WIDTH (mm)	1818	2105.5	1207.5	945
MAXIMUM HEIGHT (mm)	2333	2533	1643	2533
SEALANT BITE, B1 (mm)	29.5	36.5	13.5	13.5
SECONDARY SEAL, B2 (mm)	12	12	12	--

8. GASKET & SETTING BLOCK :
   a) ALL GASKET USED SHALL BE DENSE EXTRUDED SANTOPRENE WITH A HARDNESS OF 60°±5°.

   b) SETTING BLOCKS SHALL BE DENSE EXTRUDED SANTOPRENE WITH A HARDNESS OF 85°±5° DUROMETER SHORE A , A MIN. LENGTH OF 200 mm & A MIN. WIDTH CORRESPONDING TO THE GLASS THICKNESS & LOCATED AT GLASS 1/4 POINTS OR WHERE THE SETTING BLOCK SHOULD NOT BE CLOSER THAN 150mm TO GLASS EDGE.

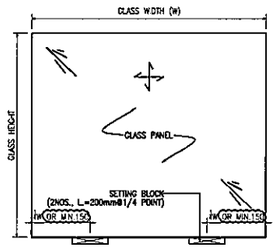

9. CAST-IN CHANNEL, CAST-IN BOLT AND CAST-IN EMBED
   a) CAST-IN EMBED SHALL BE GRADE 8.8 COMPLY TO DIN975 & NUT TO BE GRADE 8.8 COMPLY TO BE BS 4190.
   TENSILE STRENGTH = 560N/m
   SHEAR STRENGTH = 375N/m
   BEARING STRENGTH = 1000N/m

   b) CAST-IN ROD SHALL BE GRADE JO S275 G.M.S. ROD TO BS EN 10025. GR. S275: YIELD STRENGTH = 275 N/mm

   c) CAST-IN BRACKETS, STIFFENERS AND GUSSET PLATES TO BE GRADE S275 JO (CLASS 1) TO BS EN 10025.

~~(NOTE) a) ALL CAST-IN CHANNEL SHALL BE GRADE S235 G.M.S. ANCHOR CHANNEL~~
~~(NOTE) b) ALL T-HEAD BOLT USED TO BE "HILTI, HBC – C" – M16 (GRADE 8.8)~~
~~(NOTE) c) THE DESIGN & INSTALLATION OF "HILTI" ANCHOR CHANNEL & T-HEAD BOLT ARE STRICTLY IN ACCORDING WITH MANUFACTURER'S RECOMMENDATION~~

CHANNEL MODEL	BD REF. NO	MINIMUM DESIGN CRITERIA		RECOMMENDED LOAD (kN) (CRACKED CONCRETE)		PULL OUT TEST LOAD (kN) (1.5 x RECOMMENDED LOAD)
		CONCRETE THICKNESS (mm)	EDGE DISTANCE (UP/DOWN)(mm)	TENSION	SHEAR	
~~(NOTE) HAC 50~~	~~BD-AF134~~	~~250~~	~~150~~	~~27~~	~~72~~	~~32~~
~~(NOTE) HAC 70~~	~~BD-AF132~~	~~250~~	~~300~~	~~34.7~~	~~39.9~~	~~52.05~~

10. ANCHOR BOLT FOR ALUM. CLADDING
   a) ANCHOR BOLT TO BE "HILTI" TYPE, DESIGN AND INSTALLATION TO BE IN ACCORDANCE WITH MANUFACTURER SPECIFICATION.

ANCHOR TYPE (CRACKED CONCRETE)	BD REF. NO	MIN. EMBEDMENT DEPTH INTO SOUND CONCRETE (mm)	MIN. EDGE DISTANCE IN CONCRETE (mm)	MIN. SPACING IN CONCRETE (mm)	RECOMMENDED LOAD (kN) TENSION	RECOMMENDED LOAD (kN) SHEAR	TEST LOAD (mm) (1.5xRECOMMENDED TENSILE LOAD)
~~(NOTE) M8x75 HST3-R~~	~~BD-AF151~~	~~54~~	~~40~~	~~80~~	~~2.5~~	~~5.2~~	~~1.5x1.34(x2.5=5.032~~
M10x90 HST3-R	BD-AF149	78	45	90	4.0	8.4	1.5x1.180x4.0=7.080
~~(NOTE) M16x140 HST3-R~~	~~BD-AF148~~	~~93~~	~~60~~	~~70~~	~~8.2~~	~~16.6~~	~~1.5x1.180x8.2=14.691~~

11. FASTENERS
   a) ALL FASTENERS, BOLTS & NUTS SHALL BE STAINLESS STEEL GRADE A4-70 COMPLYING WITH BS EN ISO 3506.
   FOR GRADE A4-70
   MINIMUM YIELD STRENGTH, Ysb = 450 MPa
   ULTIMATE TENSILE STRENGTH, Usb = 700 MPa
   SHEAR STRENGTH, Psb = 311 MPa
   TENSILE STRENGTH, Ptb = 450 MPa
   BEARING STRENGTH, Pbb = 828 MPa

   b) UNLESS OTHER SPECIFIED, ALL SCREWS SHALL BE M6 AT 300 C/C GRADE A4-70 STAINLESS STEEL COMPLIED WITH BS EN ISO 3506. (FOR NON-EXPOSED AREA)

12. INSULATION
   a) FIRE STOP (BD REF. NO. BD-FS011)
   "CSR" FIRE SEAL FS60 (KNOWN AS CSR 60kg/m ROCKWOOD FIRESEAL BATT.), SHALL BE 135mm THK. AND NORMAL DENSITY OF 60kg/m³ (FOR FIRE RATING OF 2 HRS)

   b) THERMAL INSULATION
   "CSR" 110Kg/mm ROCKWOOL FIBERTEX-820.

   c) SMOKE SEAL
   "MIDI ALUMINIUM FABRICATOR LTD" SMOKE SEAL, SHALL BE COMPLY WITH FIRE CODE CLAUSE C10.2.

13. ISOLATION FOR METALS
   a) PLASTIC ISOLATION TAPE TO BE PROVIDED BETWEEN CONTACT SURFACE OF ALUMINIUM AND STEEL TO PREVENT DIRECT CONTACT BETWEEN DISSIMILAR METALS TO BS PD 6484: 1979.

14. OPENABLE WINDOWS
   i) ALL OPENABLE WINDOW SHALL BE CLOSED UNDER STRONG WIND CONDITION.
   ii) ALL OPENABLE WINDOW SHALL BE APPROVAL UNDER LOCKED CONDITION.

15. CONCRETE GRADE
   a) CONCRETE STRUCTURE SHOWN IN THE SUBMISSION SHALL BE OF GRADE 45D MINIMUM.

16. TYPICAL CONFIGURATION OF OPENABLE WINDOW IN LOCKED POSITION (FOR APPROVAL UNDER THIS SUBMISSION)

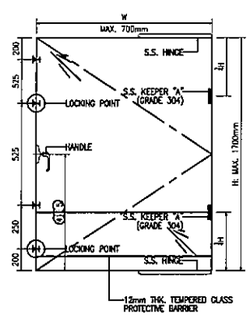

SIDE HUNG WINDOW

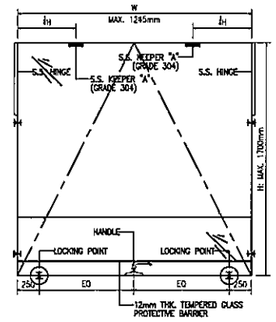

TOP HUNG WINDOW

LEGEND:

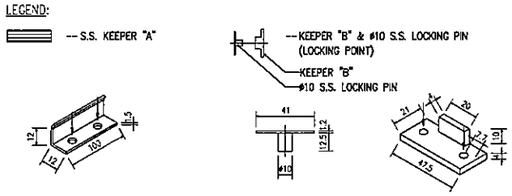

DETAIL DIMENSION OF S.S. ANGLE KEEPER "A"

DETAIL DIMENSION OF #10 S.S. LOCKING PIN

DETAIL DIMENSION OF KEEPER "B"

B.D. REF :

CLIENT :
信和置業有限公司
Sino Land Company Limited

ARCHITECT :
ronald lu & partners
Architects · Planners · Interior Designers
Ronald Lu & Partners (HK) Ltd.
呂元祥建築師事務所(香港)有限公司

MAIN CONTRACTOR :
Gammon

STRUCTURAL ENGINEER :
AECOM

FACADE CONSULTANT:
AECOM

NOTE :
1. ALL DIMENSIONS ARE IN mm.
2. ALL ELEVATIONS ARE VIEWED FROM OUTSIDE.
3. ALL DIMENSIONS TO BE VERIFIED ON SITE BEFORE FABRICATION.

LEGEND :
X1 — DETAIL MARK NO.
X001 — REFER SHEET NO.
1. F.F.L. --FINISHED FLOOR LEVEL
2. S.F.L. --STRUCTURAL FLOOR LEVEL
3. /R --REVERSED DETAIL

NO.	DATE	REVISED	BY
C	06/04/22	REVISED AS PER COMMENTS	LS
B	08/03/22	REVISED AS PER COMMENTS	LS
A	03/12/21	REVISED AS PER COMMENTS	LS

JOB NO. : J-858

PROJECT :
PROPOSED RESIDENTIAL DEVELOPMENT AT TKOTL 70RP, PHASE 11, LOHAS PARK TSEUNG KWAN O, N.T.

TITLE :
GENERAL NOTES FOR CURTAIN WALL

DATE : 04-OCT-21 | SCALE : 1:1

DRAWN BY : | CHECKED BY :

美特鋁質有限公司
MIDI ALUMINIUM FABRICATOR LTD.
Units 6-8, Sunray Industrial Centre, 1/F
610 Cha Kwo Ling Road, Kowloon
Tel:23489211-4 Fax:(852)27727666

DWG NO. : J858-CW-GN01 | REV. : C

ITEM No.	GLAZING COMPONENT	DESCRIPTION
GS01		G.E. ULTRA GLAZE SSG4400 STRUCTURAL GLAZING SEALANT COLOUR: BLACK (FACTORY)
GS02		DOW SIL 791 GLAZING SEALANT COLOUR: SILVER CHAMPAGNE & DARK GREY (SITE/FACTORY)
G01		WIPER GASKET MATERIAL : EPDM-S DUROMETER : HARDNESS SHORE 65±5 COLOUR : BLACK (FACTORY)
G02		WIPER GASKET MATERIAL : EPDM-S DUROMETER : HARDNESS SHORE 65±5 COLOUR : BLACK (FACTORY)
G03		SASH SPONGE GASKET MATERIAL : EPDM DUROMETER : HARDNESS SHORE 55±5 & 25±5 COLOUR: BLACK (FACTORY)
G04	14.9 / 4.5	WIPER GASKET MATERIAL : EPDM DUROMETER : HARDNESS SHORE 85±5 COLOUR : BLACK (FACTORY)
G04A	19.9 / 4.5	WIPER GASKET MATERIAL : EPDM DUROMETER : HARDNESS SHORE 85±5 COLOUR : BLACK (FACTORY)
G05	10.15 / 4.5	WIPER GASKET MATERIAL : EPDM DUROMETER : HARDNESS SHORE 85±5 COLOUR : BLACK (FACTORY)
G06		WIPER GASKET MATERIAL : EPDM-S DUROMETER : HARDNESS SHORE 70±5 COLOUR : BLACK (FACTORY)
G07		WIPER GASKET MATERIAL : EPDM DUROMETER : HARDNESS SHORE 85±5 COLOUR : BLACK (FACTORY)
G08		WIPER GASKET MATERIAL : EPDM DUROMETER : HARDNESS SHORE 70±5 COLOUR : BLACK (FACTORY)
G11	12 / 6	12x6mm CLOSED CELL FOAM BACKER ROD COLOUR: WHITE (FACTORY)
G12	ø6	ø6mm CLOSED CELL FOAM BACKER ROD COLOUR: WHITE (FACTORY)
G13	ø8	ø8mm CLOSED CELL FOAM BACKER ROD COLOUR: WHITE (FACTORY)

ITEM No.	GLAZING COMPONENT	DESCRIPTION
G14	ø12	ø12mm CLOSED CELL FOAM BACKER ROD COLOUR: WHITE (FACTORY)
G15	ø16	ø16mm CLOSED CELL FOAM BACKER ROD COLOUR: WHITE (FACTORY)
G16	ø10	ø10mm CLOSED CELL FOAM BACKER ROD COLOUR: WHITE (SITE)
G17	ø23	ø23mm CLOSED CELL FOAM BACKER ROD COLOUR: WHITE (SITE)
G21	12 / 8	12x8mmx200 LG. AT BOTH ENDS SETTING BLOCK MATERIAL : EPDM-S COLOR : BLACK (FACTORY)
G22	16 / 7	16x7mmx200 LG. AT 1/4 MODULE WIDTH SETTING BLOCK MATERIAL : EPDM-S COLOR : BLACK (FACTORY)
G23	36 / 8	8x36mmx200 LG. AT 1/4 MODULE WIDTH SETTING BLOCK MATERIAL : EPDM-S COLOR : BLACK (FACTORY)
G24	23	DELETED 12x23mmx100 LG. AT 1/4 MODULE WIDTH SETTING BLOCK MATERIAL : EPDM-S COLOR : BLACK (FACTORY)
G26	20 / 10	10x20mmx20 LG. AT MIDDLE & 1/4 MODULE WIDTH SETTING BLOCK MATERIAL : EPDM-S COLOR : BLACK (FACTORY)
G41	6 / 8	6x8mm THK. DOUBLE SIDE TAPE ADHESIVE (FACTORY)
G42	6 / 10	6x10mm THK. DOUBLE SIDE TAPE ADHESIVE (FACTORY)
G45	17 / 8	17x8mm THK. DOUBLE SIDE TAPE ADHESIVE (FACTORY)
G49	14.5 / 8	14.5x8mm THK. DOUBLE SIDE TAPE ADHESIVE (FACTORY)
G51	28 / 8	28x8mm THK. DOUBLE SIDE TAPE ADHESIVE (FACTORY)

ITEM No.	GLASS LIST	DESCRIPTION
G1	10 / 12 / 34 / 12	10mm THK. HEAT STRENGTHENED GLASS (OUTSIDE) +12mm AIR SPACE + 12mm THK. TEMPERED GLASS
G2	10 / 12 / 32 / 10	10mm THK. HEAT STRENGTHENED GLASS (OUTSIDE) +12mm AIR SPACE + 10mm THK. TEMPERED GLASS
G3	12	12mm THK. HEAT STRENGTHENED GLASS
G4	12	12mm THK. CLEAR TEMPERED GLASS (INTERNAL PROTECTIVE BARRIER)
G5	12	DELETED 12mm THK. CLEAR HEAT STRENGTHENED GLASS
GS1	10 / 9 / 10 / 29	DELETED 10mm THK. CLEAR TEMPERED GLASS
GS2	17.52 / 81.52	DELETED 8mm THK. CLEAR HEAT-STRENGTHENED GLASS +1.52mm PVB + 8mm THK. CLEAR HEAT-STRENGTHENED GLASS

ITEM No.	MISCELLANEOUS COMPONENT	DESCRIPTION
D01	3	3mm THK. ALUM. PANEL BACK PANEL FINISH: PVF2 COLOUR: SILVER CHAMPAGNE (FACTORY)
D02	2	DELETED 2mm THK. ALUM. PANEL FINISH: PVF2 COLOUR: CHAMPAGNE (FACTORY)
D03	3	3mm THK. ALUM. CLADDING FINISH: PVF2 COLOUR: SILVER CHAMPAGNE (SITE)
D04	3	CANCELLED 3mm THK. ALUM. CLADDING FINISH: CHROMATE (SITE)
D05	2	CANCELLED 2mm THK. ALUM. CLADDING FINISH: CHROMATE (SITE)
D06	1.5	1.5mm THK. ALUM. FLASHING FINISH: CHROMATE (SITE)
D07	3	DELETED 3mm THK. ALUM. PANEL BACK PANEL FINISH: PVF2 COLOUR: SILVER CHAMPAGNE (FACTORY)
S01	1	1mm THK. SILICONE SHEET (SITE)
L01		50mm THK. THERMAL INSULATION DENSITY : 110 Kg/m3 (FACTORY)
L02		FIRE SAFING INSULATION DENSITY : 60 Kg/m3 2 HRS FIRE RATED (SITE)
L03		DELETED 25mm THK. THERMAL INSULATION DENSITY : 110 Kg/m3 (FACTORY)
L04		25mm THK. ANTIDRUMMING MATERIAL (FACTORY)

B.D. REF :

CLIENT :
信和置業有限公司
Sino Land Company Limited

ARCHITECT :
ronald lu & partners
Architects, Planners, Interior Designers
Ronald Lu & Partners (HK) Ltd.
呂元祥建築師事務所(香港)有限公司

MAIN CONTRACTOR :
Gammon

STRUCTURAL ENGINEER :
AECOM

FACADE CONSULTANT:
AECOM

NOTE :
1. ALL DIMENSIONS ARE IN mm.
2. ALL ELEVATIONS ARE VIEWED FROM OUTSIDE.
3. ALL DIMENSIONS TO BE VERIFIED ON SITE BEFORE FABRICATION.

LEGEND :
- X1 / X001 — DETAIL MARK NO. / REFER SHEET NO.
1. F.F.L. --FINISHED FLOOR LEVEL
2. S.F.L. --STRUCTURAL FLOOR LEVEL
3. (R) --REVERSED DETAIL

NO.	DATE	REVISED	BY
D	26/05/22	REVISED AS PER COMMENTS	LS
C	06/04/22	REVISED AS PER COMMENTS	LS
B	22/02/22	REVISED AS PER COMMENTS	LS
A	03/12/21	REVISED AS PER COMMENTS	LS

JOB NO. : J-858

PROJECT :
PROPOSED RESIDENTIAL DEVELOPMENT
AT TKOTL 70RP, PHASE 11, LOHAS PARK
TSEUNG KWAN O, N.T.

TITLE :
MATERIAL LIST
FOR CURTAIN WALL

DATE : 22-OCT-21 | SCALE : 1:1(A1)

DRAWN BY : KY | CHECKED BY : YB

美特鋁質有限公司
MIDI ALUMINUM FABRICATOR LTD.
Units 6-8, Sunray Industrial Centre, 1/F
610 Cha Kwo Ling Road, Kowloon
Tel:23489211-4 Fax:(852)27727666

DWG NO. : J858-CW-CM01 | REV. : D

ITEM No.	GLAZING COMPONENT	DESCRIPTION
SDG01		WIPER GASKET MATERIAL : EPDM DUROMETER : HARDNESS SHORE 85±5 COLOUR : BLACK (FACTORY)
SDG02		WIPER GASKET MATERIAL : EPDM DUROMETER : HARDNESS SHORE 85±5 COLOUR : BLACK (FACTORY)
SDG03		WIPER GASKET MATERIAL : EPDM DUROMETER : HARDNESS SHORE 85±5 COLOUR : BLACK (FACTORY)
SDG04		WIPER GASKET MATERIAL : EPDM DUROMETER : HARDNESS SHORE 85±5 COLOUR : BLACK (FACTORY)
SDG05		WIPER GASKET MATERIAL : EPDM DUROMETER : HARDNESS SHORE 85±5 COLOUR : BLACK (FACTORY)
SDG06		WIPER GASKET MATERIAL : EPDM DUROMETER : HARDNESS SHORE 85±5 COLOUR : BLACK (FACTORY)

B.D. REF :

CLIENT :
信和置業有限公司
Sino Land Company Limited

ARCHITECT :
ronald lu & partners
Architects . Planners . Interior Designers
Ronald Lu & Partners (HK) Ltd.
呂元祥建築師事務所(香港)有限公司

MAIN CONTRACTOR :
Gammon

STRUCTURAL ENGINEER :
AECOM

FACADE CONSULTANT:
AECOM

NOTE :
1. ALL DIMENSIONS ARE IN mm.
2. ALL ELEVATIONS ARE VIEWED FROM OUTSIDE.
3. ALL DIMENSIONS TO BE VERIFIED ON SITE BEFORE FABRICATION.

LEGEND :
X1 — DETAIL MARK NO.
X001 — REFER SHEET NO.

1. F.F.L. --FINISHED FLOOR LEVEL
2. S.F.L. --STRUCTURAL FLOOR LEVEL
3. /R --REVERSED DETAIL

NO.	DATE	REVISED	BY

JOB NO. : J-858

PROJECT :
PROPOSED RESIDENTIAL DEVELOPMENT
AT TKOTL 70RP, PHASE 11, LOHAS PARK
TSEUNG KWAN O, N.T.

TITLE :
MATERIAL LIST
FOR CURTAIN WALL

DATE : 22-OCT-21	SCALE : 1:1(A1)
DRAWN BY : KY	CHECKED BY : YB

美特鋁質有限公司
MIDI ALUMINIUM FABRICATOR LTD.
Units 6-8, Sunray Industrial Centre, 1/F
610 Cha Kwo Ling Road, Kowloon
Tel:23489211-4 Fax:(852)27727666

DWG NO. : J858-CW-CM01A | REV. : -

ITEM No.	FASTENER DIAGRAM	DESCRIPTION
F01		ST6.3x38mm LG. PAN HEAD SELF TAPPING SCREW STAINLESS STEEL GR. A4-70 (FACTORY)
F02		ST6.3x50mm LG. PAN HEAD SELF TAPPING SCREW STAINLESS STEEL GR. A4-70 (FACTORY)
F03		ST4.2x12mm LG. PAN HEAD SELF TAPPING SCREW STAINLESS STEEL GR. A4-70 (FACTORY)
F04	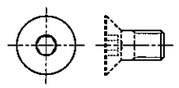	M10x20mm LG. FLAT HEAD MACHINE SCREW STAINLESS STEEL GR. A4-70 (FACTORY)
F05		M4x16mm LG. PAN HEAD MACHINE SCREW STAINLESS STEEL GR. A4-70 (FACTORY)
F06		ST4.2x25mm LG. PAN HEAD SELF TAPPING SCREW STAINLESS STEEL GR. A4-70 (FACTORY)
F07	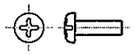	M5x15mm LG. PAN HEAD MACHINE SCREW STAINLESS STEEL GR. A4-70 (FACTORY)
F08	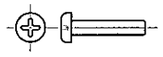	M5x20mm LG. PAN HEAD MACHINE SCREW STAINLESS STEEL GR. A4-70 (FACTORY)
F09	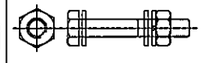	M12x45mm LG. HEX HEAD BOLT c/w NUT & SPRING WASHER STAINLESS STEEL GR. A4-70 (FACTORY)
F10	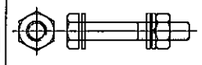	M16x75mm LG. HEX HEAD BOLT c/w NUT & SPRING WASHER STAINLESS STEEL GR. 8.8 (FACTORY)
F11	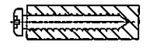	M5x25 S.S. SELF-TAPPING SCREW W./PLASTIC PLUG (SITE)
F12	DELETED	"HILTI" X-C27 P8 FASTENER PIN (FACTORY)
F13	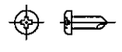	ST4.8x12mm LG. PAN HEAD SELF DRILL SCREW STAINLESS STEEL GR. A4-70 (SITE)
F14	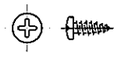	ST4.8x12mm LG. PAN HEAD SELF TAPPING SCREW STAINLESS STEEL GR. A4-70 (FACTORY)

ITEM No.	FASTENER DIAGRAM	DESCRIPTION
F15	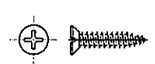	ST6.3x32mm LG. FLAT HEAD SELF TAPPING SCREW STAINLESS STEEL GR. A4-70 (FACTORY)
F16	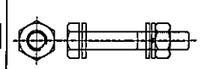	M8x75mm LG. HEX HEAD BOLT c/w NUT & SPRING WASHER STAINLESS STEEL GR. A4-70 (SITE)
F17	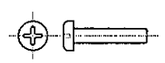	M5x35mm LG. PAN HEAD MACHINE SCREW STAINLESS STEEL GR. A4-70 (FACTORY)
F18	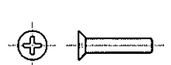	M5x20mm LG. FLAT HEAD MACHINE SCREW STAINLESS STEEL GR. A4-70 (FACTORY)
F19	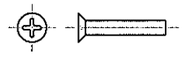	M5x30mm LG. FLAT HEAD MACHINE SCREW STAINLESS STEEL GR. A4-70 (FACTORY)
F20	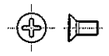	M5x10mm LG. FLAT HEAD MACHINE SCREW STAINLESS STEEL GR. A4-70 (FACTORY)
F21	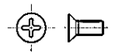	M5x12mm LG. FLAT HEAD MACHINE SCREW STAINLESS STEEL GR. A4-70 (FACTORY)
F22	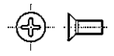	M5x15mm LG. FLAT HEAD MACHINE SCREW STAINLESS STEEL GR. A4-70 (FACTORY)
F23	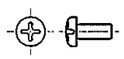	M5x12mm LG. PAN HEAD MACHINE SCREW STAINLESS STEEL GR. A4-70 (FACTORY)
F24	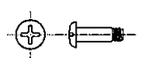	M5x16mm LG. PAN HEAD MACHINE SCREW STAINLESS STEEL GR. A4-70 (FACTORY)
F25	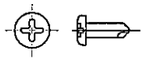	ST4.8x15mm LG. PAN HEAD SELF DRILL SCREW STAINLESS STEEL GR. A4-70 (SITE)
F26		M5x25mm LG. PAN HEAD MACHINE SCREW STAINLESS STEEL GR. A4-70 (FACTORY)
F27	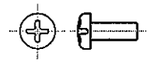	M6x16mm LG. PAN HEAD MACHINE SCREW STAINLESS STEEL GR. A4-70 (SITE)
F09A	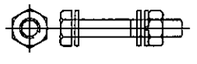	M12x80mm LG. HEX HEAD BOLT c/w NUT & SPRING WASHER STAINLESS STEEL GR. A4-70 (FACTORY)

ITEM No.	FASTENER DIAGRAM	DESCRIPTION
F51	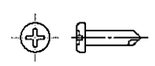	ST5.5x19mm LG. PAN HEAD SELF DRILL SCREW STAINLESS STEEL GR. A4-70 (SITE)
F52	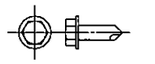	ST5.5x15mm LG. HEX. HEAD SELF DRILL SCREW STAINLESS STEEL GR. A4-70 (SITE)
F53	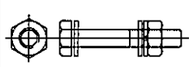	M6x100mm LG. HEX HEAD BOLT c/w NUT & SPRING WASHER STAINLESS STEEL GR. A4-70 (SITE)
F54	CANCELLED	M16x50mm LG. HEX HEAD BOLT GR. 8.8 (SITE)
F55	CANCELLED	M12x45mm LG. HEX HEAD BOLT c/w NUT & SPRING WASHER STAINLESS STEEL GR. A4-70 (SITE)
F56	CANCELLED	M5x15mm LG. PAN HEAD MACHINE SCREW STAINLESS STEEL GR. A4-70 (SITE)
F57	CANCELLED	M6x15mm LG. PAN HEAD MACHINE SCREW STAINLESS STEEL GR. A4-70 (SITE)
F58	CANCELLED	M14x25mm LG. PAN HEAD SELF-TAPPING SCREW STAINLESS STEEL GR. A4-70 (FACTORY)
F59	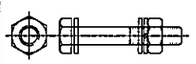	M8x25mm LG. HEX HEAD BOLT c/w NUT & SPRING WASHER STAINLESS STEEL GR. A4-70 (SITE)
Z001	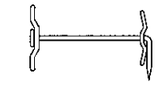	METAL PIN FOR INSULATION MATERIAL: GALVANISED STEEL COLOR: SILVER

ITEM No.	FASTENER DIAGRAM	DESCRIPTION
FA01	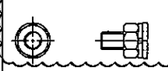	M6 ALUM. STUD BOLT : AW-5754[Al Mg3] NUT : GR. A4-80 1-SPRING WASHER : GR. A4 1-FLAT WASHER : GR. A4 (FACTORY)
FA02	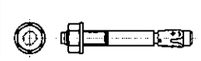	M10x90mm LG. "HILTI ANCHOR BOLT STAINLESS STEEL GR. A4 (SITE)
FA03	CANCELLED	M16x140mm LG. "HILTI ANCHOR BOLT STAINLESS STEEL GR. A4 (SITE)
HA01	DELETED	HILTI HAC-70 CAST-IN CHANNEL (L=450) (SITE)
HA02	DELETED	HILTI HAC-70 CAST-IN CHANNEL (L=350) (SITE)
HA03	DELETED	M16x50mm LG. HEX HEAD BOLT 8.8 C/W NUT & SPRING WASHER (SITE)

B.D. REF :

CLIENT :
信和置業有限公司
Sino Land Company Limited

ARCHITECT :
ronald lu & partners
Architects · Planners · Interior Designers
Ronald Lu & Partners (HK) Ltd.
呂元祥建築師事務所(香港)有限公司

MAIN CONTRACTOR :
Gammon

STRUCTURAL ENGINEER :
AECOM

FACADE CONSULTANT:
AECOM

NOTE :
1. ALL DIMENSIONS ARE IN mm.
2. ALL ELEVATIONS ARE VIEWED FROM OUTSIDE.
3. ALL DIMENSIONS TO BE VERIFIED ON SITE BEFORE FABRICATION.

LEGEND :
- X1 / X001 — DETAIL MARK NO. / REFER SHEET NO.
1. F.F.L. --FINISHED FLOOR LEVEL
2. S.F.L. --STRUCTURAL FLOOR LEVEL
3. (R) --REVERSED DETAIL

NO.	DATE	REVISED	BY
C	06/04/22	REVISED AS PER COMMENTS	LS
B	22/02/22	REVISED AS PER COMMENTS	LS
A	03/12/21	REVISED AS PER COMMENTS	LS

JOB NO. : J-858

PROJECT :
PROPOSED RESIDENTIAL DEVELOPMENT
AT TKOTL 70RP, PHASE 11, LOHAS PARK
TSEUNG KWAN O, N.T.

TITLE :
MATERIAL LIST
FOR CURTAIN WALL

DATE : 22-OCT-21 | SCALE : 1:1(A1)

DRAWN BY : KY | CHECKED BY : YB

美特鋁質有限公司
MIDI ALUMINIUM FABRICATOR LTD.
Units 6-8, Sunray Industrial Centre, 1/F
610 Cha Kwo Ling Road, Kowloon
Tel:23489211-4 Fax:(852)27727666

DWG NO. : J85B-CW-CM02 | REV. : C

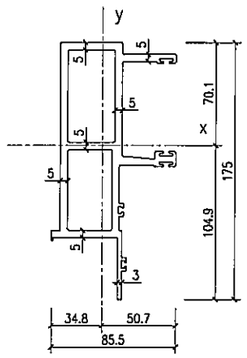

DIE SECTION	MULLION (M1)	SECTION MODULUS(cm³)	Zx	48.79
			Zy	22.47
MATERIAL	6063-T6	MOMENT OF INERTIA (cm⁴)	Ix	511.64
DIE NO.	–		Iy	113.98

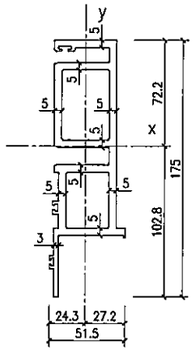

DIE SECTION	MULLION (M2)	SECTION MODULUS(cm³)	Zx	46.9
			Zy	20.93
MATERIAL	6063-T6	MOMENT OF INERTIA (cm⁴)	Ix	481.9
DIE NO.	–		Iy	156.97

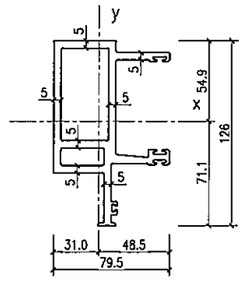

DIE SECTION	MULLION (M3)	SECTION MODULUS(cm³)	Zx	35.47
			Zy	19
MATERIAL	6063-T6	MOMENT OF INERTIA (cm⁴)	Ix	252.09
DIE NO.	–		Iy	92.14

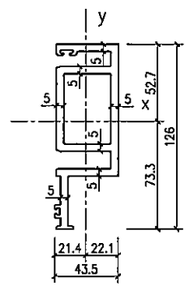

DIE SECTION	MULLION (M4)	SECTION MODULUS(cm³)	Zx	29.07
			Zy	17.79
MATERIAL	6063-T6	MOMENT OF INERTIA (cm⁴)	Ix	213.02
DIE NO.	–		Iy	39.41

DIE SECTION	MULLION (M5)	SECTION MODULUS(cm³)	Zx	49.93
			Zy	31.66
MATERIAL	6063-T6	MOMENT OF INERTIA (cm⁴)	Ix	362.56
DIE NO.	–		Iy	171.42

DIE SECTION	MULLION (M6)	SECTION MODULUS(cm³)	Zx	66.08
			Zy	50.29
MATERIAL	6063-T6	MOMENT OF INERTIA (cm⁴)	Ix	686.8
DIE NO.	–		Iy	288.13

DIE SECTION	MULLION (CM1)	SECTION MODULUS(cm³)	Zx	107.94
			Zy	106.87
MATERIAL	6063-T6	MOMENT OF INERTIA (cm⁴)	Ix	1450.5
DIE NO.	–		Iy	1206

DIE SECTION	MULLION (CM2)	SECTION MODULUS(cm³)	Zx	83.31
			Zy	94.06
MATERIAL	6063-T6	MOMENT OF INERTIA (cm⁴)	Ix	944.66
DIE NO.	–		Iy	1309.18

DIE SECTION	Buckling Clip(BC01)	SECTION MODULUS(cm³)	Zx	0.666
			Zy	2.663
MATERIAL	6063-T5	MOMENT OF INERTIA (cm⁴)	Ix	0.46
DIE NO.	–		Iy	7.97

DIE SECTION	Buckling Clip(BC02)	SECTION MODULUS(cm³)	Zx	0.08
			Zy	0.42
MATERIAL	6063-T5	MOMENT OF INERTIA (cm⁴)	Ix	0.02
DIE NO.	–		Iy	0.86

DIE SECTION	SASH(S1)	SECTION MODULUS(cm³)	Zx	4.86
			Zy	3.95
MATERIAL	6063-T5	MOMENT OF INERTIA (cm⁴)	Ix	23.23
DIE NO.	–		Iy	8.66

DIE SECTION	SASH(S2)	SECTION MODULUS(cm³)	Zx	4.87
			Zy	5.04
MATERIAL	6063-T5	MOMENT OF INERTIA (cm⁴)	Ix	23.27
DIE NO.	–		Iy	12.91

B.D. REF :

CLIENT :
信和置業有限公司
Sino Land Company Limited

ARCHITECT :
ronald lu & partners
Architects · Planners · Interior Designers
Ronald Lu & Partners (HK) Ltd.
呂元祥建築師事務所(香港)有限公司

MAIN CONTRACTOR :
Gammon

STRUCTURAL ENGINEER :
AECOM

FACADE CONSULTANT:
AECOM

NOTE :
1. ALL DIMENSIONS ARE IN mm.
2. ALL ELEVATIONS ARE VIEWED FROM OUTSIDE.
3. ALL DIMENSIONS TO BE VERIFIED ON SITE BEFORE FABRICATION.

LEGEND :
X1 — DETAIL MARK NO.
K001 — REFER SHEET NO.

1. F.F.L. --FINISHED FLOOR LEVEL
2. S.F.L. --STRUCTURAL FLOOR LEVEL
3. /R --REVERSED DETAIL

NO.	DATE	REVISED	BY
E	24/05/22	REVISED AS PER COMMENTS	LS
D	06/04/22	REVISED AS PER COMMENTS	LS
C	15/02/22	REVISED AS PER COMMENTS	LS
B	25/01/22	REVISED AS PER COMMENTS	LS
A	23/12/21	REVISED AS PER COMMENTS	LS

JOB NO. : J-858

PROJECT :
PROPOSED RESIDENTIAL DEVELOPMENT
AT TKOTL 70RP, PHASE 11, LOHAS PARK
TSEUNG KWAN O, N.T.

TITLE :
DIE LIST
FOR CURTAIN WALL

DATE : 22-OCT-21 | SCALE : 1:2(A1)

DRAWN BY : KY | CHECKED BY : YB

美特鋁質有限公司
MIDI ALUMINIUM FABRICATOR LTD.
Units 6-8, Sunray Industrial Centre, 1/F
610 Cha Kwo Ling Road, Kowloon
Tel:23489211-4 Fax:(852)27727666

DWG NO. : J858-CW-DL01 | REV. : E

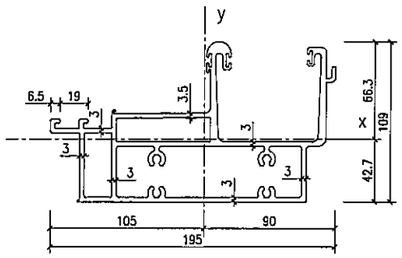

DIE SECTION	TRANSOM (T1)	SECTION MODULUS(cm³)	Zx	38.59
			Zy	79.29
MATERIAL	6063-T6	MOMENT OF INERTIA (cm⁴)	Ix	255.73
DIE NO.	-		Iy	832.83

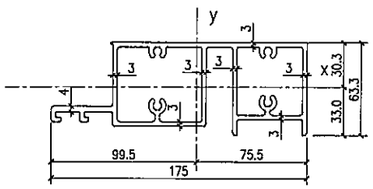

DIE SECTION	TRANSOM (T2)	SECTION MODULUS(cm³)	Zx	25.99
			Zy	47.19
MATERIAL	6063-T6	MOMENT OF INERTIA (cm⁴)	Ix	84.93
DIE NO.	-		Iy	469.69

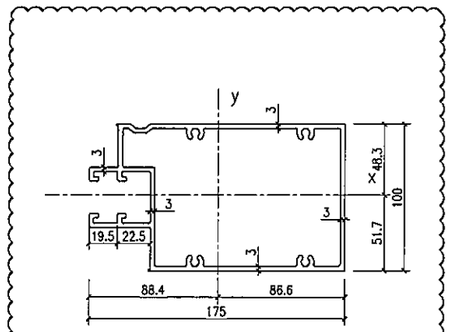

DIE SECTION	TRANSOM (T3)	SECTION MODULUS(cm³)	Zx	57.12
			Zy	77.1
MATERIAL	6063-T6	MOMENT OF INERTIA (cm⁴)	Ix	295.36
DIE NO.	-		Iy	681.6

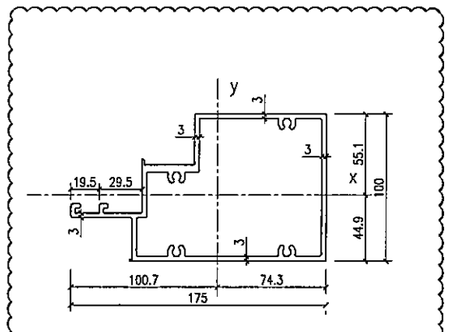

DIE SECTION	TRANSOM (T4)	SECTION MODULUS(cm³)	Zx	42.38
			Zy	49.02
MATERIAL	6063-T6	MOMENT OF INERTIA (cm⁴)	Ix	233.48
DIE NO.	-		Iy	493.74

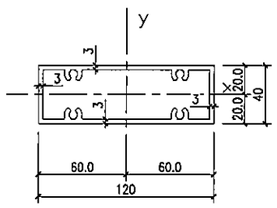

DIE SECTION	TRANSOM (T5)	SECTION MODULUS(cm³)	Zx	15.21
			Zy	30.53
MATERIAL	6063-T6	MOMENT OF INERTIA (cm⁴)	Ix	30.42
DIE NO.	-		Iy	183.19

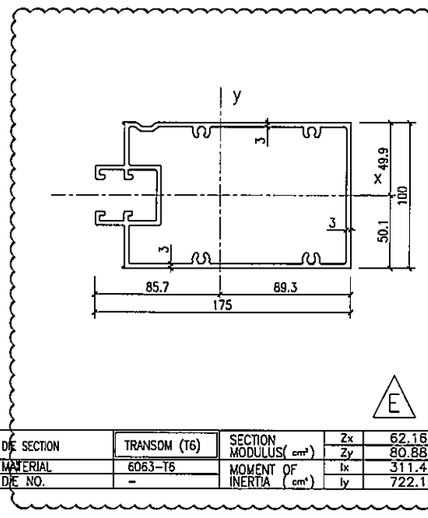

DIE SECTION	TRANSOM (T6)	SECTION MODULUS(cm³)	Zx	62.16
			Zy	80.88
MATERIAL	6063-T6	MOMENT OF INERTIA (cm⁴)	Ix	311.47
DIE NO.	-		Iy	722.19

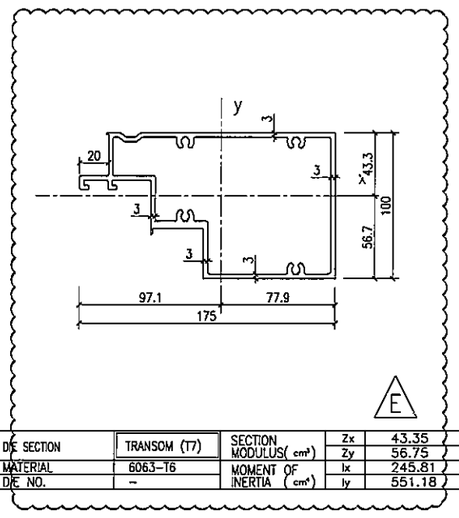

DIE SECTION	TRANSOM (T7)	SECTION MODULUS(cm³)	Zx	43.35
			Zy	56.75
MATERIAL	6063-T6	MOMENT OF INERTIA (cm⁴)	Ix	245.81
DIE NO.	-		Iy	551.18

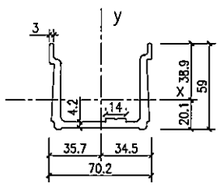

DIE SECTION	GUTTER SLEEVE (GS1)	SECTION MODULUS(cm³)	Zx	6.68
			Zy	17.25
MATERIAL	6061-T6	MOMENT OF INERTIA (cm⁴)	Ix	25.96
DIE NO.	-		Iy	61.51

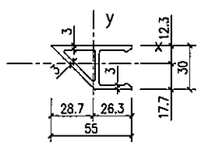

DIE SECTION	ATTACHMENT (A1)	SECTION MODULUS(cm³)	Zx	2.82
			Zy	2.69
MATERIAL	6063-T5	MOMENT OF INERTIA (cm⁴)	Ix	4.98
DIE NO.	-		Iy	7.73

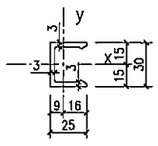

DIE SECTION	ATTACHMENT (A2)	SECTION MODULUS(cm³)	Zx	2.08
			Zy	0.87
MATERIAL	6063-T5	MOMENT OF INERTIA (cm⁴)	Ix	3.12
DIE NO.	-		Iy	1.39

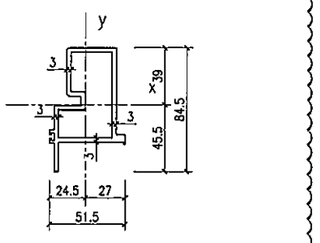

DIE SECTION	ATTACHMENT (A3)	SECTION MODULUS(cm³)	Zx	9.56
			Zy	7.15
MATERIAL	6063-T6	MOMENT OF INERTIA (cm⁴)	Ix	43.52
DIE NO.	-		Iy	19.33

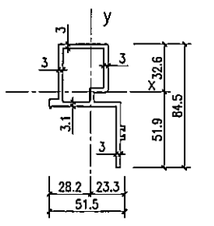

DIE SECTION	ATTACHMENT (A4)	SECTION MODULUS(cm³)	Zx	6.02
			Zy	5.72
MATERIAL	6063-T5	MOMENT OF INERTIA (cm⁴)	Ix	31.23
DIE NO.	-		Iy	16.16

B.D. REF :

CLIENT :
信和置業有限公司
Sino Land Company Limited

ARCHITECT :
ronald lu & partners
Architects · Planners · Interior Designers
Ronald Lu & Partners (HK) Ltd.
呂元祥建築師事務所(香港)有限公司

MAIN CONTRACTOR :
Gammon

STRUCTURAL ENGINEER :
AECOM

FACADE CONSULTANT:
AECOM

NOTE :
1. ALL DIMENSIONS ARE IN mm.
2. ALL ELEVATIONS ARE VIEWED FROM OUTSIDE.
3. ALL DIMENSIONS TO BE VERIFIED ON SITE BEFORE FABRICATION.

LEGEND :
X1 — DETAIL MARK NO.
X001 — REFER SHEET NO.

1. F.F.L. --FINISHED FLOOR LEVEL
2. S.F.L. --STRUCTURAL FLOOR LEVEL
3. (R) --REVERSED DETAIL

NO.	DATE	REVISED	BY
E	24/05/22	REVISED AS PER COMMENTS	LS
D	06/04/22	REVISED AS PER COMMENTS	LS
C	15/02/22	REVISED AS PER COMMENTS	LS
B	23/12/21	REVISED AS PER COMMENTS	LS
A	03/12/21	REVISED AS PER COMMENTS	LS

JOB NO. : J-858

PROJECT :
PROPOSED RESIDENTIAL DEVELOPMENT
AT TKOTL 70RP, PHASE 11, LOHAS PARK
TSEUNG KWAN O, N.T.

TITLE :
DIE LIST
FOR CURTAIN WALL

DATE : 22-OCT-21 | SCALE : 1:2(A1)

DRAWN BY : KY | CHECKED BY : YB

美特鋁質有限公司
MIDI ALUMINIUM FABRICATOR LTD.
Units 6-8, Sunray Industrial Centre, 1/F
610 Cho Kwo Ling Road, Kowloon
Tel:23489211-4 Fax:(852)27727666

DWG NO. : J858-CW-DL02 | REV. : E

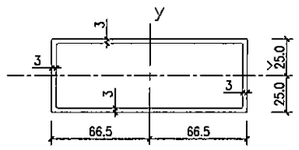

DIE SECTION	ATTACHMENT (A5)	SECTION MODULUS(cm³)	Zx	19.36
			Zy	34.47
MATERIAL	6063-T6	MOMENT OF INERTIA (cm⁴)	Ix	48.39
DIE NO.	–		Iy	229.24

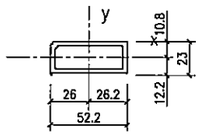

DIE SECTION	ATTACHMENT (A6)	SECTION MODULUS(cm³)	Zx	2.38
			Zy	4.89
MATERIAL	6063-T5	MOMENT OF INERTIA (cm⁴)	Ix	2.9
DIE NO.	–		Iy	12.81

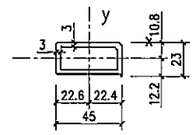

DIE SECTION	ATTACHMENT (A7)	SECTION MODULUS(cm³)	Zx	2.07
			Zy	3.86
MATERIAL	6063-T5	MOMENT OF INERTIA (cm⁴)	Ix	2.52
DIE NO.	–		Iy	8.71

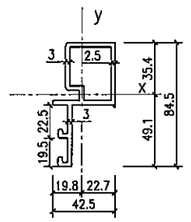

DIE SECTION	ATTACHMENT (A8)	SECTION MODULUS(cm³)	Zx	7.85
			Zy	4.57
MATERIAL	6063-T6	MOMENT OF INERTIA (cm⁴)	Ix	38.56
DIE NO.	–		Iy	10.39

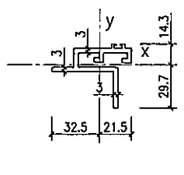

DIE SECTION	GLAZING(GA1)	SECTION MODULUS(cm³)	Zx	1.456
			Zy	2.518
MATERIAL	6063-T5	MOMENT OF INERTIA (cm⁴)	Ix	4.32
DIE NO.	–		Iy	8.17

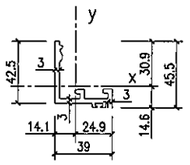

DIE SECTION	GLAZING(GA2)	SECTION MODULUS(cm³)	Zx	1.76
			Zy	2.35
MATERIAL	6063-T5	MOMENT OF INERTIA (cm⁴)	Ix	5.42
DIE NO.	–		Iy	5.86

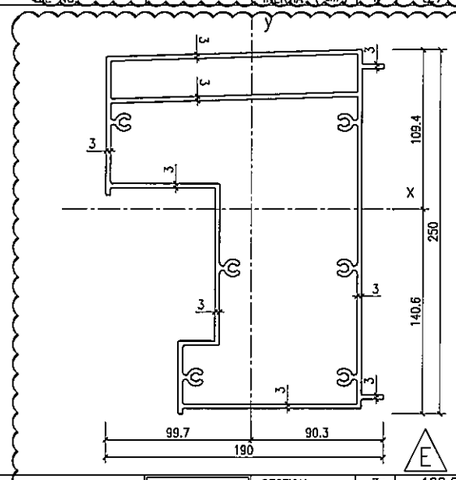

DIE SECTION	FEATURE (F1)	SECTION MODULUS(cm³)	Zx	198.57
			Zy	138.56
MATERIAL	6063-T6	MOMENT OF INERTIA (cm⁴)	Ix	2790.99
DIE NO.	–		Iy	1381.47

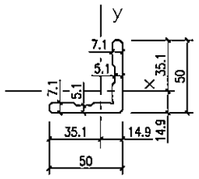

DIE SECTION	CORNER BLOCK	SECTION MODULUS(cm³)	Zx	3.98
			Zy	3.98
MATERIAL	6063-T5	MOMENT OF INERTIA (cm⁴)	Ix	13.95
DIE NO.	–		Iy	13.95

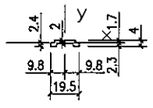

DIE SECTION	SLIDE BAR	SECTION MODULUS(cm³)	Zx	0.02
			Zy	0.17
MATERIAL	6063-T5	MOMENT OF INERTIA (cm⁴)	Ix	0.0056
DIE NO.	–		Iy	0.16

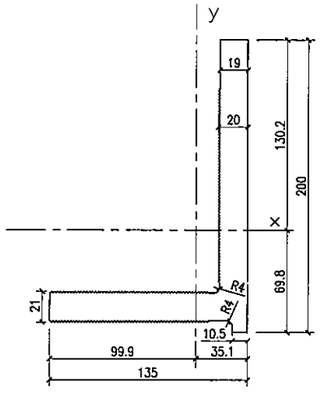

DIE SECTION	BRACKET (B1)	SECTION MODULUS(cm³)	Zx	172.14
			Zy	92.76
MATERIAL	6061-T6	MOMENT OF INERTIA (cm⁴)	Ix	2241.39
DIE NO.	–		Iy	926.36

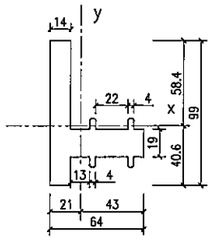

DIE SECTION	BRACKET (B2)	SECTION MODULUS(cm³)	Zx	24.53
			Zy	20.18
MATERIAL	6061-T6	MOMENT OF INERTIA (cm⁴)	Ix	143.2
DIE NO.	–		Iy	86.74

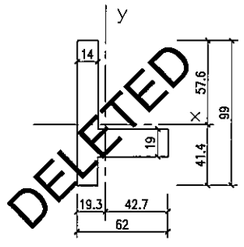

DELETED

DIE SECTION	BRACKET (B3)	SECTION MODULUS(cm³)	Zx	24.13
			Zy	17.01
MATERIAL	6061-T6	MOMENT OF INERTIA (cm⁴)	Ix	139.06
DIE NO.	–		Iy	72.63

B.D. REF :

CLIENT :
信和置業有限公司
Sino Land Company Limited

ARCHITECT :
ronald lu & partners
Architects Planners Interior Designers
Ronald Lu & Partners (HK) Ltd.
呂元祥建築師事務所(香港)有限公司

MAIN CONTRACTOR :
Gammon

STRUCTURAL ENGINEER :
AECOM

FACADE CONSULTANT:
AECOM

NOTE :
1. ALL DIMENSIONS ARE IN mm.
2. ALL ELEVATIONS ARE VIEWED FROM OUTSIDE.
3. ALL DIMENSIONS TO BE VERIFIED ON SITE BEFORE FABRICATION.

LEGEND :
X1 / XD01 — DETAIL MARK NO. / REFER SHEET NO.
1. F.F.L. -- FINISHED FLOOR LEVEL
2. S.F.L. -- STRUCTURAL FLOOR LEVEL
3. /R -- REVERSED DETAIL

NO.	DATE	REVISED	BY
E	24/05/22	REVISED AS PER COMMENTS	LS
D	06/04/22	REVISED AS PER COMMENTS	LS
C	15/02/22	REVISED AS PER COMMENTS	LS
B	23/12/21	REVISED AS PER COMMENTS	LS
A	03/12/21	REVISED AS PER COMMENTS	LS

JOB NO. : J-858

PROJECT :
PROPOSED RESIDENTIAL DEVELOPMENT
AT TKOTL 70RP, PHASE 11, LOHAS PARK
TSEUNG KWAN O, N.T.

TITLE :
DIE LIST
FOR CURTAIN WALL

DATE : 22-OCT-21 | SCALE : 1:2(A1)

DRAWN BY : KY | CHECKED BY : YB

美特鋁質有限公司
MIDI ALUMINUM FABRICATOR LTD.
Units 6-8, Sunray Industrial Centre, 1/F
610 Cha Kwo Ling Road, Kowloon
Tel:23489211-4 Fax:(852)27727666

DWG NO. : J858-CW-DL03 | REV. : E

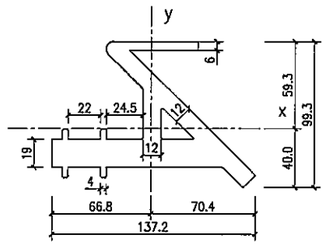

DIE SECTION	BRACKET (B4)	SECTION MODULUS(cm³)	Zx	50.67
			Zy	61.81
MATERIAL	6061-T6	MOMENT OF INERTIA (cm⁴)	Ix	300.27
DIE NO.	–		Iy	435.29

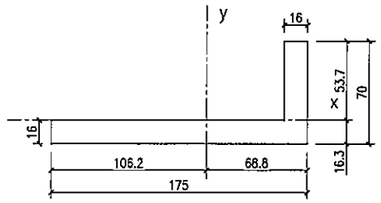

DIE SECTION	BRACKET (B5)	SECTION MODULUS(cm³)	Zx	20.07
			Zy	106.7
MATERIAL	6061-T6	MOMENT OF INERTIA (cm⁴)	Ix	107.85
DIE NO.	–		Iy	1133.73

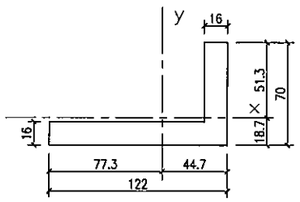

DIE SECTION	BRACKET (B6)	SECTION MODULUS(cm³)	Zx	19.22
			Zy	53.35
MATERIAL	6061-T6	MOMENT OF INERTIA (cm⁴)	Ix	98.53
DIE NO.	–		Iy	412.19

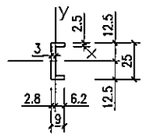

DIE SECTION	BRACKET (B7)	SECTION MODULUS(cm³)	Zx	0.62
			Zy	0.09
MATERIAL	6061-T6	MOMENT OF INERTIA (cm⁴)	Ix	0.77
DIE NO.	–		Iy	0.06

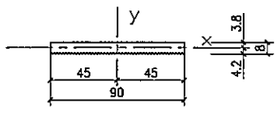

DIE SECTION	BRACKET (B8)	SECTION MODULUS(cm³)	Zx	0.75
			Zy	10.12
MATERIAL	6061-T6	MOMENT OF INERTIA (cm⁴)	Ix	0.32
DIE NO.	–		Iy	45.56

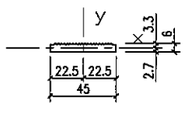

DIE SECTION	BRACKET (B9)	SECTION MODULUS(cm³)	Zx	0.19
			Zy	1.8
MATERIAL	6061-T6	MOMENT OF INERTIA (cm⁴)	Ix	0.06
DIE NO.	–		Iy	4.06

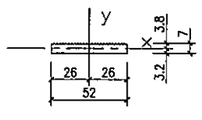

DIE SECTION	BRACKET (B10)	SECTION MODULUS(cm³)	Zx	0.32
			Zy	2.9
MATERIAL	6061-T6	MOMENT OF INERTIA (cm⁴)	Ix	0.12
DIE NO.	–		Iy	7.55

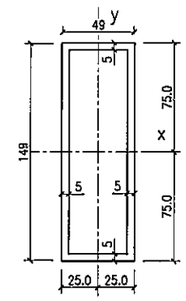

DIE SECTION	MULLION (SM1)	SECTION MODULUS(cm³)	Zx	65.53
			Zy	32.63
MATERIAL	6063-T6	MOMENT OF INERTIA (cm⁴)	Ix	491.48
DIE NO.	–		Iy	81.57

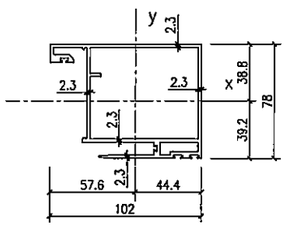

DIE SECTION	MULLION (SM2)	SECTION MODULUS(cm³)	Zx	24.02
			Zy	18.86
MATERIAL	6063-T6	MOMENT OF INERTIA (cm⁴)	Ix	94.07
DIE NO.	–		Iy	108.72

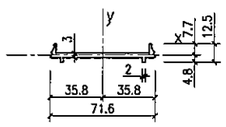

DIE SECTION	ATTACHMENT (SA1)	SECTION MODULUS(cm³)	Zx	0.1
			Zy	3.5
MATERIAL	6063-T5	MOMENT OF INERTIA (cm⁴)	Ix	0.079
DIE NO.	–		Iy	12.58

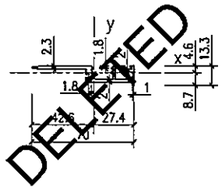

DIE SECTION	ATTACHMENT (SA2)	SECTION MODULUS(cm³)	Zx	0.42
			Zy	2.03
MATERIAL	6063-T6	MOMENT OF INERTIA (cm⁴)	Ix	0.36
DIE NO.	–		Iy	8.66

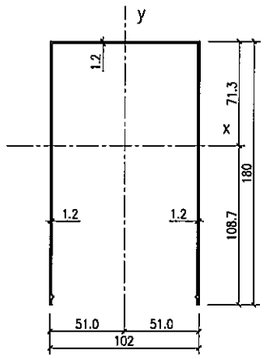

DIE SECTION	COVER (SC1)	SECTION MODULUS(cm³)	Zx	17.97
			Zy	23.63
MATERIAL	6063-T5	MOMENT OF INERTIA (cm⁴)	Ix	195.35
DIE NO.	–		Iy	120.5

B.D. REF :

CLIENT :
信和置業有限公司
Sino Land Company Limited

ARCHITECT :
ronald lu & partners
Architects · Planners · Interior Designers
Ronald Lu & Partners (HK) Ltd.
呂元祥建築師事務所(香港)有限公司

MAIN CONTRACTOR :
Gammon

STRUCTURAL ENGINEER :
AECOM

FACADE CONSULTANT:
AECOM

NOTE :
1. ALL DIMENSIONS ARE IN mm.
2. ALL ELEVATIONS ARE VIEWED FROM OUTSIDE.
3. ALL DIMENSIONS TO BE VERIFIED ON SITE BEFORE FABRICATION.

LEGEND :
X1 / X001 — DETAIL MARK NO. / REFER SHEET NO.
1. F.F.L. --FINISHED FLOOR LEVEL
2. S.F.L. --STRUCTURAL FLOOR LEVEL
3. /R --REVERSED DETAIL

NO.	DATE	REVISED	BY
D	15/02/22	REVISED AS PER COMMENTS	LS
C	15/02/22	REVISED AS PER COMMENTS	LS
B	23/12/21	REVISED AS PER COMMENTS	LS
A	03/12/21	REVISED AS PER COMMENTS	LS

JOB NO. : J-858

PROJECT :
PROPOSED RESIDENTIAL DEVELOPMENT
AT TKOTL 70RP, PHASE 11, LOHAS PARK
TSEUNG KWAN O, N.T.

TITLE :
DIE LIST
FOR CURTAIN WALL

DATE : 22-OCT-21 | SCALE : 1:2(A1)

DRAWN BY : KY | CHECKED BY : YB

美特鋁質有限公司
MIDI ALUMINIUM FABRICATOR LTD.
Units 6-8, Sunray Industrial Centre, 1/F
610 Cha Kwo Ling Road, Kowloon
Tel:23489211-4 Fax:(852)27727666

DWG NO. : J858-CW-DL04 | REV. : D

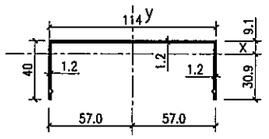

DIE SECTION	COVER (SC2)	SECTION MODULUS(cm³)	Zx	1.17
			Zy	7.99
MATERIAL	6063-T5	MOMENT OF INERTIA (cm⁴)	Ix	3.62
DIE NO.	-		Iy	45.55

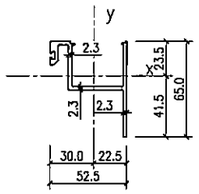

DIE SECTION	FRAME (SF1)	SECTION MODULUS(cm³)	Zx	2.63
			Zy	5.18
MATERIAL	6063-T6	MOMENT OF INERTIA (cm⁴)	Ix	10.91
DIE NO.	-		Iy	15.52

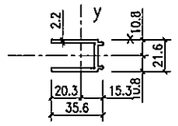

DIE SECTION	FRAME (SF2)	SECTION MODULUS(cm³)	Zx	1.41
			Zy	1.06
MATERIAL	6063-T6	MOMENT OF INERTIA (cm⁴)	Ix	1.52
DIE NO.	-		Iy	2.16

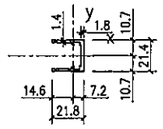

DIE SECTION	FRAME (SF3)	SECTION MODULUS(cm³)	Zx	0.72
			Zy	0.33
MATERIAL	6063-T6	MOMENT OF INERTIA (cm⁴)	Ix	0.77
DIE NO.	-		Iy	0.48

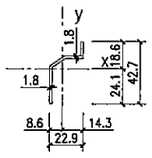

DIE SECTION	FRAME (SF4)	SECTION MODULUS(cm³)	Zx	0.563
			Zy	0.553
MATERIAL	6063-T6	MOMENT OF INERTIA (cm⁴)	Ix	1.359
DIE NO.	-		Iy	0.792

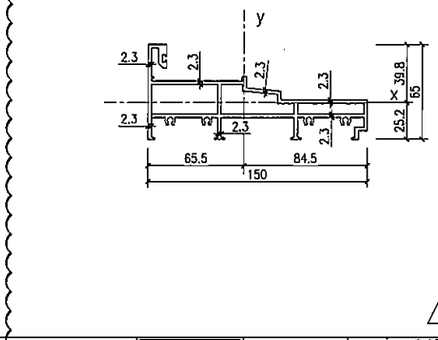

DIE SECTION	FRAME (SF5)	SECTION MODULUS(cm³)	Zx	6.97
			Zy	34.69
MATERIAL	6063-T6	MOMENT OF INERTIA (cm⁴)	Ix	27.73
DIE NO.	-		Iy	292.94

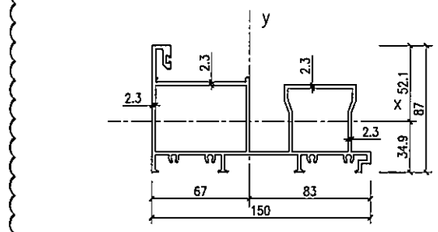

DIE SECTION	FRAME (SF6)	SECTION MODULUS(cm³)	Zx	16.1
			Zy	40.41
MATERIAL	6063-T6	MOMENT OF INERTIA (cm⁴)	Ix	83.84
DIE NO.	-		Iy	335.42

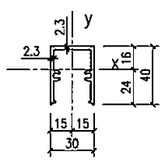

DIE SECTION	FRAME (SF7)	SECTION MODULUS(cm³)	Zx	1.72
			Zy	2.78
MATERIAL	6063-T6	MOMENT OF INERTIA (cm⁴)	Ix	4.14
DIE NO.	-		Iy	4.17

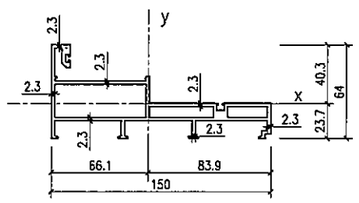

DIE SECTION	FRAME (SF8)	SECTION MODULUS(cm³)	Zx	6.67
			Zy	32.64
MATERIAL	6063-T6	MOMENT OF INERTIA (cm⁴)	Ix	26.91
DIE NO.	-		Iy	273.81

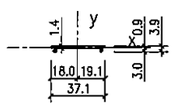

DIE SECTION	FRAME (SF9)	SECTION MODULUS(cm³)	Zx	0.012
			Zy	0.379
MATERIAL	6063-T5	MOMENT OF INERTIA (cm⁴)	Ix	0.0037
DIE NO.	-		Iy	0.7219

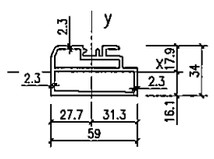

DIE SECTION	FRAME (SF5a)	SECTION MODULUS(cm³)	Zx	4.21
			Zy	6.08
MATERIAL	6063-T6	MOMENT OF INERTIA (cm⁴)	Ix	7.53
DIE NO.	-		Iy	19.02

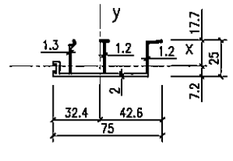

DIE SECTION	FRAME (SF11)	SECTION MODULUS(cm³)	Zx	0.98
			Zy	2.98
MATERIAL	6063-T6	MOMENT OF INERTIA (cm⁴)	Ix	1.74
DIE NO.	-		Iy	12.7

B.D. REF :

CLIENT :
信和置業有限公司
Sino Land Company Limited

ARCHITECT :
ronald lu & partners
Architects . Planners . Interior Designers
Ronald Lu & Partners (HK) Ltd.
呂元祥建築師事務所(香港)有限公司

MAIN CONTRACTOR :
Gammon

STRUCTURAL ENGINEER :
AECOM

FACADE CONSULTANT:
AECOM

NOTE :
1. ALL DIMENSIONS ARE IN mm.
2. ALL ELEVATIONS ARE VIEWED FROM OUTSIDE.
3. ALL DIMENSIONS TO BE VERIFIED ON SITE BEFORE FABRICATION.

LEGEND :
X1 — DETAIL MARK NO.
X001 — REFER SHEET NO.

1. F.F.L. --FINISHED FLOOR LEVEL
2. S.F.L. --STRUCTURAL FLOOR LEVEL
3. (R) --REVERSED DETAIL

NO.	DATE	REVISED	BY
C	24/05/22	REVISED AS PER COMMENTS	LS
B	23/12/21	REVISED AS PER COMMENTS	LS
A	03/12/21	REVISED AS PER COMMENTS	LS

JOB NO. : J-858

PROJECT :
PROPOSED RESIDENTIAL DEVELOPMENT
AT TKOTL 70RP, PHASE 11, LOHAS PARK
TSEUNG KWAN O, N.T.

TITLE :
DIE LIST
FOR CURTAIN WALL

DATE : 22-OCT-21 | SCALE : 1:2(A1)

DRAWN BY : KY | CHECKED BY : YB

美特鋁質有限公司
MIDI ALUMINIUM FABRICATOR LTD.
Units 6-8, Sunray Industrial Centre, 1/F
610 Cha Kwo Ling Road, Kowloon
Tel:23489211-4 Fax:(852)27727666

DWG NO. : J858-CW-DL05 | REV. : C

DELETED

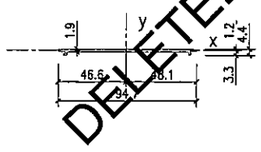

DIE SECTION	FRAME (SF12)	SECTION MODULUS (cm³)	Zx	0.021
			Zy	2.51
MATERIAL	6063-T6	MOMENT OF INERTIA (cm⁴)	Ix	0.007
DIE NO.	–		Iy	12.09

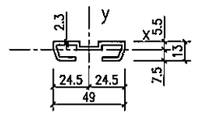

DIE SECTION	FRAME (SF13)	SECTION MODULUS (cm³)	Zx	0.58
			Zy	2.41
MATERIAL	6063-T6	MOMENT OF INERTIA (cm⁴)	Ix	0.44
DIE NO.	–		Iy	5.9

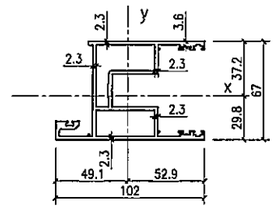

DIE SECTION	SASH (SS1)	SECTION MODULUS (cm³)	Zx	17.45
			Zy	14
MATERIAL	6063-T6	MOMENT OF INERTIA (cm⁴)	Ix	64.97
DIE NO.	–		Iy	74

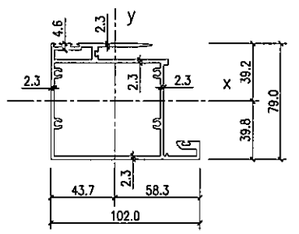

DIE SECTION	SASH (SS2)	SECTION MODULUS (cm³)	Zx	24.78
			Zy	19.95
MATERIAL	6063-T6	MOMENT OF INERTIA (cm⁴)	Ix	98.66
DIE NO.	–		Iy	116.42

DELETED

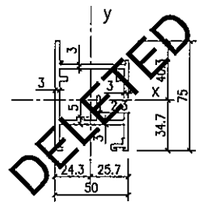

DIE SECTION	FRAME (GC1)	SECTION MODULUS (cm³)	Zx	6.47
			Zy	3.49
MATERIAL	6063-T6	MOMENT OF INERTIA (cm⁴)	Ix	25.59
DIE NO.	–		Iy	11.73

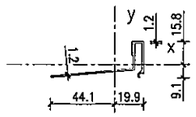

DIE SECTION	FRAME (GC3)	SECTION MODULUS (cm³)	Zx	1.95
			Zy	4.92
MATERIAL	6063-T6	MOMENT OF INERTIA (cm⁴)	Ix	6.03
DIE NO.	–		Iy	20

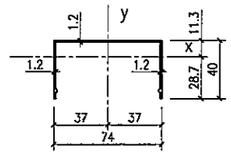

DIE SECTION	TRANSOM (T6)	SECTION MODULUS (cm³)	Zx	55.96
			Zy	69.48
MATERIAL	6063-T6	MOMENT OF INERTIA (cm⁴)	Ix	279.81
DIE NO.	–		Iy	635.64

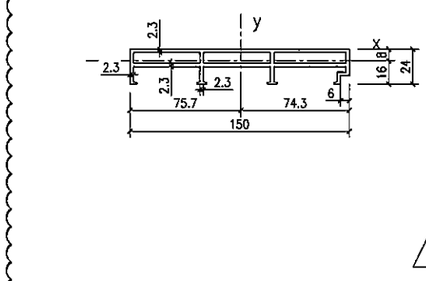

DIE SECTION	COVER (SC3)	SECTION MODULUS (cm³)	Zx	1.11
			Zy	4.55
MATERIAL	6063-T5	MOMENT OF INERTIA (cm⁴)	Ix	3.19
DIE NO.	–		Iy	16.84

DIE SECTION	COVER (SC4)	SECTION MODULUS (cm³)	Zx	2.35
			Zy	25.42
MATERIAL	6063-T6	MOMENT OF INERTIA (cm⁴)	Ix	3.77
DIE NO.	–		Iy	192.46

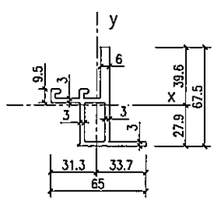

DIE SECTION	SASH (SS3)	SECTION MODULUS (cm³)	Zx	7.74
			Zy	11.41
MATERIAL	6063-T6	MOMENT OF INERTIA (cm⁴)	Ix	31.22
DIE NO.	–		Iy	29.34

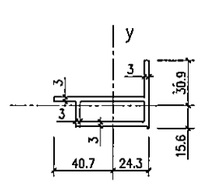

DIE SECTION	SASH (SS5)	SECTION MODULUS (cm³)	Zx	0.52
			Zy	1.2
MATERIAL	6063-T5	MOMENT OF INERTIA (cm⁴)	Ix	0.82
DIE NO.	–		Iy	5.33

DELETED

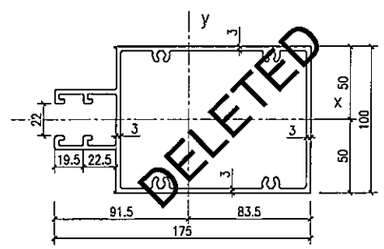

DIE SECTION	TRANSOM (T6)	SECTION MODULUS (cm³)	Zx	55.96
			Zy	69.48
MATERIAL	6063-T6	MOMENT OF INERTIA (cm⁴)	Ix	279.81
DIE NO.	–		Iy	635.64

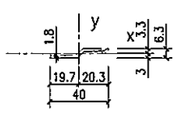

DIE SECTION	Buckling Clip(BC03)	SECTION MODULUS (cm³)	Zx	0.1
			Zy	0.42
MATERIAL	6063-T5	MOMENT OF INERTIA (cm⁴)	Ix	0.03
DIE NO.	–		Iy	0.86

B.D. REF :

CLIENT :
信和置業有限公司
Sino Land Company Limited

ARCHITECT :
ronald lu & partners
Architects · Planners · Interior Designers
Ronald Lu & Partners (HK) Ltd.
呂元祥建築師事務所(香港)有限公司

MAIN CONTRACTOR :
Gammon

STRUCTURAL ENGINEER :
AECOM

FACADE CONSULTANT:
AECOM

NOTE :
1. ALL DIMENSIONS ARE IN mm.
2. ALL ELEVATIONS ARE VIEWED FROM OUTSIDE.
3. ALL DIMENSIONS TO BE VERIFIED ON SITE BEFORE FABRICATION.

LEGEND :
X1 — DETAIL MARK NO.
X001 — REFER SHEET NO.

1. F.F.L. --FINISHED FLOOR LEVEL
2. S.F.L. --STRUCTURAL FLOOR LEVEL
3. (/R) --REVERSED DETAIL

NO.	DATE	REVISED	BY
E	24/05/22	REVISED AS PER COMMENTS	LS
D	06/04/22	REVISED AS PER COMMENTS	LS
C	15/02/22	REVISED AS PER COMMENTS	LS
B	25/01/22	REVISED AS PER COMMENTS	LS
A	23/12/21	REVISED AS PER COMMENTS	LS

JOB NO. : J-858

PROJECT :
PROPOSED RESIDENTIAL DEVELOPMENT
AT TKOTL 70RP, PHASE 11, LOHAS PARK
TSEUNG KWAN O, N.T.

TITLE :
DIE LIST
FOR CURTAIN WALL

DATE : 22-OCT-21 | SCALE : 1:2(A1)

DRAWN BY : KY | CHECKED BY : YB

美特鋁質有限公司
MIDI ALUMINIUM FABRICATOR LTD.
Units 6-8, Sunray Industrial Centre, 1/F
610 Cha Kwo Ling Road, Kowloon
Tel:23489211-4 Fax:(852)27727666

DWG NO. : J858-CW-DL06 | REV. : E

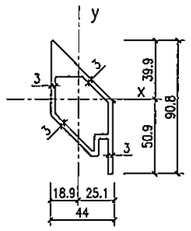

DIE SECTION	ATTACHMENT (A9)	SECTION MODULUS(cm³)	Zx	9.51
			Zy	7.25
MATERIAL	6063-T5	MOMENT OF INERTIA (cm⁴)	Ix	48.37
DIE NO.	-		Iy	18.16

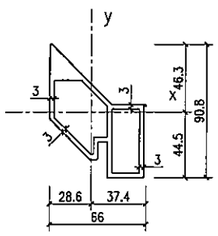

DIE SECTION	ATTACHMENT (A10)	SECTION MODULUS(cm³)	Zx	15.38
			Zy	13.42
MATERIAL	6063-T5	MOMENT OF INERTIA (cm⁴)	Ix	71.21
DIE NO.	-		Iy	40.08

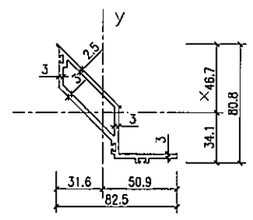

DIE SECTION	SASH(S3)	SECTION MODULUS(cm³)	Zx	7.26
			Zy	5.44
MATERIAL	6063-T5	MOMENT OF INERTIA (cm⁴)	Ix	33.89
DIE NO.	-		Iy	27.69

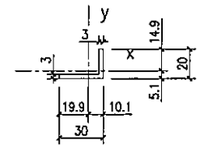

DIE SECTION	BRACKET(B11)	SECTION MODULUS(cm³)	Zx	0.31
			Zy	0.64
MATERIAL	6063-T6	MOMENT OF INERTIA (cm⁴)	Ix	0.45
DIE NO.	-		Iy	1.27

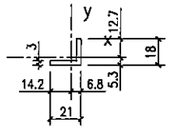

DIE SECTION	BRACKET (B12)	SECTION MODULUS(cm³)	Zx	0.236
			Zy	0.314
MATERIAL	6063-T6	MOMENT OF INERTIA (cm⁴)	Ix	0.302
DIE NO.	-		Iy	0.447

DELETED

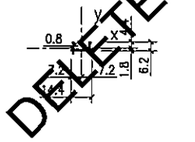

DIE SECTION	COVER (SC5)	SECTION MODULUS(cm³)	Zx	0.02
			Zy	0.07
MATERIAL	6063-T5	MOMENT OF INERTIA (cm⁴)	Ix	0.007
DIE NO.	-		Iy	0.048

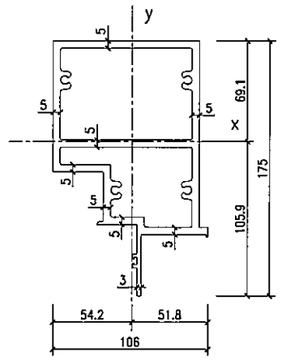

DIE SECTION	MULLION (M7)	SECTION MODULUS(cm³)	Zx	61.15
			Zy	70.34
MATERIAL	6063-T6	MOMENT OF INERTIA (cm⁴)	Ix	647.80
DIE NO.	-		Iy	381.15

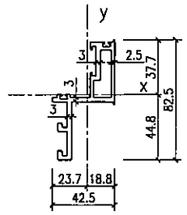

DIE SECTION	SASH(S4)	SECTION MODULUS(cm³)	Zx	6.65
			Zy	4.09
MATERIAL	6063-T6	MOMENT OF INERTIA (cm⁴)	Ix	29.77
DIE NO.	-		Iy	9.68

DELETED

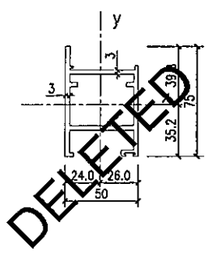

DIE SECTION	SASH (SS4)	SECTION MODULUS(cm³)	Zx	7.7
			Zy	11.13
MATERIAL	6063-T6	MOMENT OF INERTIA (cm⁴)	Ix	30.62
DIE NO.	-		Iy	29.01

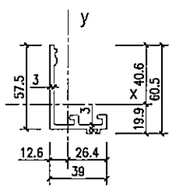

DIE SECTION	GLAZING(GA3)	SECTION MODULUS(cm³)	Zx	3.08
			Zy	2.45
MATERIAL	6063-T5	MOMENT OF INERTIA (cm⁴)	Ix	12.48
DIE NO.	-		Iy	6.49

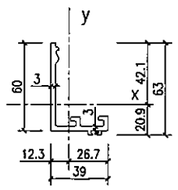

DIE SECTION	GLAZING(GA4)	SECTION MODULUS(cm³)	Zx	3.33
			Zy	2.47
MATERIAL	6063-T5	MOMENT OF INERTIA (cm⁴)	Ix	14.02
DIE NO.	-		Iy	6.58

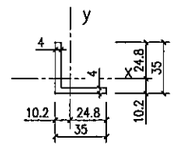

DIE SECTION	BRACKET(B14)	SECTION MODULUS(cm³)	Zx	1.22
			Zy	1.22
MATERIAL	6063-T6	MOMENT OF INERTIA (cm⁴)	Ix	3.026
DIE NO.	-		Iy	3.026

B.D. REF :

CLIENT :
信和置業有限公司
Sino Land Company Limited

ARCHITECT :
ronald lu & partners
Architects . Planners . Interior Designers
Ronald Lu & Partners (HK) Ltd.
呂元祥建築師事務所(香港)有限公司

MAIN CONTRACTOR :
Gammon

STRUCTURAL ENGINEER :
AECOM

FACADE CONSULTANT:
AECOM

NOTE :
1. ALL DIMENSIONS ARE IN mm.
2. ALL ELEVATIONS ARE VIEWED FROM OUTSIDE.
3. ALL DIMENSIONS TO BE VERIFIED ON SITE BEFORE FABRICATION.

LEGEND :
- X1 / XD01 — DETAIL MARK NO. / REFER SHEET NO.
1. F.F.L. --FINISHED FLOOR LEVEL
2. S.F.L. --STRUCTURAL FLOOR LEVEL
3. /B --REVERSED DETAIL

NO.	DATE	REVISED	BY
B	24/05/22	REVISED AS PER COMMENTS	LS
A	06/04/22	REVISED AS PER COMMENTS	LS

JOB NO. : J-858

PROJECT :
PROPOSED RESIDENTIAL DEVELOPMENT
AT TKOTL 70RP, PHASE 11, LOHAS PARK
TSEUNG KWAN O, N.T.

TITLE :
DIE LIST
FOR CURTAIN WALL

DATE : 22-OCT-21 | SCALE : 1:2(A1)

DRAWN BY : KY | CHECKED BY : YB

美特鋁質有限公司
MIDI ALUMINUM FABRICATOR LTD.
Units 6-8, Sunray Industrial Centre, 1/F
610 Cha Kwo Ling Road, Kowloon
Tel:23489211-4 Fax:(852)27727666

DWG NO. : J858-CW-DL07 | REV. : B

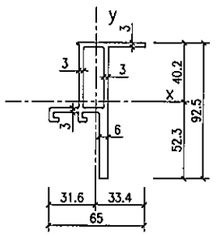

DIE SECTION	FRAME (GC2)	SECTION MODULUS(cm³)	Zx	11.57
			Zy	3.77
MATERIAL	6063-T6	MOMENT OF INERTIA (cm⁴)	Ix	60.5
DIE NO.	–		Iy	12.61

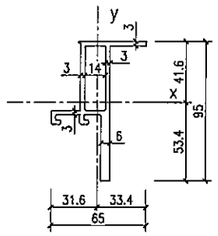

DIE SECTION	FRAME (GC4)	SECTION MODULUS(cm³)	Zx	12.24
			Zy	3.81
MATERIAL	6063-T6	MOMENT OF INERTIA (cm⁴)	Ix	65.35
DIE NO.	–		Iy	12.72

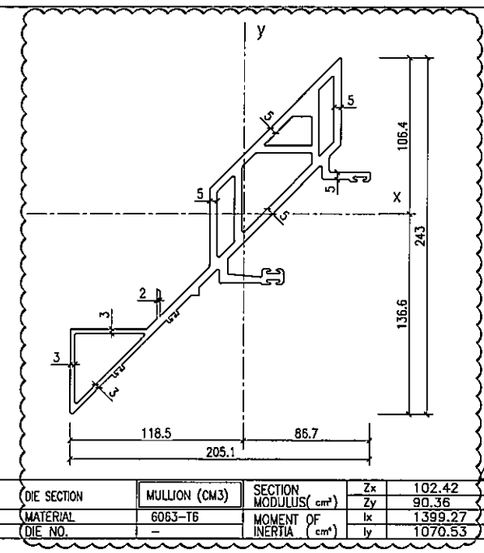

DIE SECTION	MULLION (CM3)	SECTION MODULUS(cm³)	Zx	102.42
			Zy	90.36
MATERIAL	6063-T6	MOMENT OF INERTIA (cm⁴)	Ix	1399.27
DIE NO.	–		Iy	1070.53

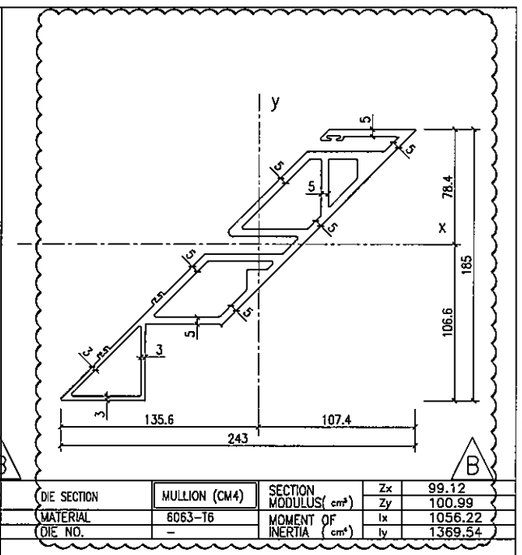

DIE SECTION	MULLION (CM4)	SECTION MODULUS(cm³)	Zx	99.12
			Zy	100.99
MATERIAL	6063-T6	MOMENT OF INERTIA (cm⁴)	Ix	1056.22
DIE NO.	–		Iy	1369.54

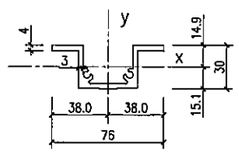

DIE SECTION	STIFFENER (SS6)	SECTION MODULUS(cm³)	Zx	3.978
			Zy	5.51
MATERIAL	6063-T5	MOMENT OF INERTIA (cm⁴)	Ix	5.996
DIE NO.	–		Iy	20.902

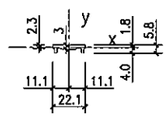

DIE SECTION	COVER (SC6)	SECTION MODULUS(cm³)	Zx	0.028
			Zy	0.28
MATERIAL	6063-T6	MOMENT OF INERTIA (cm⁴)	Ix	0.011
DIE NO.	–		Iy	0.31

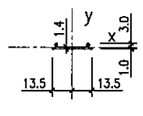

DIE SECTION	COVER (SC7)	SECTION MODULUS(cm³)	Zx	0.0096
			Zy	0.1953
MATERIAL	6063-T5	MOMENT OF INERTIA (cm⁴)	Ix	0.0028
DIE NO.	–		Iy	0.2636

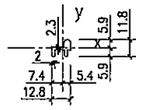

DIE SECTION	COVER (SC8)	SECTION MODULUS(cm³)	Zx	0.086
			Zy	0.141
MATERIAL	6063-T6	MOMENT OF INERTIA (cm⁴)	Ix	0.051
DIE NO.	–		Iy	0.105

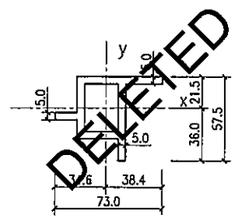

DIE SECTION	FRAME (GC5)	SECTION MODULUS(cm³)	Zx	7.104
			Zy	6.674
MATERIAL	6063-T5	MOMENT OF INERTIA (cm⁴)	Ix	25.566
DIE NO.	–		Iy	25.633

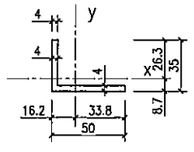

DIE SECTION	BRACKET (B13)	SECTION MODULUS(cm³)	Zx	1.28
			Zy	2.43
MATERIAL	6063-T5	MOMENT OF INERTIA (cm⁴)	Ix	3.36
DIE NO.	–		Iy	8.23

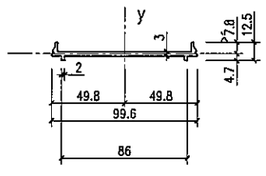

DIE SECTION	ATTACHMENT (SA3)	SECTION MODULUS(cm³)	Zx	0.11
			Zy	6.4
MATERIAL	6063-T5	MOMENT OF INERTIA (cm⁴)	Ix	0.09
DIE NO.	–		Iy	31.85

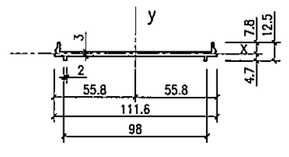

DIE SECTION	ATTACHMENT (SA4)	SECTION MODULUS(cm³)	Zx	0.11
			Zy	7.87
MATERIAL	6063-T5	MOMENT OF INERTIA (cm⁴)	Ix	0.089
DIE NO.	–		Iy	43.93

B.D. REF :

CLIENT :
信和置業有限公司
Sino Land Company Limited

ARCHITECT :
ronald lu & partners
Architects Planners Interior Designers
Ronald Lu & Partners (HK) Ltd.
呂元祥建築師事務所(香港)有限公司

MAIN CONTRACTOR :
Gammon

STRUCTURAL ENGINEER :
AECOM

FACADE CONSULTANT:
AECOM

NOTE :
1. ALL DIMENSIONS ARE IN mm.
2. ALL ELEVATIONS ARE VIEWED FROM OUTSIDE.
3. ALL DIMENSIONS TO BE VERIFIED ON SITE BEFORE FABRICATION.

LEGEND :
X1 — DETAIL MARK NO.
X001 — REFER SHEET NO.

1. F.F.L. --FINISHED FLOOR LEVEL
2. S.F.L. --STRUCTURAL FLOOR LEVEL
3. /B --REVERSED DETAIL

NO.	DATE	REVISED	BY
B	24/05/22	REVISED AS PER COMMENTS	LS
A	06/04/22	REVISED AS PER COMMENTS	LS

JOB NO. : J-858

PROJECT :
PROPOSED RESIDENTIAL DEVELOPMENT
AT TKOTL 70RP, PHASE 11, LOHAS PARK
TSEUNG KWAN O, N.T.

TITLE :
DIE LIST
FOR CURTAIN WALL

DATE : 22-OCT-21 | SCALE : 1:2(A1)

DRAWN BY : KY | CHECKED BY : YB

美特鋁質有限公司
MIDI ALUMINIUM FABRICATOR LTD.
Units 6-8, Sunray Industrial Centre, 1/F
610 Cha Kwo Ling Road, Kowloon
Tel:23489211-4 Fax:(852)27727666

DWG NO. : J858-CW-DL08 | REV. : B

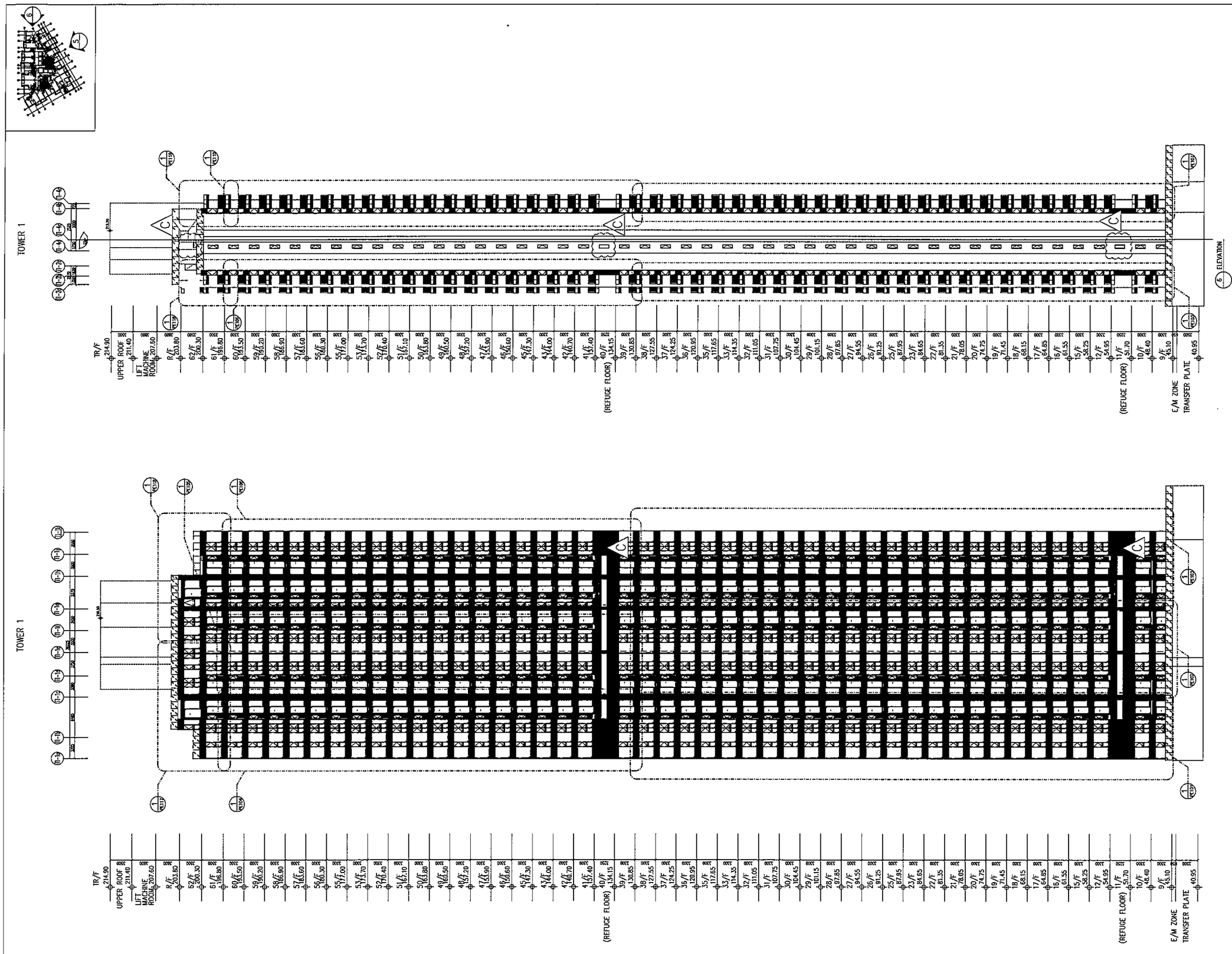

B.D. REF : –

CLIENT :
信和置業有限公司
Sino Land Company Limited

ARCHITECT :
ronald lu & partners
Architects . Partners . Interior Designers
Ronald Lu & Partners (HK) Ltd.
呂元祥建築師事務所(香港)有限公司

MAIN CONTRACTOR :
Gammon

STRUCTURAL ENGINEER :
AECOM

FACADE CONSULTANT:
AECOM

NOTE :
1. ALL DIMENSIONS ARE IN mm.
2. ALL ELEVATIONS ARE VIEWED FROM OUTSIDE.
3. ALL DIMENSIONS TO BE VERIFIED ON SITE BEFORE FABRICATION.

LEGEND :
X1 — DETAIL MARK NO.
X001 — REFER SHEET NO.

1. F.F.L. --FINISHED FLOOR LEVEL
2. S.F.L. --STRUCTURAL FLOOR LEVEL
3. /R --REVERSED DETAIL

NO.	DATE	REVISED	BY
C	30/05/22	REVISED AS PER COMMENTS	LS
B	18/04/22	REVISED AS PER COMMENTS	LS
A	15/02/22	REVISED AS PER COMMENTS	LS

JOB NO. : J-658

PROJECT :
PROPOSED RESIDENTIAL DEVELOPMENT
AT TKOTL 70RP, PHASE 11, LOHAS PARK
TSEUNG KWAN O, N.T.

TITLE :
–
ELEVATION & SECTION
FOR CURTAIN WALL (TOWER 1)

DATE : 20-OCT-21 | SCALE : 1:280(A1)

DRAWN BY : – | CHECKED BY : –

美特鋁製有限公司
MIDI ALUMINIUM FABRICATOR LTD.
Units 6-8, Sunray Industrial Centre, 1/F
610 Cha Kwo Ling Road, Kowloon
Tel:23489211-4 Fax:(852)27727866

DWG NO. : J858-CW-FE101 | REV. : C

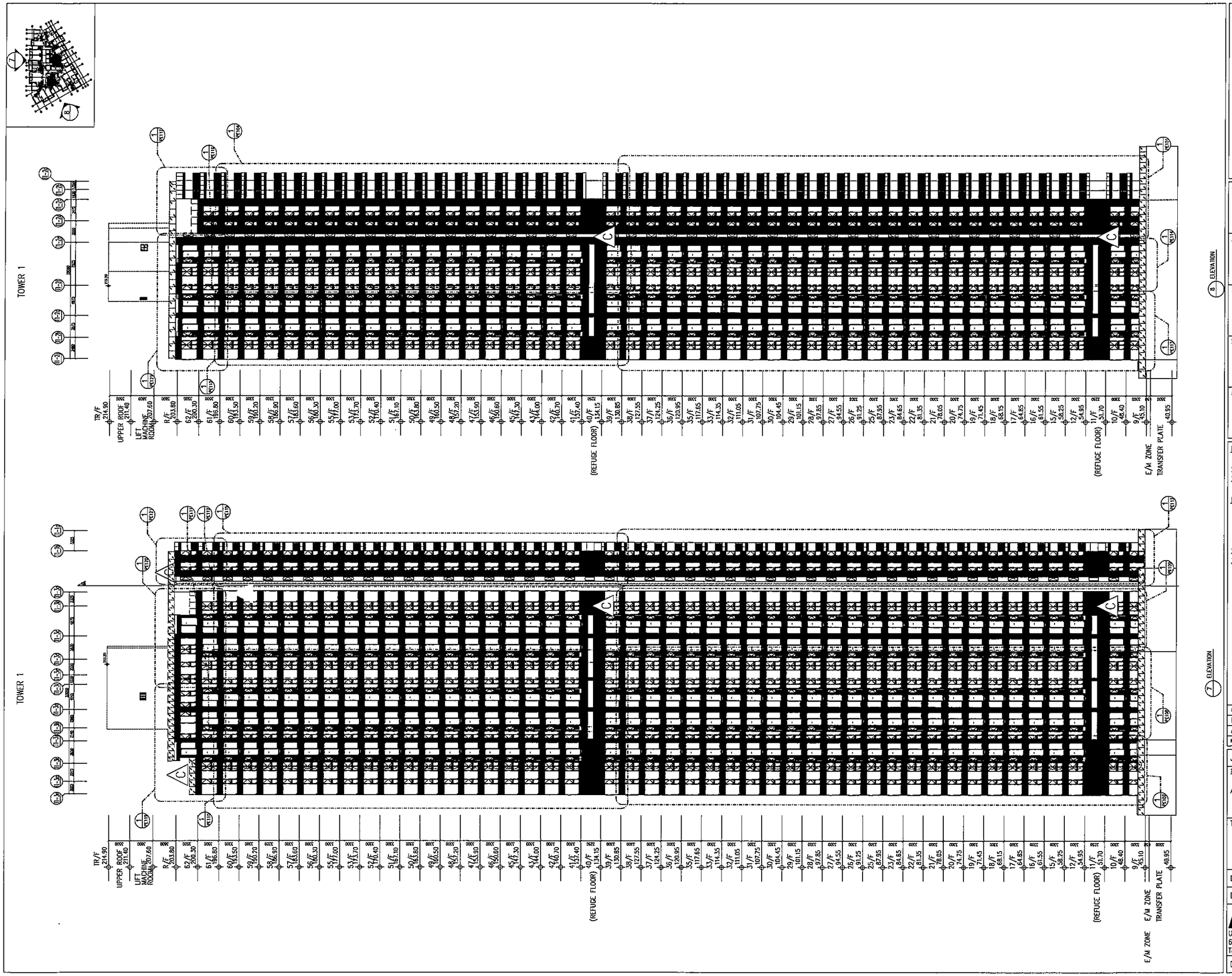

B.D. REF : –

CLIENT :
信和置業有限公司
Sino Land Company Limited

ARCHITECT :
ronald lu & partners
Architects . Planners . Interior Designers
Ronald Lu & Partners (HK) Ltd.
呂元祥建築師事務所(香港)有限公司

MAIN CONTRACTOR :
Gammon

STRUCTURAL ENGINEER :
AECOM

FACADE CONSULTANT:
AECOM

NOTE :
1. ALL DIMENSIONS ARE IN mm.
2. ALL ELEVATIONS ARE VIEWED FROM OUTSIDE.
3. ALL DIMENSIONS TO BE VERIFIED ON SITE BEFORE FABRICATION.

LEGEND :
X1 — DETAIL MARK NO.
X001 — REFER SHEET NO.
1. F.F.L. -- FINISHED FLOOR LEVEL
2. S.F.L. -- STRUCTURAL FLOOR LEVEL
3. /R -- REVERSED DETAIL

NO.	DATE	REVISED	BY
C	30/05/22	REVISED AS PER COMMENTS	LS
B	18/04/22	REVISED AS PER COMMENTS	LS
A	15/02/22	REVISED AS PER COMMENTS	LS

JOB NO. : J-858

PROJECT :
PROPOSED RESIDENTIAL DEVELOPMENT AT TKOTL 70RP, PHASE 11, LOHAS PARK TSEUNG KWAN O, N.T.

TITLE :
–
ELEVATION & SECTION FOR CURTAIN WALL (TOWER 1)

DATE : 20-OCT-21	SCALE : 1:280(A1)
DRAWN BY : –	CHECKED BY : –

美特鋁製有限公司
MIDI ALUMINIUM FABRICATOR LTD.
Units 6-8, Sunray Industrial Centre, 1/F
610 Cha Kwo Ling Road, Kowloon
Tel:23489211-4 Fax:(852)27727666

DWG NO. : J858-CW-FE102 REV. : C

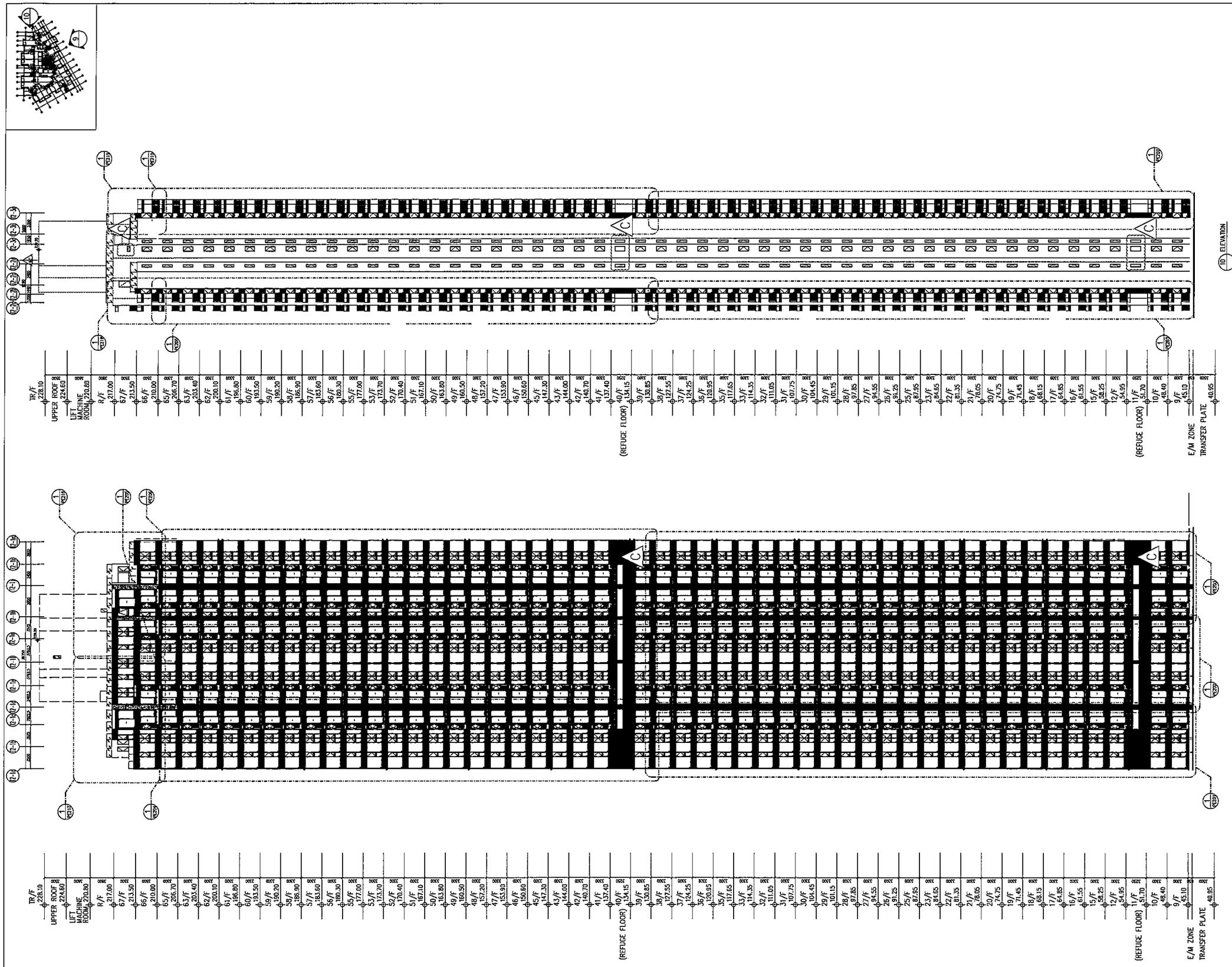

B.D. REF : –

CLIENT :
信和置業有限公司
Sino Land Company Limited

ARCHITECT :
ronald lu & partners
Architects . Planners . Interior Designers
Ronald Lu & Partners (HK) Ltd.
呂元祥建築師事務所(香港)有限公司

MAIN CONTRACTOR :
Gammon

STRUCTURAL ENGINEER :
AECOM

FACADE CONSULTANT:
AECOM

NOTE :
1. ALL DIMENSIONS ARE IN mm.
2. ALL ELEVATIONS ARE VIEWED FROM OUTSIDE.
3. ALL DIMENSIONS TO BE VERIFIED ON SITE BEFORE FABRICATION.

LEGEND :
X1 — DETAIL MARK NO.
X001 — REFER SHEET NO.

1. F.F.L. -- FINISHED FLOOR LEVEL
2. S.F.L. -- STRUCTURAL FLOOR LEVEL
3. /R -- REVERSED DETAIL

NO.	DATE	REVISED	BY
C	30/05/22	REVISED AS PER COMMENTS	LS
B	18/04/22	REVISED AS PER COMMENTS	LS
A	15/02/22	REVISED AS PER COMMENTS	LS

JOB NO. : J-858

PROJECT :
PROPOSED RESIDENTIAL DEVELOPMENT AT TKOTL 70RP, PHASE 11, LOHAS PARK TSEUNG KWAN O, N.T.

TITLE :
–
ELEVATION & SECTION FOR CURTAIN WALL (TOWER 2)

DATE : 20-OCT-21 | SCALE : 1:280(A1)

DRAWN BY : – | CHECKED BY : –

美特鋁製有限公司
MIDI ALUMINIUM FABRICATOR LTD.
Units 6-8, Sunray Industrial Centre, 1/F
610 Cha Kwo Ling Road, Kowloon
Tel:23489211-4 Fax:(852)27727666

DWG NO. : J858-CW-FE201 | REV. : C

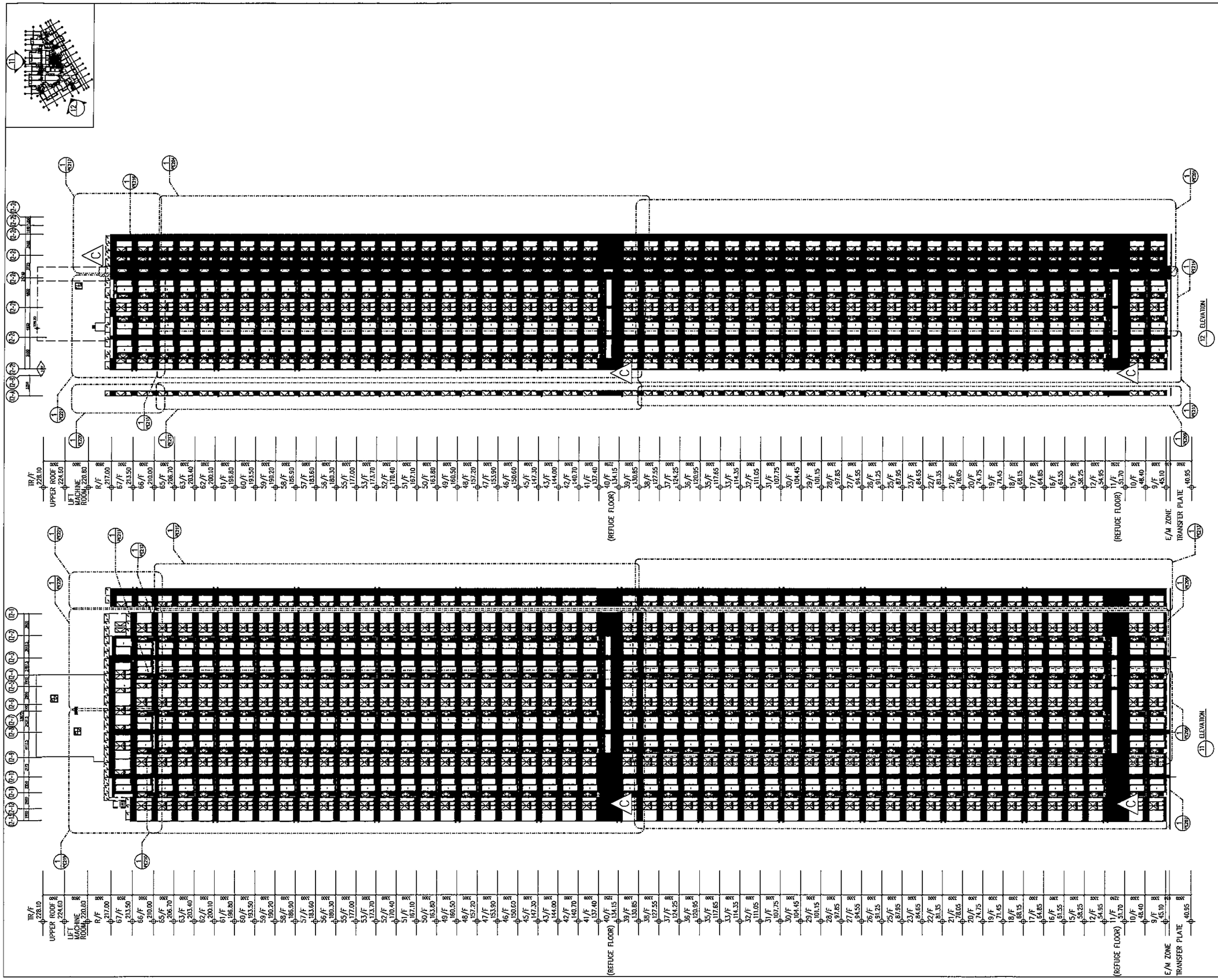

B.D. REF : –

CLIENT :
信和置業有限公司
Sino Land Company Limited

ARCHITECT :
ronald lu & partners
Architects . Planners . Interior Designers
Ronald Lu & Partners (HK) Ltd.
呂元祥建築師事務所(香港)有限公司

MAIN CONTRACTOR :
Gammon

STRUCTURAL ENGINEER :
AECOM

FACADE CONSULTANT:
AECOM

NOTE :
1. ALL DIMENSIONS ARE IN mm.
2. ALL ELEVATIONS ARE VIEWED FROM OUTSIDE.
3. ALL DIMENSIONS TO BE VERIFIED ON SITE BEFORE FABRICATION.

LEGEND :
X1 — DETAIL MARK NO.
X001 — REFER SHEET NO.
1. F.F.L. --FINISHED FLOOR LEVEL
2. S.F.L. --STRUCTURAL FLOOR LEVEL
3. /R --REVERSED DETAIL

NO.	DATE	REVISED	BY
C	30/05/22	REVISED AS PER COMMENTS	LS
B	18/04/22	REVISED AS PER COMMENTS	LS
A	15/02/22	REVISED AS PER COMMENTS	LS

JOB NO. : J-858

PROJECT :
PROPOSED RESIDENTIAL DEVELOPMENT AT TKOTL 70RP, PHASE 11, LOHAS PARK TSEUNG KWAN O, N.T.

TITLE :
–
ELEVATION & SECTION FOR CURTAIN WALL (TOWER 2)

DATE : 20-OCT-21 | SCALE : 1:280(A1)

DRAWN BY : – | CHECKED BY : –

美特鋁質有限公司
MIDI ALUMINIUM FABRICATOR LTD.
Units 6-8, Sunray Industrial Centre, 1/F
610 Cha Kwo Ling Road, Kowloon
Tel:23489211-4 Fax:(852)27727666

DWG NO. : J858-CW-FE202 | REV. : C

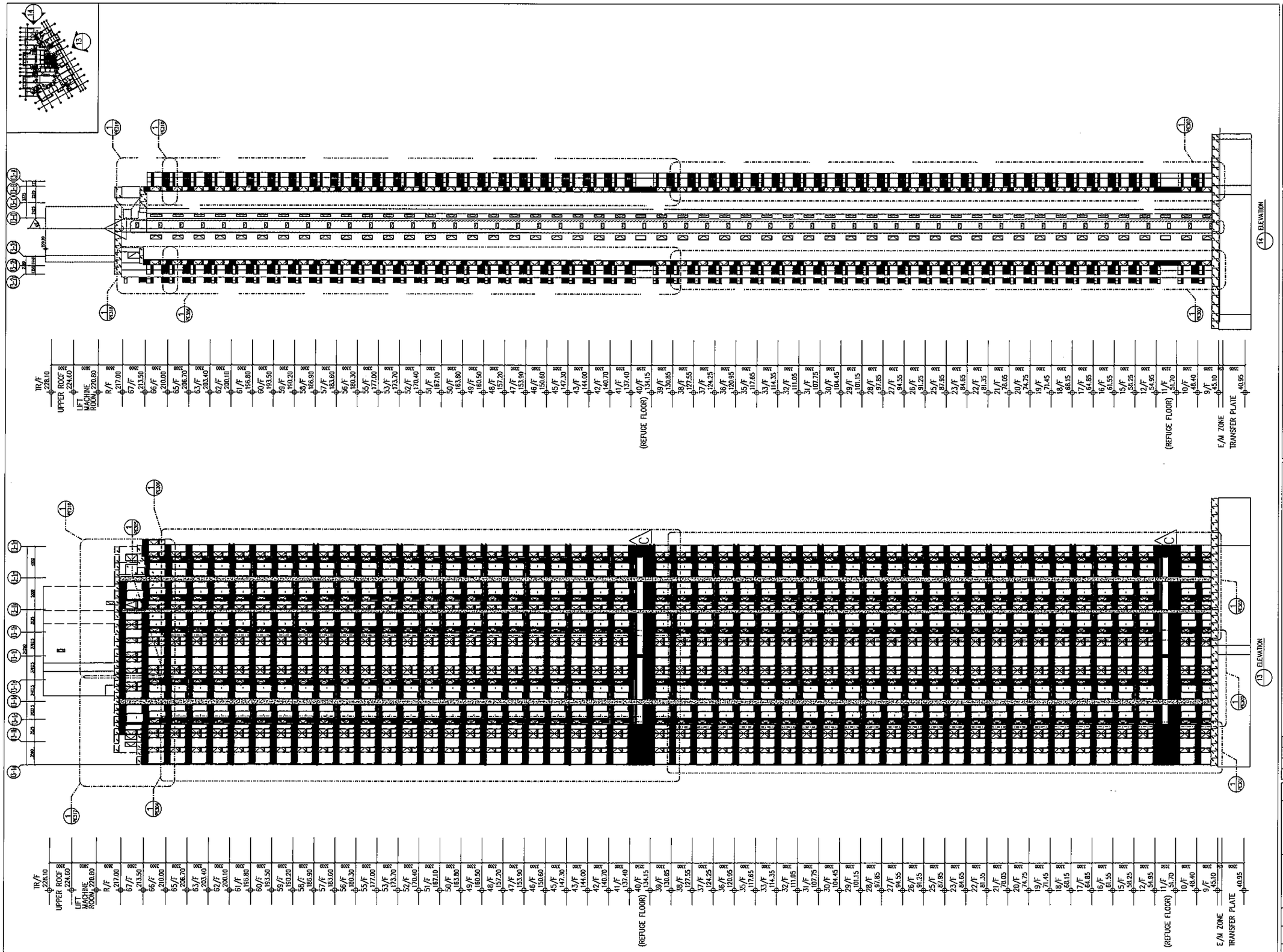

B.D. REF : –

CLIENT :
信和置業有限公司
Sino Land Company Limited

ARCHITECT :
ronald lu & partners
Architects . Planners . Interior Designers
Ronald Lu & Partners (HK) Ltd.
呂元祥建築師事務所(香港)有限公司

MAIN CONTRACTOR :
Gammon

STRUCTURAL ENGINEER :
AECOM

FACADE CONSULTANT:
AECOM

NOTE :
1. ALL DIMENSIONS ARE IN mm.
2. ALL ELEVATIONS ARE VIEWED FROM OUTSIDE.
3. ALL DIMENSIONS TO BE VERIFIED ON SITE BEFORE FABRICATION.

LEGEND :
- X1 / X001 — DETAIL MARK NO. / REFER SHEET NO.
1. F.F.L. --FINISHED FLOOR LEVEL
2. S.F.L. --STRUCTURAL FLOOR LEVEL
3. /R --REVERSED DETAIL

NO.	DATE	REVISED	BY
C	30/05/22	REVISED AS PER COMMENTS	LS
B	18/04/22	REVISED AS PER COMMENTS	LS
A	15/02/22	REVISED AS PER COMMENTS	LS

JOB NO. : J-858

PROJECT :
PROPOSED RESIDENTIAL DEVELOPMENT AT TKOTL 70RP, PHASE 11, LOHAS PARK TSEUNG KWAN O, N.T.

TITLE :
ELEVATION & SECTION FOR CURTAIN WALL (TOWER 3)

DATE : 20-OCT-21 | SCALE : 1:280(A1)

DRAWN BY : – | CHECKED BY : –

美特鋁質有限公司
MIDI ALUMINIUM FABRICATOR LTD.
Units 6-8, Sunray Industrial Centre, 1/F
610 Cha Kwo Ling Road, Kowloon
Tel:23489211-4 Fax:(852)27727666

DWG NO. : J858-CW-FE301 | REV. : C

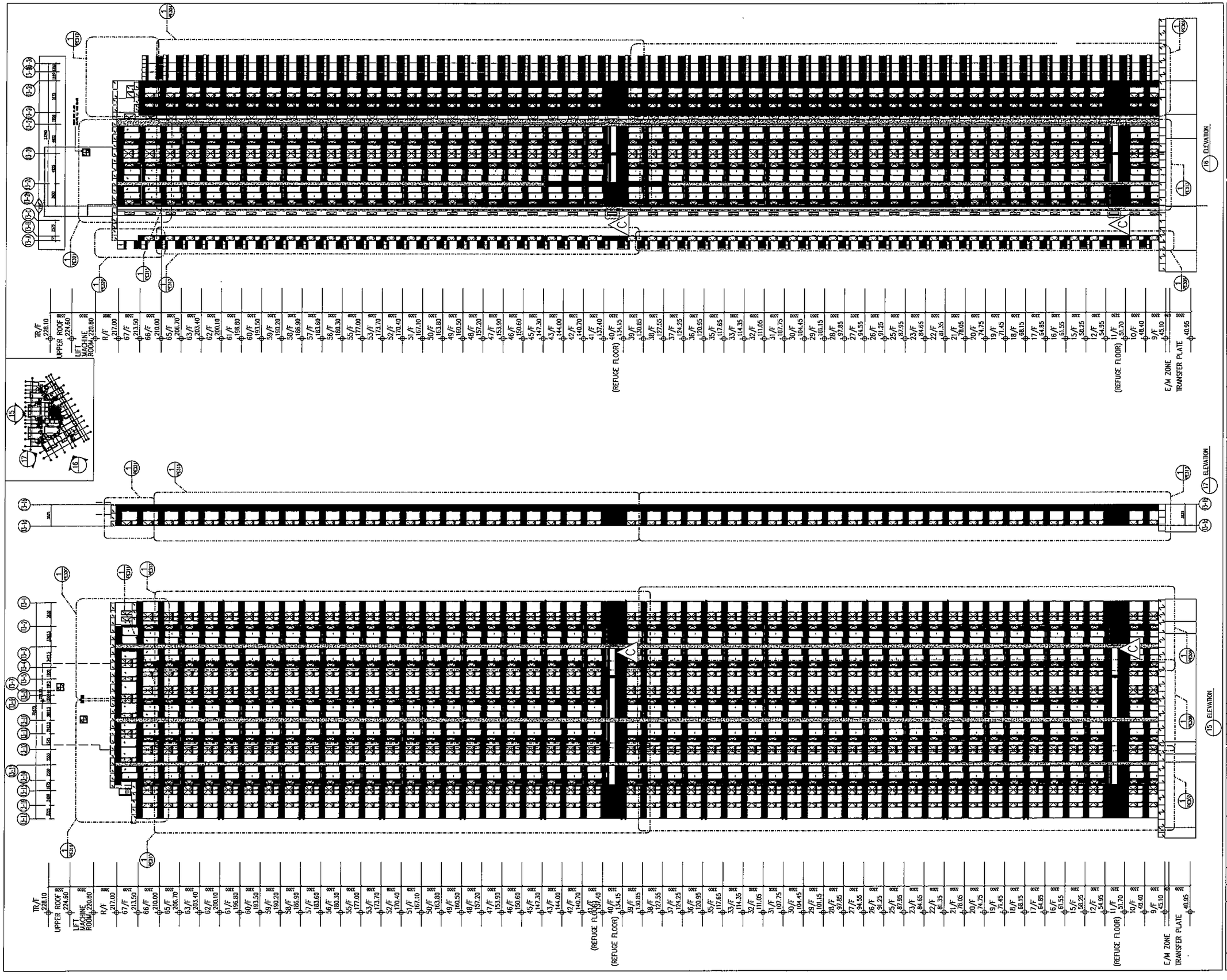

NOTE :
1. ALL DIMENSIONS ARE IN mm.
2. ALL ELEVATIONS ARE VIEWED FROM OUTSIDE.
3. ALL DIMENSIONS TO BE VERIFIED ON SITE BEFORE FABRICATION.

LEGEND :

X1 — DETAIL MARK NO.
X001 — REFER SHEET NO.

1. F.F.L. --FINISHED FLOOR LEVEL
2. S.F.L. --STRUCTURAL FLOOR LEVEL
3. (R) --REVERSED DETAIL

NO.	DATE	REVISED	BY
C	30/05/22	REVISED AS PER COMMENTS	LS
B	18/04/22	REVISED AS PER COMMENTS	LS
A	15/02/22	REVISED AS PER COMMENTS	LS

B.D. REF : –

CLIENT :
信和置業有限公司
Sino Land Company Limited

ARCHITECT :
ronald lu & partners
Architects . Planners . Interior Designers
Ronald Lu & Partners (HK) Ltd.
呂元祥建築師事務所(香港)有限公司

MAIN CONTRACTOR :
Gammon

STRUCTURAL ENGINEER :
AECOM

FACADE CONSULTANT:
AECOM

JOB NO. : J-858

PROJECT :
PROPOSED RESIDENTIAL DEVELOPMENT
AT TKOTL 70RP, PHASE 11, LOHAS PARK
TSEUNG KWAN O, N.T.

TITLE :
ELEVATION & SECTION
FOR CURTAIN WALL (TOWER 3)

DATE : 20-OCT-21 | SCALE : 1:280(A1)

DRAWN BY : – | CHECKED BY : –

美特鋁製有限公司
MIDI ALUMINIUM FABRICATOR LTD.
Units 6-8, Sunray Industrial Centre, 1/F
610 Cha Kwo Ling Road, Kowloon
Tel:23489211-4 Fax:(852)27727666

DWG NO. : J858-CW-FE302 | REV. : C

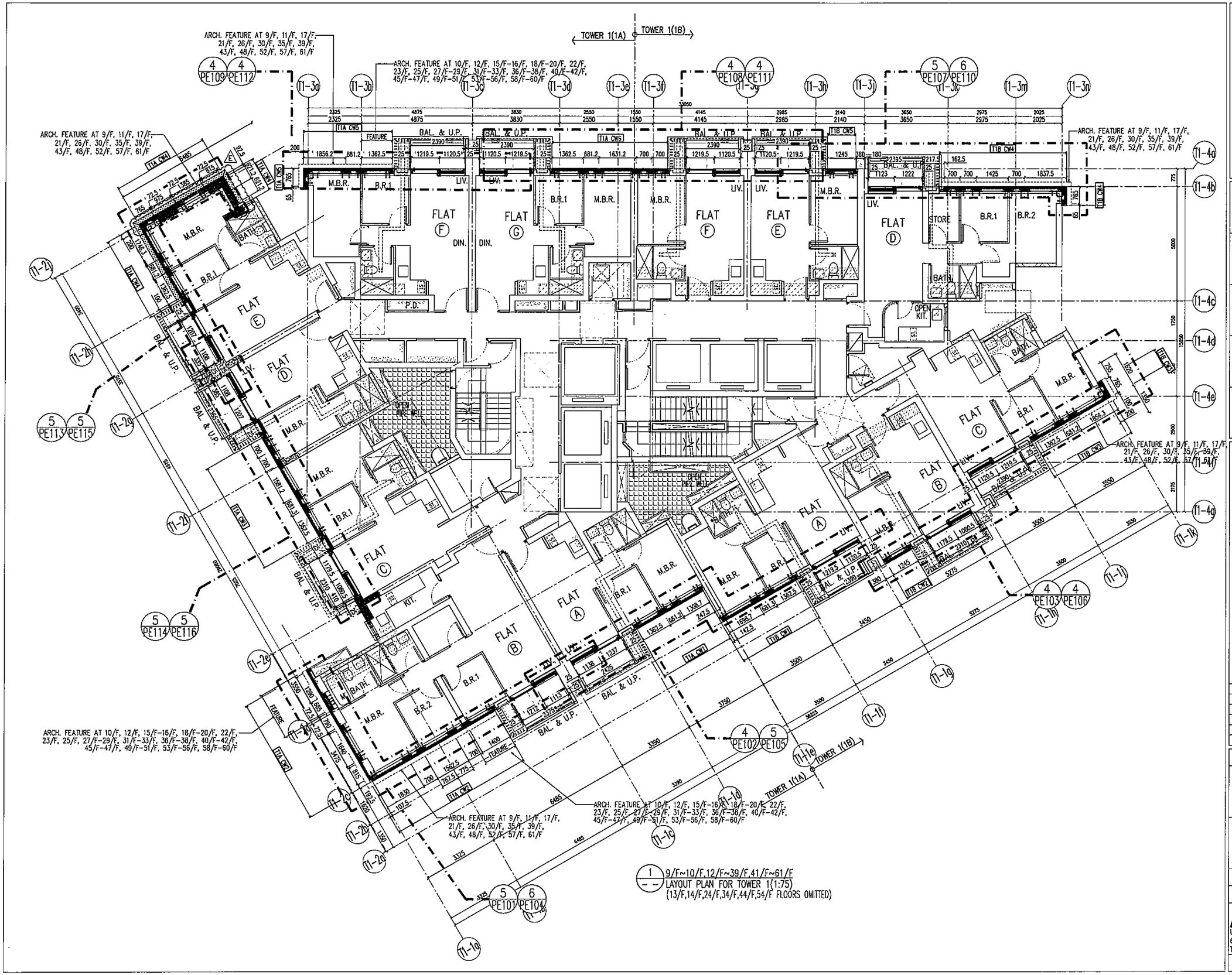

B.D. REF :

CLIENT :
信和置業有限公司
Sino Land Company Limited

ARCHITECT :
ronald lu & partners
Architects . Planners . Interior Designers
Ronald Lu & Partners (HK) Ltd.
呂元祥建築師事務所(香港)有限公司

MAIN CONTRACTOR :
Gammon

STRUCTURAL ENGINEER :
AECOM

FACADE CONSULTANT:
AECOM

NOTE :
1. ALL DIMENSIONS ARE IN mm.
2. ALL ELEVATIONS ARE VIEWED FROM OUTSIDE.
3. ALL DIMENSIONS TO BE VERIFIED ON SITE BEFORE FABRICATION.

LEGEND :
X1 — DETAIL MARK NO.
X001 — REFER SHEET NO.
1. F.F.L. --FINISHED FLOOR LEVEL
2. S.F.L. --STRUCTURAL FLOOR LEVEL
3. (R) --REVERSED DETAIL

NO.	DATE	REVISED	BY
E	30/05/22	REVISED AS PER COMMENTS	LS
D	05/04/22	REVISED AS PER COMMENTS	LS
C	23/02/22	REVISED AS PER COMMENTS	LS
B	20/12/21	REVISED AS PER COMMENTS	LS
A	03/12/21	REVISED AS PER COMMENTS	LS

JOB NO. : J-858

PROJECT :
PROPOSED RESIDENTIAL DEVELOPMENT
AT TKOTL 70RP, PHASE 11, LOHAS PARK
TSEUNG KWAN O, N.T.

TITLE :
TYPICAL FLOOR PLAN
AT TOWER 1

DATE : 22-OCT-21 | SCALE : 1:75(A1)
DRAWN BY : KY | CHECKED BY : YB

美特鋁質有限公司
MIDI ALUMINUM FABRICATOR LTD.
Units 6-8, Sunray Industrial Centre, 1/F
610 Cha Kwo Ling Road, Kowloon
Tel:23489211-4 Fax:(852)27727666

DWG NO. : J858-CW-LP101 | REV. : E

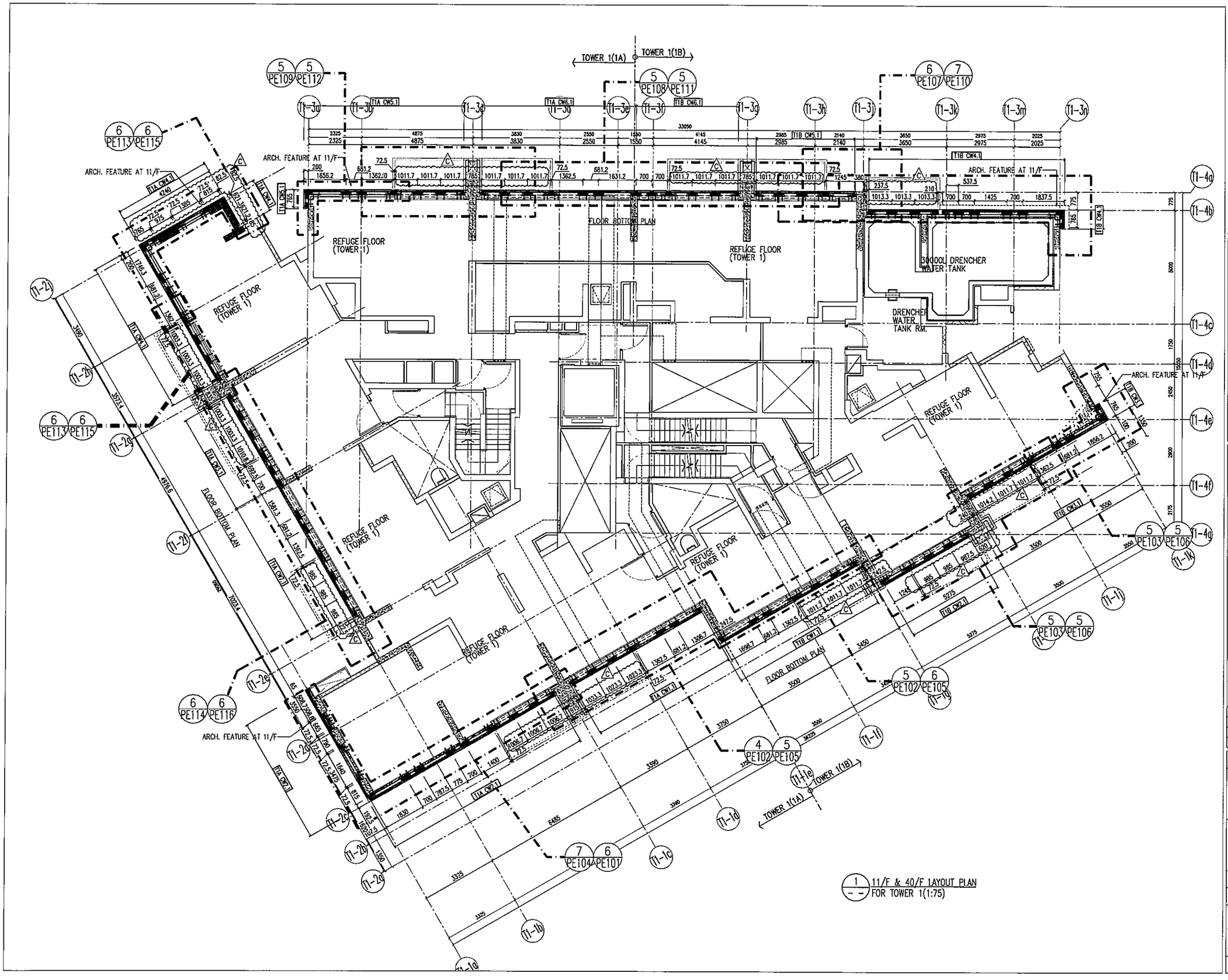

1 / - - 11/F & 40/F LAYOUT PLAN FOR TOWER 1(1:75)

B.D. REF :

CLIENT :
信和置業有限公司
Sino Land Company Limited

ARCHITECT :
ronald lu & partners
Architects · Planners · Interior Designers
Ronald Lu & Partners (HK) Ltd.
呂元祥建築師事務所(香港)有限公司

MAIN CONTRACTOR :
Gammon

STRUCTURAL ENGINEER :
AECOM

FACADE CONSULTANT:
AECOM

NOTE :
1. ALL DIMENSIONS ARE IN mm.
2. ALL ELEVATIONS ARE VIEWED FROM OUTSIDE.
3. ALL DIMENSIONS TO BE VERIFIED ON SITE BEFORE FABRICATION.

LEGEND :
X1 — DETAIL MARK NO.
XQQ1 — REFER SHEET NO.
1. F.F.L. --FINISHED FLOOR LEVEL
2. S.F.L. --STRUCTURAL FLOOR LEVEL
3. /R --REVERSED DETAIL

NO.	DATE	REVISED	BY
C	30/05/22	REVISED AS PER COMMENTS	LS
B	06/04/22	REVISED AS PER COMMENTS	LS
A	23/02/22	REVISED AS PER COMMENTS	LS

JOB NO. : J-858

PROJECT :
PROPOSED RESIDENTIAL DEVELOPMENT
AT TKOTL 70RP, PHASE 11, LOHAS PARK
TSEUNG KWAN O, N.T.

TITLE :
TYPICAL FLOOR PLAN
AT TOWER 1

DATE : 22-OCT-21	SCALE : 1:75(A1)
DRAWN BY : KY	CHECKED BY : YB

美特鋁質有限公司
MIDI ALUMINIUM FABRICATOR LTD.
Units 6-8, Sunray Industrial Centre, 1/F
610 Cha Kwo Ling Road, Kowloon
Tel:23489211-4 Fax:(852)27727666

DWG NO. : J858-CW-LP102 REV. : C

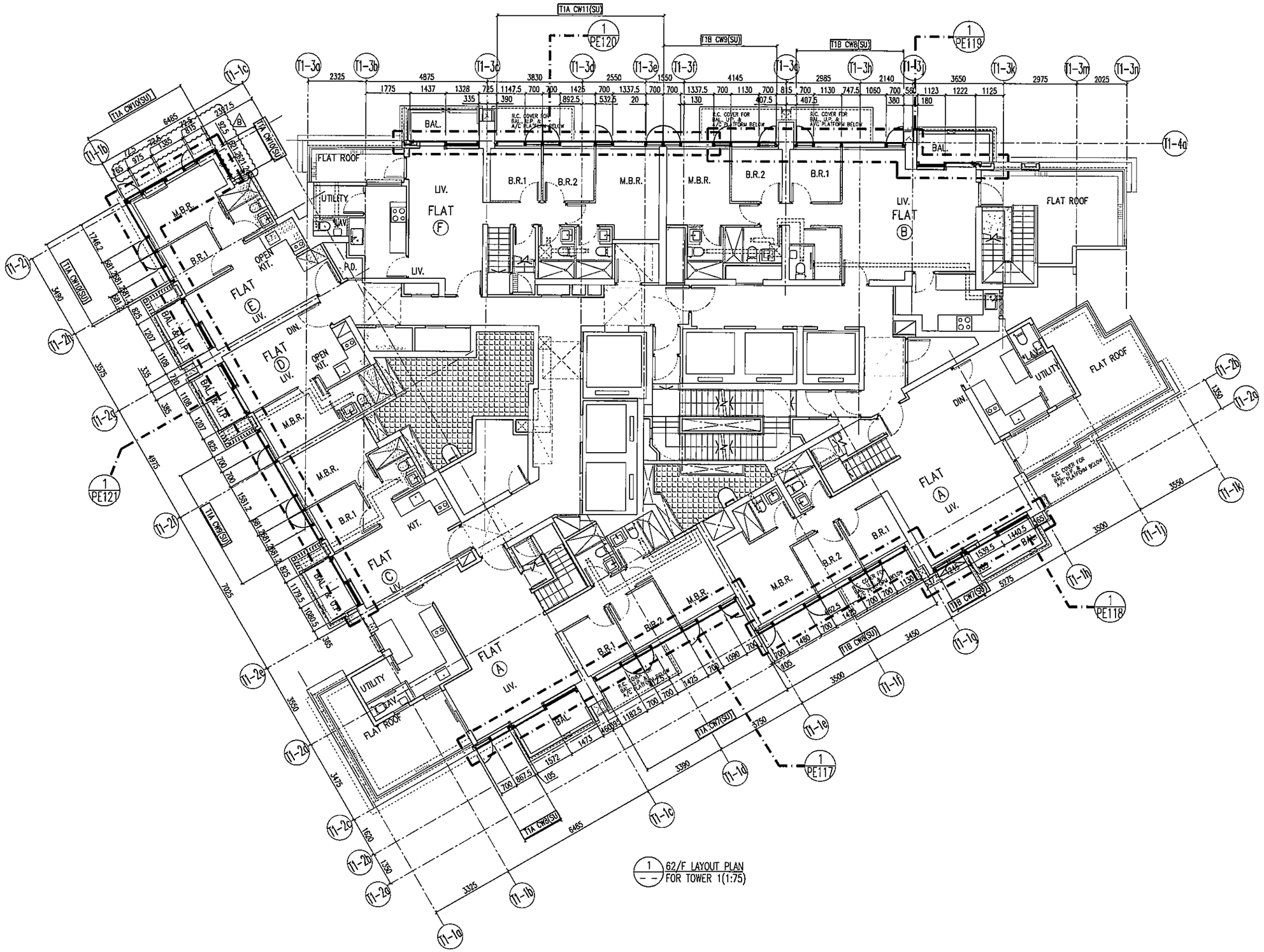

1 62/F LAYOUT PLAN
FOR TOWER 1(1:75)

B.D. REF :

CLIENT :
信和置業有限公司
Sino Land Company Limited

ARCHITECT :
ronald lu & partners
Architects . Planners . Interior Designers
Ronald Lu & Partners (HK) Ltd.
呂元祥建築師事務所(香港)有限公司

MAIN CONTRACTOR :
Gammon

STRUCTURAL ENGINEER :
AECOM

FACADE CONSULTANT:
AECOM

NOTE :
1. ALL DIMENSIONS ARE IN mm.
2. ALL ELEVATIONS ARE VIEWED FROM OUTSIDE.
3. ALL DIMENSIONS TO BE VERIFIED ON SITE BEFORE FABRICATION.

LEGEND :
X1 — DETAIL MARK NO.
X001 — REFER SHEET NO.

1. F.F.L. --FINISHED FLOOR LEVEL
2. S.F.L. --STRUCTURAL FLOOR LEVEL
3. (R) ---REVERSED DETAIL

NO.	DATE	REVISED	BY
B	26/05/22	REVISED AS PER COMMENTS	LS
A	06/04/22	REVISED AS PER COMMENTS	LS

JOB NO. : J-858

PROJECT :
PROPOSED RESIDENTIAL DEVELOPMENT
AT TKOTL 70RP, PHASE 11, LOHAS PARK
TSEUNG KWAN O, N.T.

TITLE :
PENTHOUSE LAYOUT PLAN
AT TOWER 1

DATE : 22-OCT-21 | SCALE : 1:75(A1)

DRAWN BY : KY | CHECKED BY : YB

美特鋁質有限公司
MIDI ALUMINIUM FABRICATOR LTD.
Units 6-8, Sunray Industrial Centre, 1/F
610 Cha Kwo Ling Road, Kowloon
Tel:23489211-4 Fax:(852)27727666

DWG NO. : J858-CW-LP103 | REV. : B

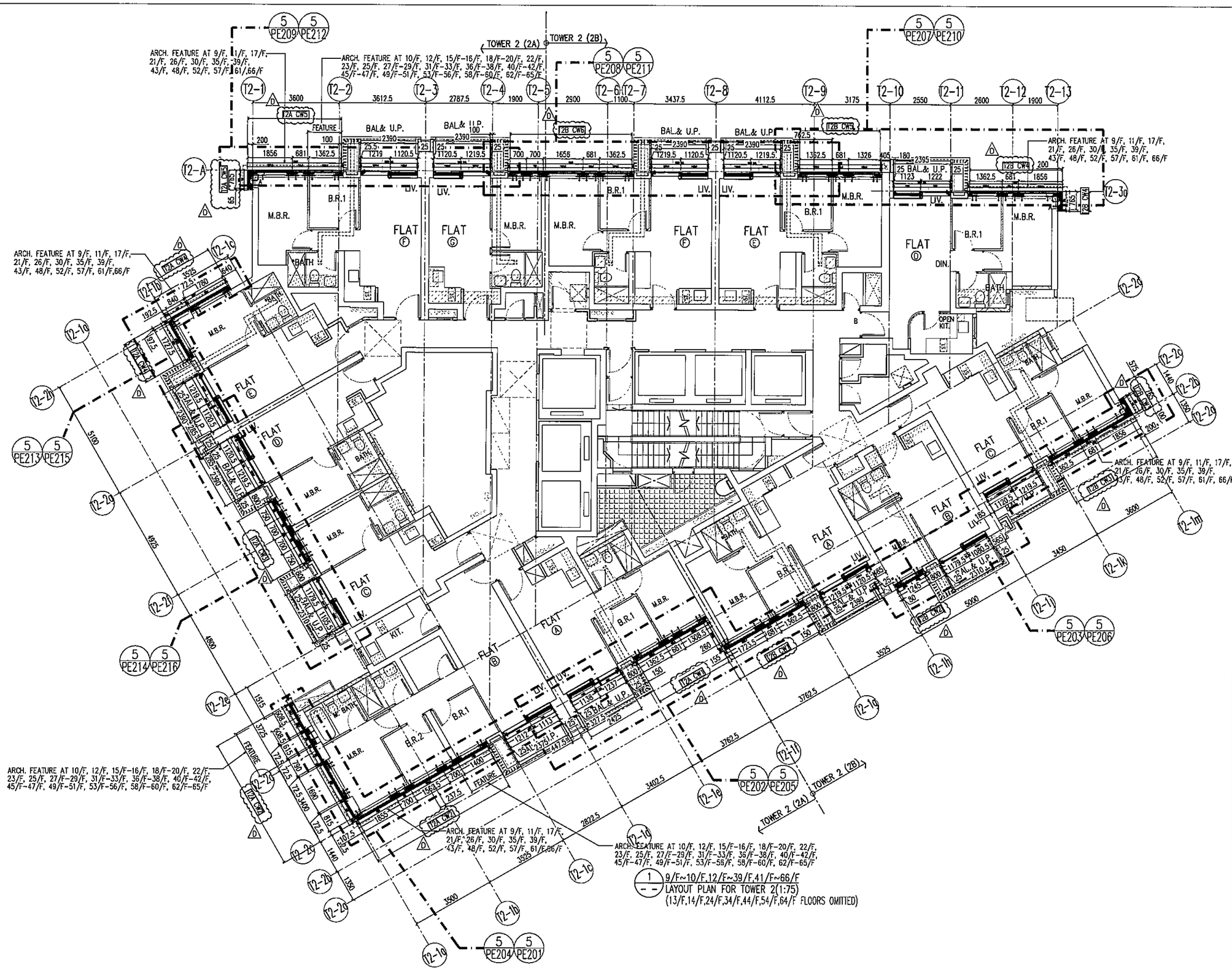

B.D. REF :

CLIENT :
信和置業有限公司
Sino Land Company Limited

ARCHITECT :
ronald lu & partners
Architects . Planners . Interior Designers
Ronald Lu & Partners (HK) Ltd.
呂元祥建築師事務所(香港)有限公司

MAIN CONTRACTOR :
Gammon

STRUCTURAL ENGINEER :
AECOM

FACADE CONSULTANT:
AECOM

NOTE :
1. ALL DIMENSIONS ARE IN mm.
2. ALL ELEVATIONS ARE VIEWED FROM OUTSIDE.
3. ALL DIMENSIONS TO BE VERIFIED ON SITE BEFORE FABRICATION.

LEGEND :
(X1 / X001) — X1 DETAIL MARK NO., X001 REFER SHEET NO.
1. F.F.L. --FINISHED FLOOR LEVEL
2. S.F.L. --STRUCTURAL FLOOR LEVEL
3. (/R) --REVERSED DETAIL

NO.	DATE	REVISED	BY
D	12/04/22	REVISED AS PER COMMENTS	LS
C	23/02/22	REVISED AS PER COMMENTS	LS
B	20/12/21	REVISED AS PER COMMENTS	LS
A	03/12/21	REVISED AS PER COMMENTS	LS

JOB NO. : J-858

PROJECT :
PROPOSED RESIDENTIAL DEVELOPMENT
AT TKOTL 70RP, PHASE 11, LOHAS PARK
TSEUNG KWAN O, N.T.

TITLE :
TYPICAL FLOOR PLAN
AT TOWER 2

DATE : 22-OCT-21 | SCALE : 1:75(A1)

DRAWN BY : KY | CHECKED BY : YB

美特鋁質有限公司
MIDI ALUMINIUM FABRICATOR LTD.
Units 6-8, Sunray Industrial Centre, 1/F
610 Cha Kwo Ling Road, Kowloon
Tel:23489211-4 Fax:(852)27727666

DWG NO. : J858-CW-LP201 | REV. : D

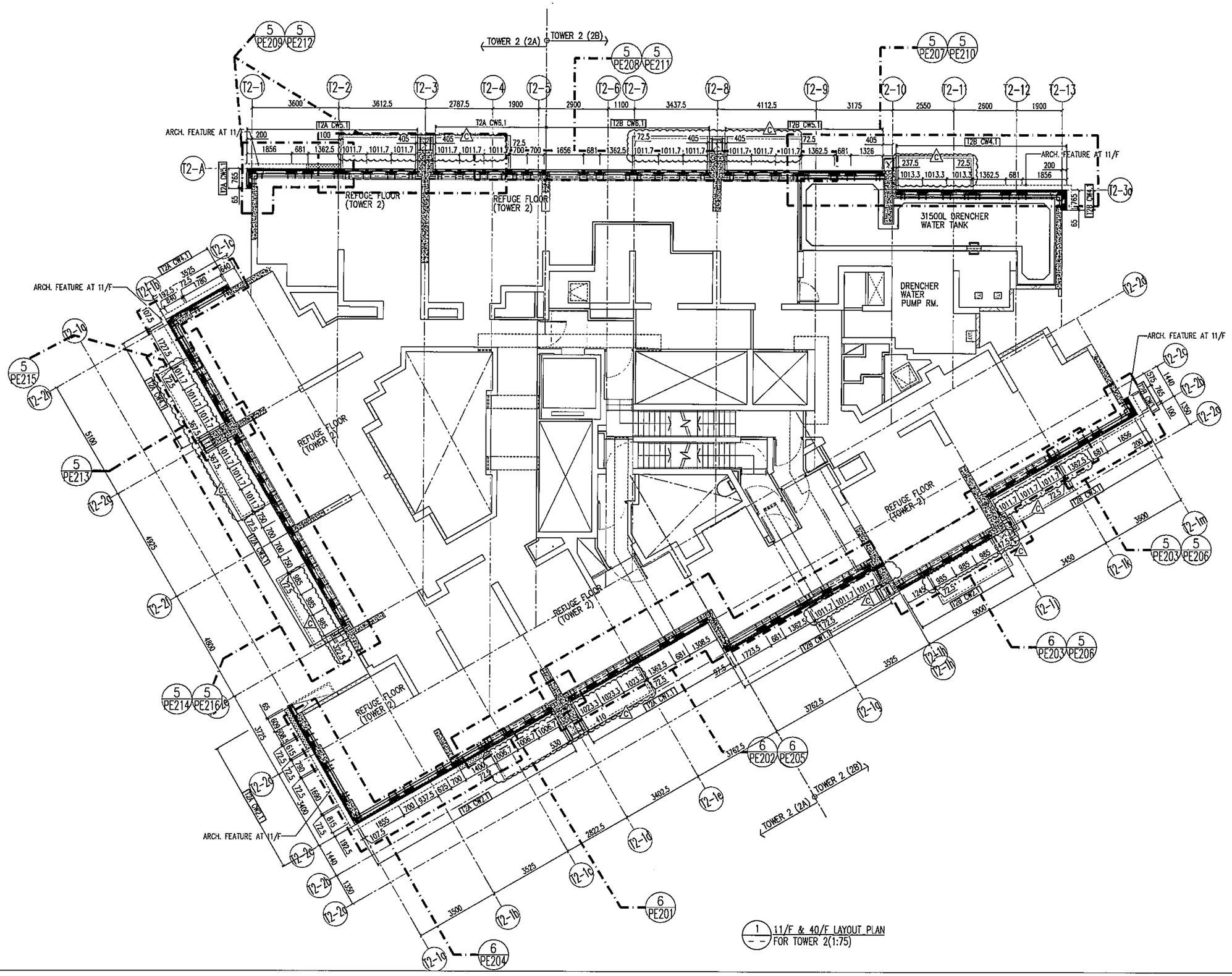

1 11/F & 40/F LAYOUT PLAN FOR TOWER 2(1:75)

B.D. REF :

CLIENT :
信和置業有限公司
Sino Land Company Limited

ARCHITECT :
ronald lu & partners
Architects . Planners . Interior Designers
Ronald Lu & Partners (HK) Ltd.
呂元祥建築師事務所(香港)有限公司

MAIN CONTRACTOR :
Gammon

STRUCTURAL ENGINEER :
AECOM

FACADE CONSULTANT:
AECOM

NOTE :
1. ALL DIMENSIONS ARE IN mm.
2. ALL ELEVATIONS ARE VIEWED FROM OUTSIDE.
3. ALL DIMENSIONS TO BE VERIFIED ON SITE BEFORE FABRICATION.

LEGEND :
XY — DETAIL MARK NO.
XOO1 — REFER SHEET NO.

1. F.F.L. --FINISHED FLOOR LEVEL
2. S.F.L. --STRUCTURAL FLOOR LEVEL
3. /R --REVERSED DETAIL

NO.	DATE	REVISED	BY
C	30/05/22	REVISED AS PER COMMENTS	LS
B	06/04/22	REVISED AS PER COMMENTS	LS
A	23/02/22	REVISED AS PER COMMENTS	LS

JOB NO. : J-858

PROJECT :
PROPOSED RESIDENTIAL DEVELOPMENT
AT TKOTL 70RP, PHASE 11, LOHAS PARK
TSEUNG KWAN O, N.T.

TITLE :
11/F & 40/F REFUGE FLOOR PLAN
AT TOWER 2

DATE : 22-OCT-21 | SCALE : 1:75(A1)

DRAWN BY : KY | CHECKED BY : YB

美特鋁質有限公司
MIDI ALUMINIUM FABRICATOR LTD.
Units 6-8, Sunray Industrial Centre, 1/F
610 Cha Kwo Ling Road, Kowloon
Tel:23489211-4 Fax:(852)27727666

DWG NO. : J858-CW-LP202 | REV. : C

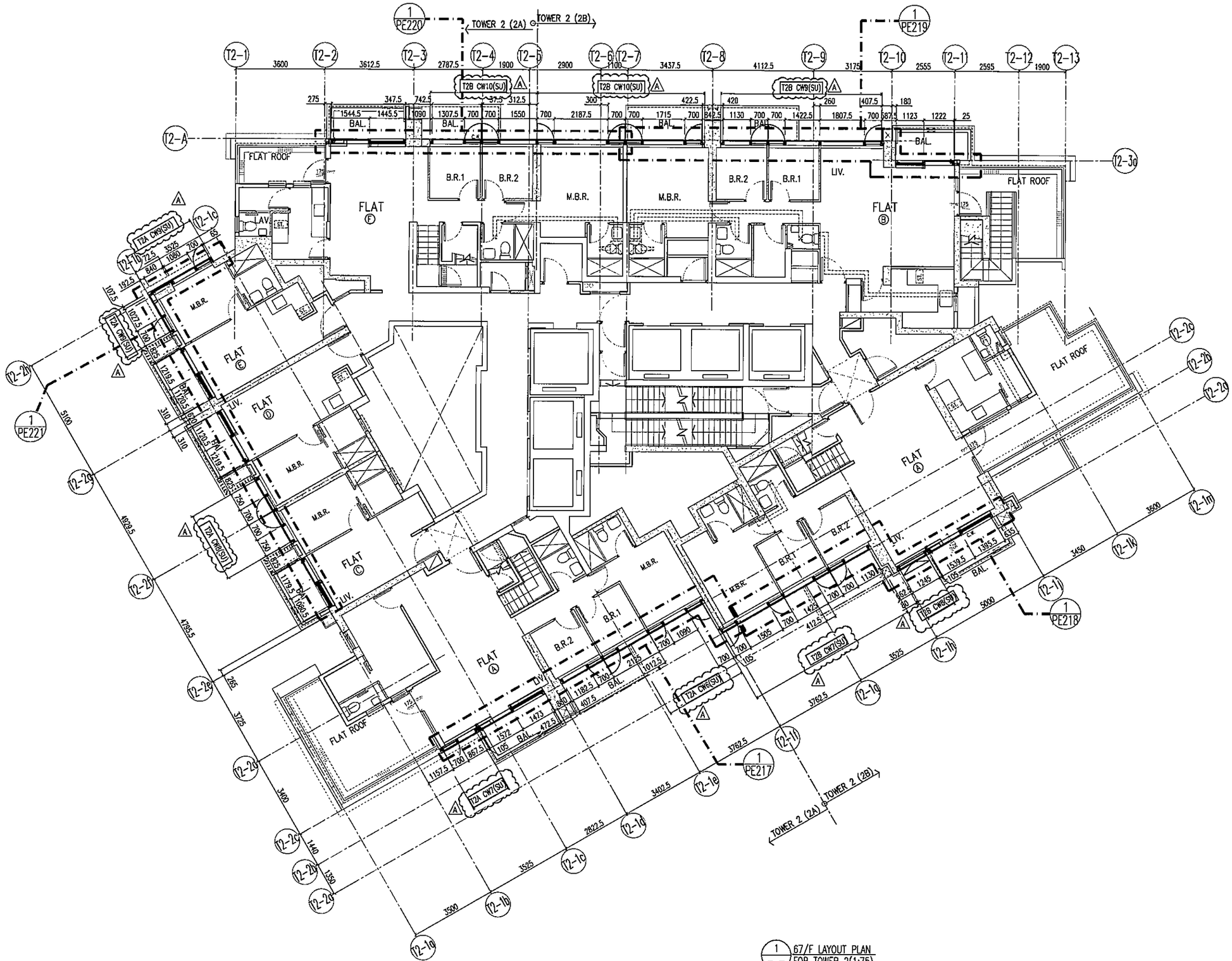

1 / -- 67/F LAYOUT PLAN FOR TOWER 2(1:75)

B.D. REF :

CLIENT :
信和置業有限公司
Sino Land Company Limited

ARCHITECT :
ronald lu & partners
Architects . Planners . Interior Designers
Ronald Lu & Partners (HK) Ltd.
呂元祥建築師事務所(香港)有限公司

MAIN CONTRACTOR :
Gammon

STRUCTURAL ENGINEER :
AECOM

FACADE CONSULTANT:
AECOM

NOTE :
1. ALL DIMENSIONS ARE IN mm.
2. ALL ELEVATIONS ARE VIEWED FROM OUTSIDE.
3. ALL DIMENSIONS TO BE VERIFIED ON SITE BEFORE FABRICATION.

LEGEND :
X1 / X001 — DETAIL MARK NO. / REFER SHEET NO.
1. F.F.L. --FINISHED FLOOR LEVEL
2. S.F.L. --STRUCTURAL FLOOR LEVEL
3. /R --REVERSED DETAIL

NO.	DATE	REVISED	BY
A	05/04/22	REVISED AS PER COMMENTS	LS

JOB NO. : J-858

PROJECT :
PROPOSED RESIDENTIAL DEVELOPMENT
AT TKOTL 70RP, PHASE 11, LOHAS PARK
TSEUNG KWAN O, N.T.

TITLE :
PENTHOUSE LAYOUT PLAN
AT TOWER 2

DATE : 22-OCT-21 | SCALE : 1:75(A1)

DRAWN BY : KY | CHECKED BY : YB

美特鋁質有限公司
MIDI ALUMINIUM FABRICATOR LTD.
Units 6-8, Sunray Industrial Centre, 1/F
610 Cha Kwo Ling Road, Kowloon
Tel:23489211-4 Fax:(852)27727666

DWG NO. : J858-CW-LP203 | REV. : A

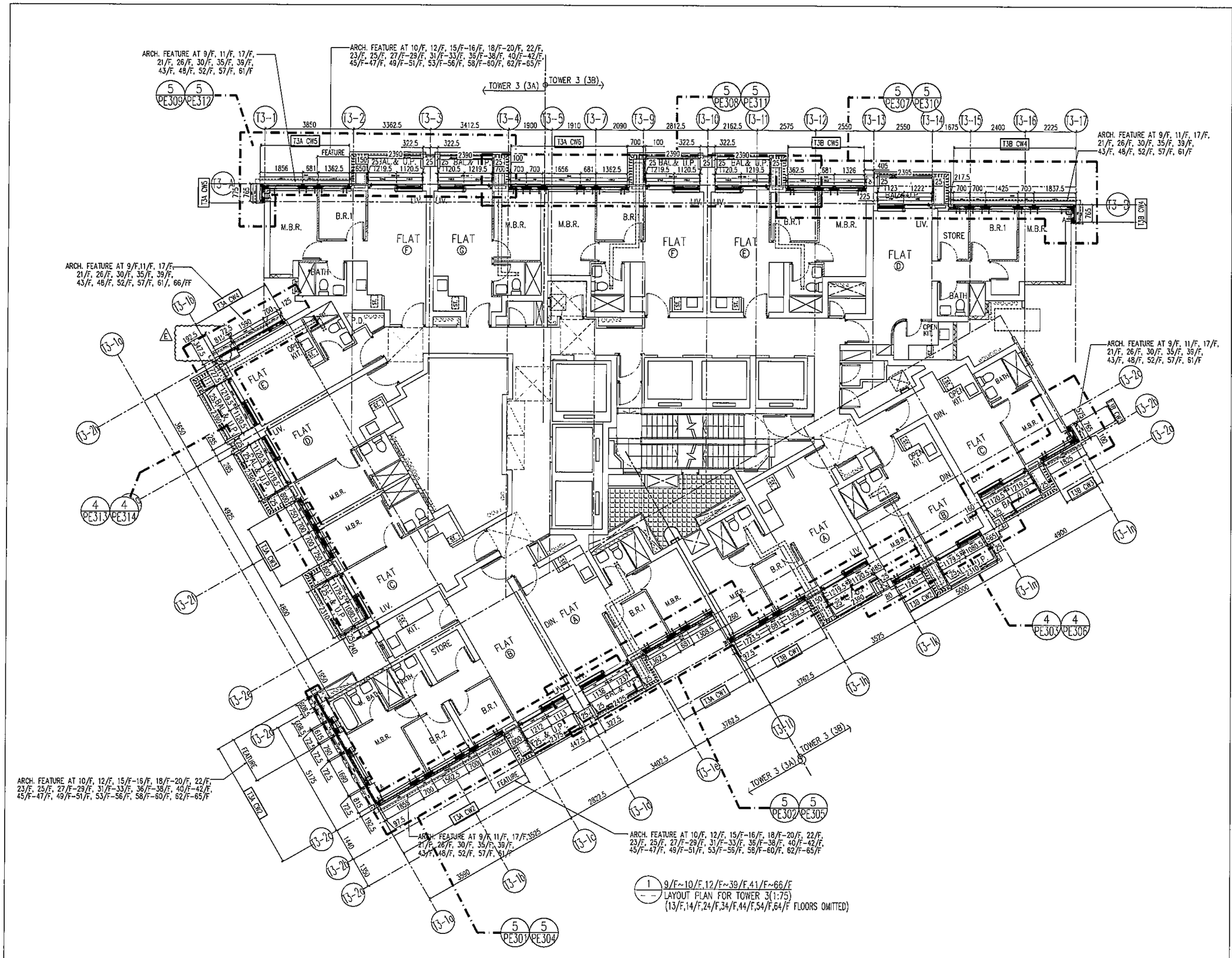

B.D. REF :

CLIENT :
信和置業有限公司
Sino Land Company Limited

ARCHITECT :
ronald lu & partners
Architects . Planners . Interior Designers
Ronald Lu & Partners (HK) Ltd.
呂元祥建築師事務所(香港)有限公司

MAIN CONTRACTOR :
Gammon

STRUCTURAL ENGINEER :
AECOM

FACADE CONSULTANT:
AECOM

NOTE :
1. ALL DIMENSIONS ARE IN mm.
2. ALL ELEVATIONS ARE VIEWED FROM OUTSIDE.
3. ALL DIMENSIONS TO BE VERIFIED ON SITE BEFORE FABRICATION.

LEGEND :
X1 — DETAIL MARK NO.
X001 — REFER SHEET NO.
1. F.F.L. --FINISHED FLOOR LEVEL
2. S.F.L. --STRUCTURAL FLOOR LEVEL
3. /R --REVERSED DETAIL

NO.	DATE	REVISED	BY
E	30/05/22	REVISED AS PER COMMENTS	LS
D	06/04/22	REVISED AS PER COMMENTS	LS
C	23/02/22	REVISED AS PER COMMENTS	LS
B	20/12/21	REVISED AS PER COMMENTS	LS
A	03/12/21	REVISED AS PER COMMENTS	LS

JOB NO. : J-858

PROJECT :
PROPOSED RESIDENTIAL DEVELOPMENT
AT TKOTL 70RP, PHASE 11, LOHAS PARK
TSEUNG KWAN O, N.T.

TITLE :
TYPICAL FLOOR PLAN
AT TOWER 3

DATE : 22-OCT-21 | SCALE : 1:75(A1)
DRAWN BY : KY | CHECKED BY : YB

美特鋁質有限公司
MIDI ALUMINIUM FABRICATOR LTD.
Units 6-8, Sunray Industrial Centre, 1/F
610 Cha Kwo Ling Road, Kowloon
Tel:23489211-4 Fax:(852)27727666

DWG NO. : J858--CW-LP301 | REV. : E

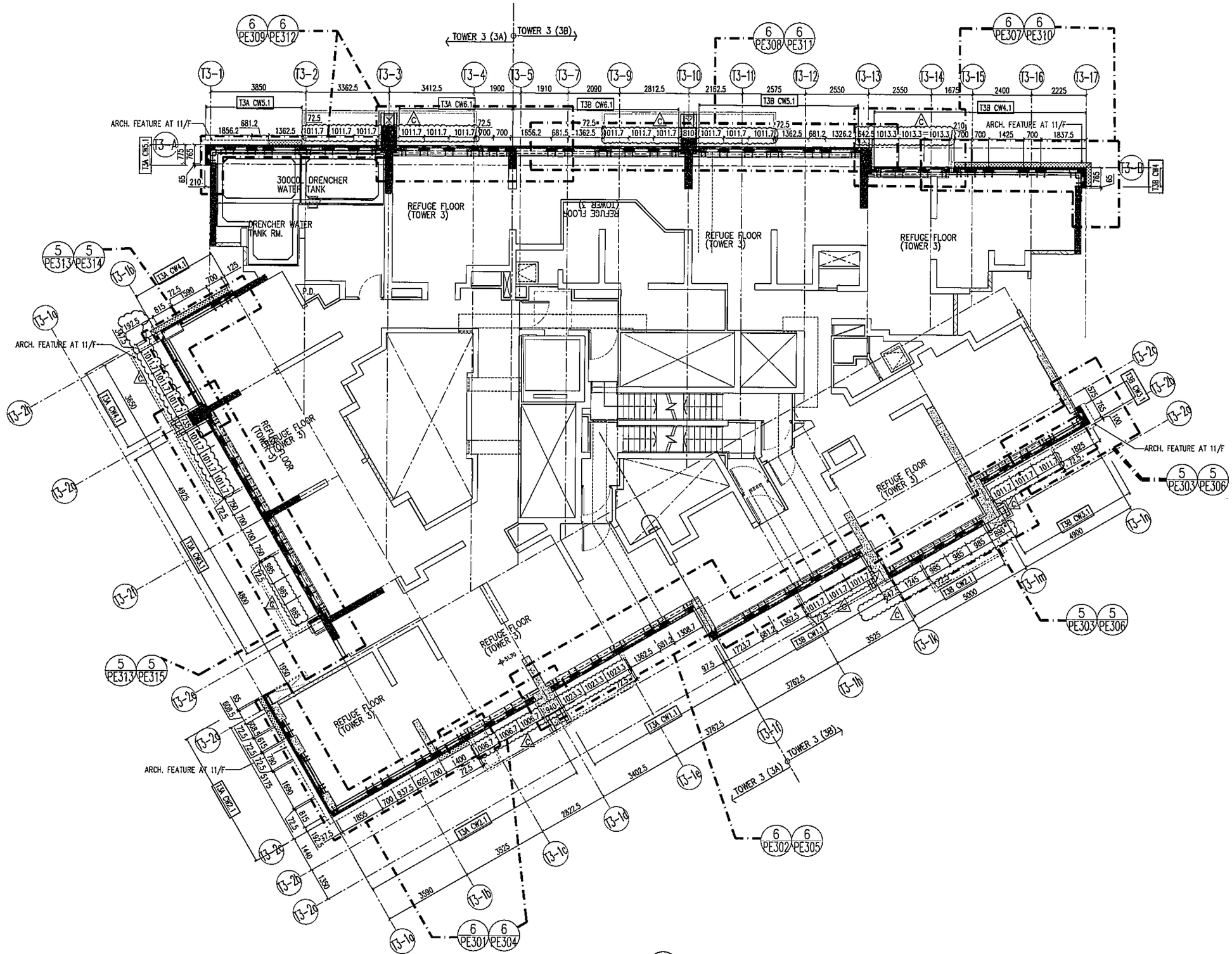

1 11/F & 40/F LAYOUT PLAN FOR TOWER 3(1:75)

B.D. REF :

CLIENT :
信和置業有限公司
Sino Land Company Limited

ARCHITECT :
ronald lu & partners
Architects . Planners . Interior Designers
Ronald Lu & Partners (HK) Ltd.
呂元祥建築師事務所(香港)有限公司

MAIN CONTRACTOR :
Gammon

STRUCTURAL ENGINEER :
AECOM

FACADE CONSULTANT:
AECOM

NOTE :
1. ALL DIMENSIONS ARE IN mm.
2. ALL ELEVATIONS ARE VIEWED FROM OUTSIDE.
3. ALL DIMENSIONS TO BE VERIFIED ON SITE BEFORE FABRICATION.

LEGEND :
X1 / X001 — DETAIL MARK NO. / REFER SHEET NO.
1. F.F.L. --FINISHED FLOOR LEVEL
2. S.F.L. --STRUCTURAL FLOOR LEVEL
3. (/R) --REVERSED DETAIL

NO.	DATE	REVISED	BY
C	30/05/22	REVISED AS PER COMMENTS	LS
B	06/04/22	REVISED AS PER COMMENTS	LS
A	23/02/22	REVISED AS PER COMMENTS	LS

JOB NO. : J-858

PROJECT :
PROPOSED RESIDENTIAL DEVELOPMENT
AT TKOTL 70RP, PHASE 11, LOHAS PARK
TSEUNG KWAN O, N.T.

TITLE :
11/F & 40/F REFUGE FLOOR PLAN
AT TOWER 3

DATE : 22-OCT-21 | SCALE : 1:75(A1)

DRAWN BY : KY | CHECKED BY : YB

美特鋁質有限公司
MIDI ALUMINIUM FABRICATOR LTD.
Units 6-8, Sunray Industrial Centre, 1/F
610 Cha Kwo Ling Road, Kowloon
Tel:23489211-4 Fax:(852)27727666

DWG NO. : J858-CW-LP302 | REV. : C

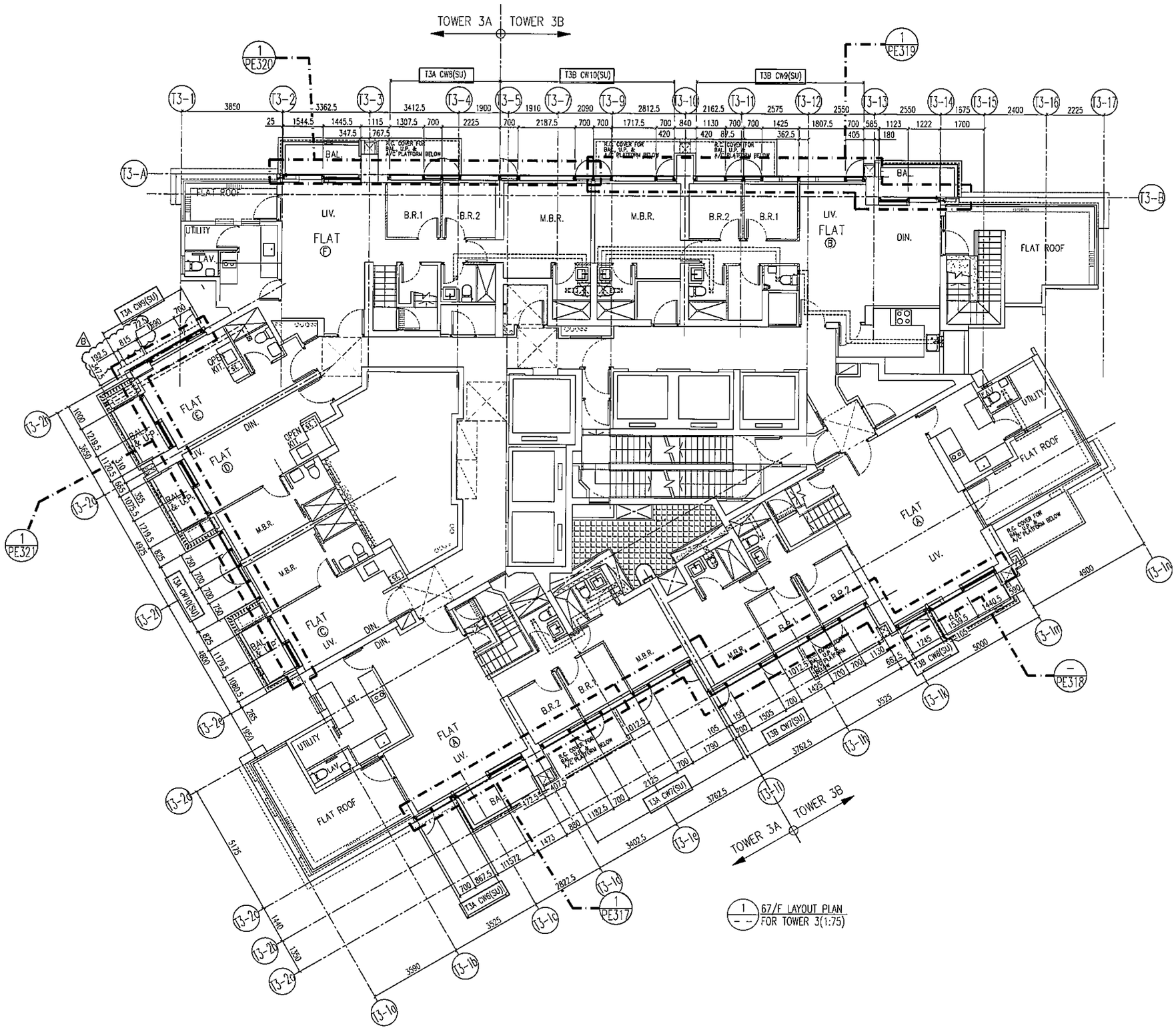

B.D. REF :

CLIENT :
信和置業有限公司
Sino Land Company Limited

ARCHITECT :
ronald lu & partners
Architects . Planners . Interior Designers
Ronald Lu & Partners (HK) Ltd.
呂元祥建築師事務所(香港)有限公司

MAIN CONTRACTOR :
Gammon

STRUCTURAL ENGINEER :
AECOM

FACADE CONSULTANT:
AECOM

NOTE :
1. ALL DIMENSIONS ARE IN mm.
2. ALL ELEVATIONS ARE VIEWED FROM OUTSIDE.
3. ALL DIMENSIONS TO BE VERIFIED ON SITE BEFORE FABRICATION.

LEGEND :
X1 — DETAIL MARK NO.
XD01 — REFER SHEET NO.
1. F.F.L. -- FINISHED FLOOR LEVEL
2. S.F.L. -- STRUCTURAL FLOOR LEVEL
3. /R -- REVERSED DETAIL

NO.	DATE	REVISED	BY
B	30/05/22	REVISED AS PER COMMENTS	LS
A	06/04/22	REVISED AS PER COMMENTS	LS

JOB NO. : J-858

PROJECT :
PROPOSED RESIDENTIAL DEVELOPMENT
AT TKOTL 70RP, PHASE 11, LOHAS PARK
TSEUNG KWAN O, N.T.

TITLE :
PENTHOUSE LAYOUT PLAN
AT TOWER 3

DATE : 22-OCT-21 | SCALE : 1:75(A1)

DRAWN BY : KY | CHECKED BY : YB

美特鋁質有限公司
MIDI ALUMINIUM FABRICATOR LTD.
Units 6-8, Sunray Industrial Centre, 1/F
610 Cha Kwo Ling Road, Kowloon
Tel:23489211-4 Fax:(852)27727666

DWG NO. : J858-CW-LP303 | REV. : B

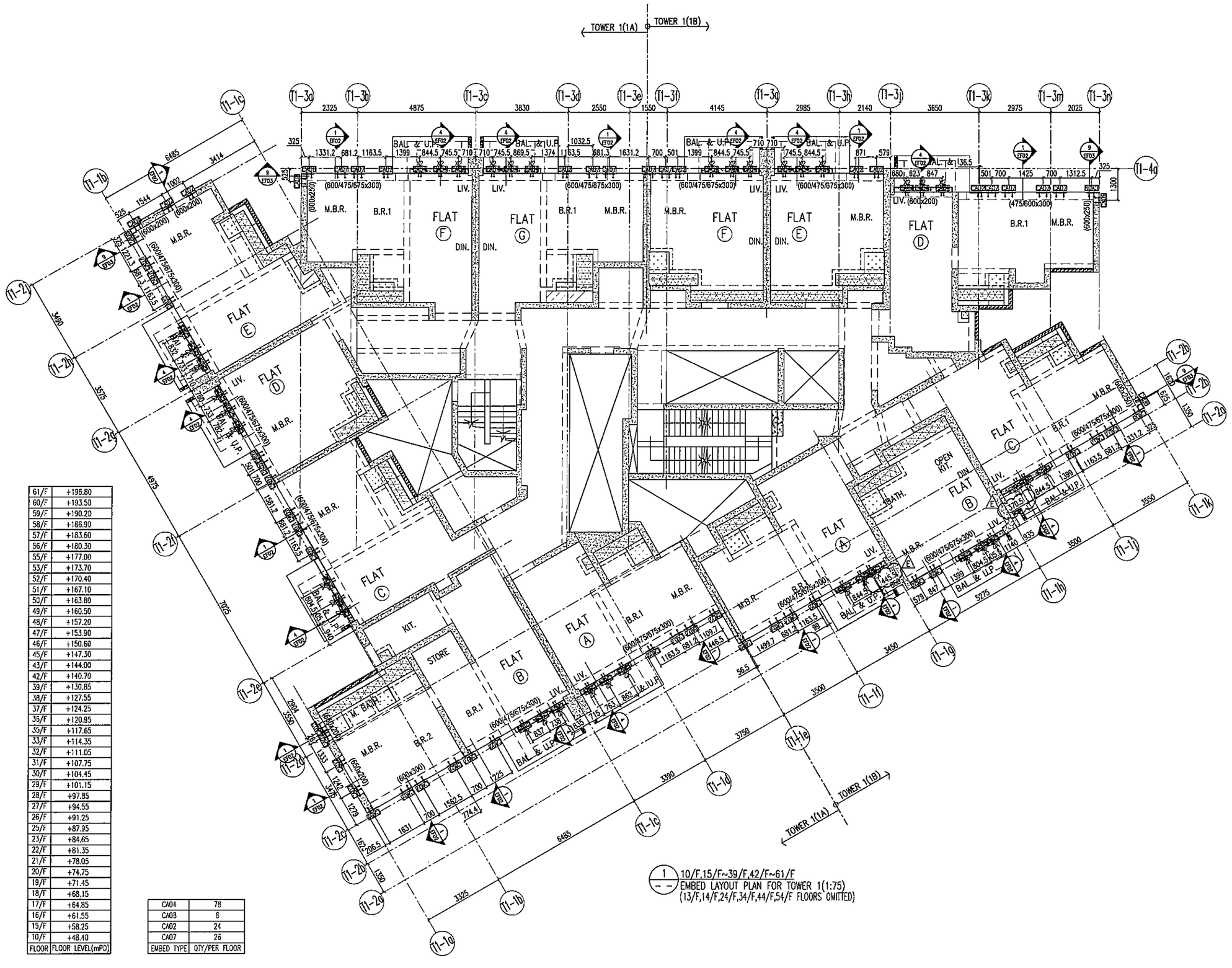

61/F	+196.80
60/F	+193.50
59/F	+190.20
58/F	+186.90
57/F	+183.60
56/F	+180.30
55/F	+177.00
53/F	+173.70
52/F	+170.40
51/F	+167.10
50/F	+163.80
49/F	+160.50
48/F	+157.20
47/F	+153.90
46/F	+150.60
45/F	+147.30
43/F	+144.00
42/F	+140.70
39/F	+130.85
38/F	+127.55
37/F	+124.25
35/F	+120.95
35/F	+117.65
33/F	+114.35
32/F	+111.05
31/F	+107.75
30/F	+104.45
29/F	+101.15
28/F	+97.85
27/F	+94.55
26/F	+91.25
25/F	+87.95
23/F	+84.65
22/F	+81.35
21/F	+78.05
20/F	+74.75
19/F	+71.45
18/F	+68.15
17/F	+64.85
16/F	+61.55
15/F	+58.25
10/F	+48.40
FLOOR	FLOOR LEVEL(mPD)

CA04	78
CA03	8
CA02	24
CA07	26
EMBED TYPE	QTY/PER FLOOR

1 / -- 10/F,15/F~39/F,42/F~61/F
EMBED LAYOUT PLAN FOR TOWER 1(1:75)
(13/F,14/F,24/F,34/F,44/F,54/F FLOORS OMITTED)

B.D. REF :

CLIENT :
信和置業有限公司
Sino Land Company Limited

ARCHITECT :
ronald lu & partners
Architects . Planners . Interior Designers
Ronald Lu & Partners (HK) Ltd.
呂元祥建築師事務所(香港)有限公司

MAIN CONTRACTOR :
Gammon

STRUCTURAL ENGINEER :
AECOM

FACADE CONSULTANT:
AECOM

NOTE :
1. ALL DIMENSIONS ARE IN mm.
2. ALL ELEVATIONS ARE VIEWED FROM OUTSIDE.
3. ALL DIMENSIONS TO BE VERIFIED ON SITE BEFORE FABRICATION.

LEGEND :
X1 — DETAIL MARK NO.
X00 — REFER SHEET NO.

1. F.F.L. --FINISHED FLOOR LEVEL
2. S.F.L. --STRUCTURAL FLOOR LEVEL
3. (YB) --REVERSED DETAIL

NO.	DATE	REVISED	BY
E	26/05/22	REVISED AS PER COMMENTS	LS
D	06/04/22	REVISED AS PER COMMENTS	LS
C	16/02/22	REVISED AS PER COMMENTS	LS
B	20/12/21	REVISED AS PER COMMENTS	LS
A	03/12/21	REVISED AS PER COMMENTS	LS

JOB NO. : J-858

PROJECT :
PROPOSED RESIDENTIAL DEVELOPMENT
AT TKOTL 70RP, PHASE 11, LOHAS PARK
TSEUNG KWAN O, N.T.

TITLE :
TYPICAL FLOOR EMBED LAYOUT PLAN
AT TOWER 1

DATE : 22-OCT-21 | SCALE : 1:75(A1)

DRAWN BY : KY | CHECKED BY : YB

美特鋁質有限公司
MIDI ALUMINUM FABRICATOR LTD.
Units 6-8, Sunray Industrial Centre, 1/F
610 Cha Kwo Ling Road, Kowloon
Tel:23489211-4 Fax:(852)27727666

DWG NO. : J858-CW-EP101 | REV. : E

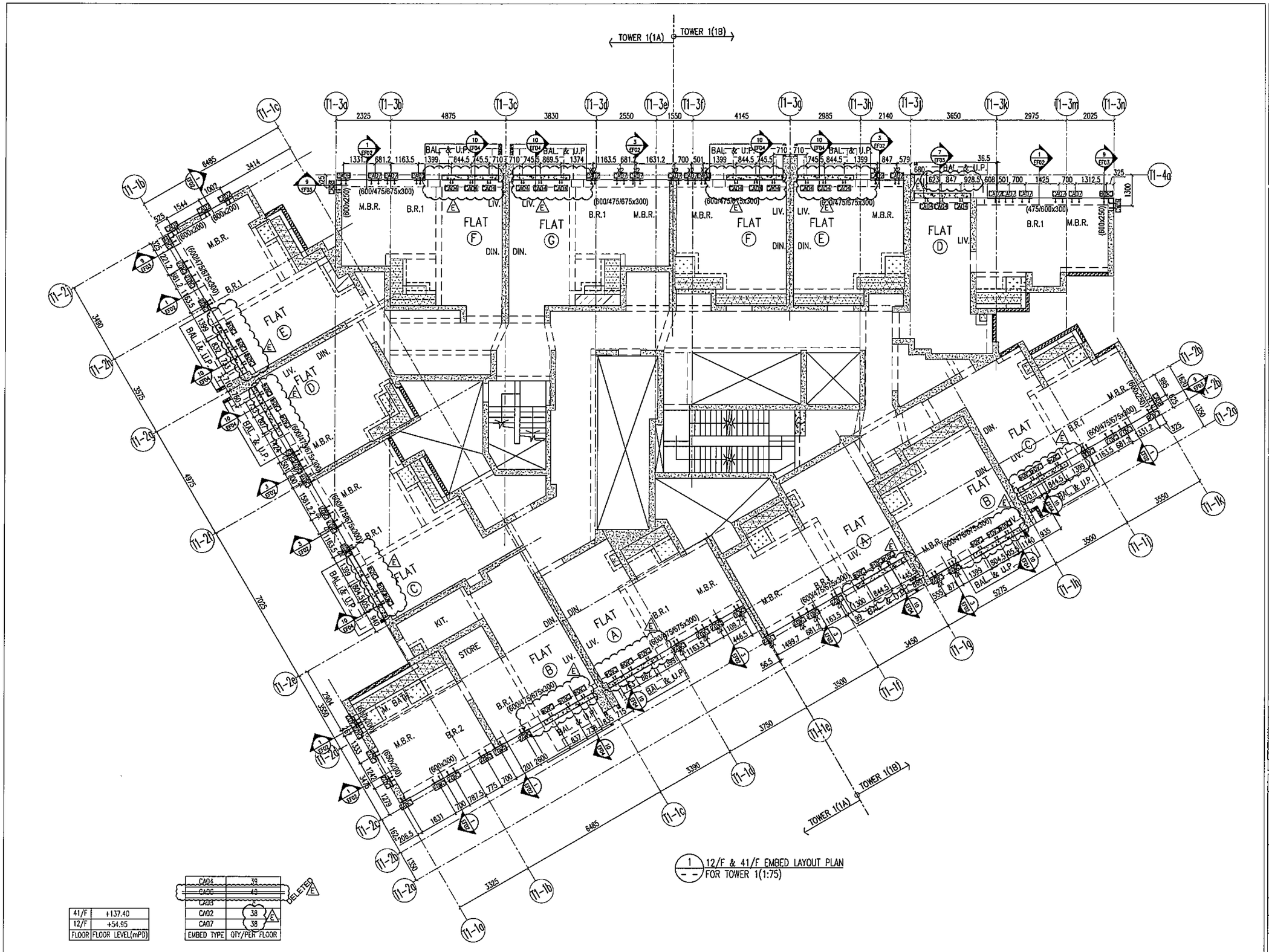

1 / - - 12/F & 41/F EMBED LAYOUT PLAN FOR TOWER 1(1:75)

41/F	+137.40
12/F	+54.95
FLOOR	FLOOR LEVEL(mPD)

EMBED TYPE	QTY/PER FLOOR
CA04	39
CA06	40
CA03	2
CA02	38
CA07	38

DELETED E

B.D. REF :

CLIENT :
信和置業有限公司
Sino Land Company Limited

ARCHITECT :
ronald lu & partners
Architects . Planners . Interior Designers
Ronald Lu & Partners (HK) Ltd.
呂元祥建築師事務所(香港)有限公司

MAIN CONTRACTOR :
Gammon

STRUCTURAL ENGINEER :
AECOM

FACADE CONSULTANT:
AECOM

NOTE :
1. ALL DIMENSIONS ARE IN mm.
2. ALL ELEVATIONS ARE VIEWED FROM OUTSIDE.
3. ALL DIMENSIONS TO BE VERIFIED ON SITE BEFORE FABRICATION.

LEGEND :
X1 — DETAIL MARK NO.
X001 — REFER SHEET NO.
1. F.F.L. -- FINISHED FLOOR LEVEL
2. S.F.L. -- STRUCTURAL FLOOR LEVEL
3. /R -- REVERSED DETAIL

NO.	DATE	REVISED	BY
E	26/05/22	REVISED AS PER COMMENTS	LS
D	06/04/22	REVISED AS PER COMMENTS	LS
C	16/02/22	REVISED AS PER COMMENTS	LS
B	20/12/21	REVISED AS PER COMMENTS	LS
A	03/12/21	REVISED AS PER COMMENTS	LS

JOB NO. : J-858

PROJECT :
PROPOSED RESIDENTIAL DEVELOPMENT
AT TKOTL 70RP, PHASE 11, LOHAS PARK
TSEUNG KWAN O, N.T.

TITLE :
12/F & 41/F EMBED LAYOUT PLAN
AT TOWER 1

DATE : 22-OCT-21 | SCALE : 1:75(A1)

DRAWN BY : KY | CHECKED BY : YB

美特鋁質有限公司
MIDI ALUMINIUM FABRICATOR LTD.
Units 6-8, Sunray Industrial Centre, 1/F
610 Cha Kwo Ling Road, Kowloon
Tel:23489211-4 Fax:(852)27727666

DWG NO. : J858-CW-EP102 | REV. : E

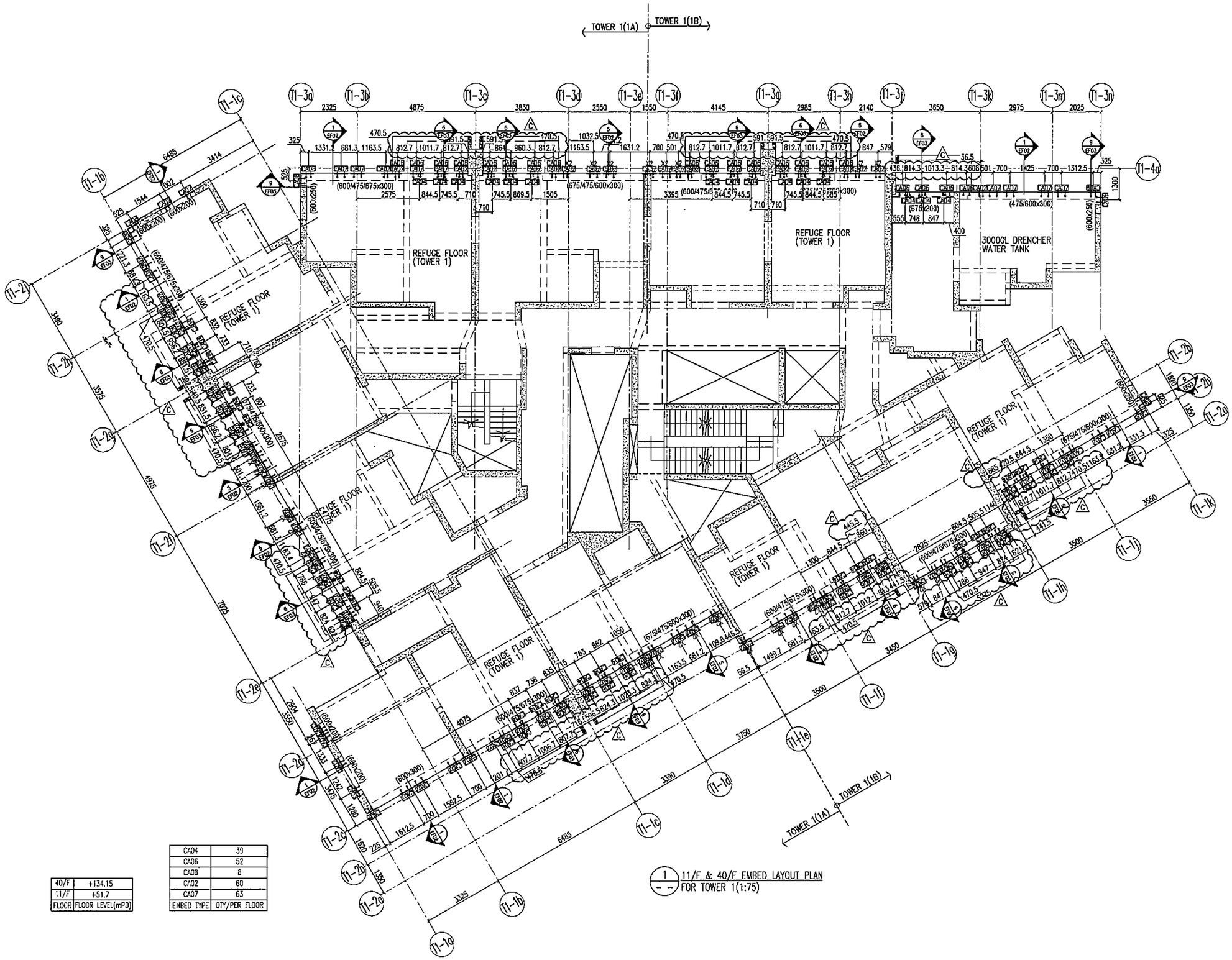

40/F	+134.15
11/F	+51.7
FLOOR	FLOOR LEVEL(mPD)

CA04	39
CA06	52
CA03	8
CA02	60
CA07	63
EMBED TYPE	QTY/PER FLOOR

1 / -- 11/F & 40/F EMBED LAYOUT PLAN FOR TOWER 1(1:75)

B.D. REF :

CLIENT :
信和置業有限公司
Sino Land Company Limited

ARCHITECT :
ronald lu & partners
Architects . Planners . Interior Designers
Ronald Lu & Partners (HK) Ltd.
呂元祥建築師事務所(香港)有限公司

MAIN CONTRACTOR :
Gammon

STRUCTURAL ENGINEER :
AECOM

FACADE CONSULTANT:
AECOM

NOTE :
1. ALL DIMENSIONS ARE IN mm.
2. ALL ELEVATIONS ARE VIEWED FROM OUTSIDE.
3. ALL DIMENSIONS TO BE VERIFIED ON SITE BEFORE FABRICATION.

LEGEND :
X1 / X001 — DETAIL MARK NO. / REFER SHEET NO.
1. F.F.L. --FINISHED FLOOR LEVEL
2. S.F.L. --STRUCTURAL FLOOR LEVEL
3. /R --REVERSED DETAIL

NO.	DATE	REVISED	BY
C	26/05/22	REVISED AS PER COMMENTS	LS
B	06/04/22	REVISED AS PER COMMENTS	LS
A	16/02/22	REVISED AS PER COMMENTS	LS

JOB NO. : J-858

PROJECT :
PROPOSED RESIDENTIAL DEVELOPMENT
AT TKOTL 70RP, PHASE 11, LOHAS PARK
TSEUNG KWAN O, N.T.

TITLE :
11/F & 40/F EMBED LAYOUT PLAN
AT TOWER 1

DATE : 22-OCT-21 | SCALE : 1:75(A1)

DRAWN BY : KY | CHECKED BY : YB

美特鋁質有限公司
MIDI ALUMINIUM FABRICATOR LTD.
Units 6-8, Sunray Industrial Centre, 1/F
610 Cha Kwo Ling Road, Kowloon
Tel:23489211-4 Fax:(852)27727666

DWG NO. : J858-CW-EP103 | REV. : C

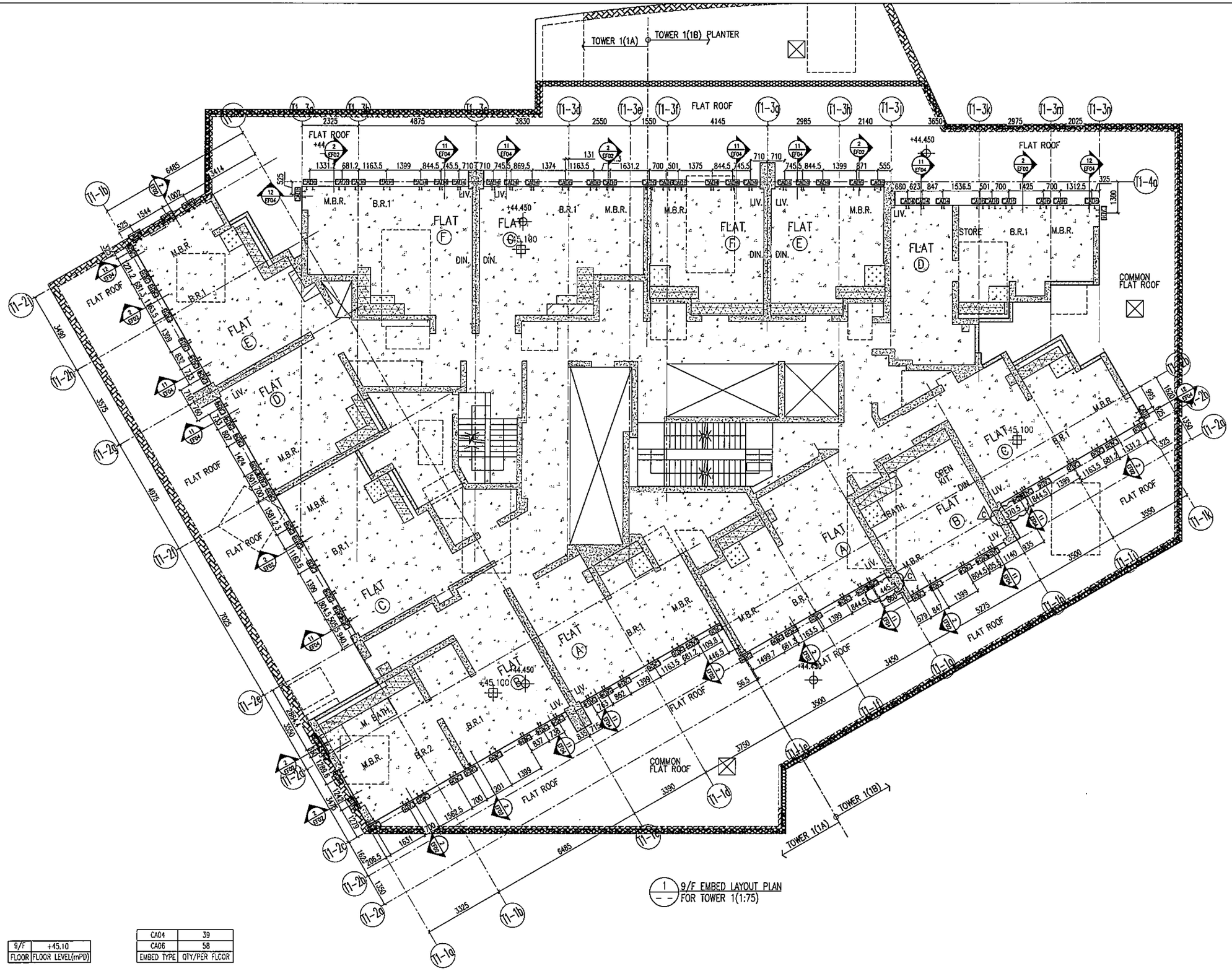

1 9/F EMBED LAYOUT PLAN FOR TOWER 1(1:75)

9/F	+45.10
FLOOR	FLOOR LEVEL(mPD)

CA04	39
CA06	58
EMBED TYPE	QTY/PER FLOOR

B.D. REF :

CLIENT :
信和置業有限公司
Sino Land Company Limited

ARCHITECT :
ronald lu & partners
Architects · Planners · Interior Designers
Ronald Lu & Partners (HK) Ltd.
呂元祥建築師事務所(香港)有限公司

MAIN CONTRACTOR :
Gammon

STRUCTURAL ENGINEER :
AECOM

FACADE CONSULTANT:
AECOM

NOTE :
1. ALL DIMENSIONS ARE IN mm.
2. ALL ELEVATIONS ARE VIEWED FROM OUTSIDE.
3. ALL DIMENSIONS TO BE VERIFIED ON SITE BEFORE FABRICATION.

LEGEND :
X1 — DETAIL MARK NO.
X001 — REFER SHEET NO.
1. F.F.L. --FINISHED FLOOR LEVEL
2. S.F.L. --STRUCTURAL FLOOR LEVEL
3. /R --REVERSED DETAIL

NO.	DATE	REVISED	BY
C	26/05/22	REVISED AS PER COMMENTS	LS
B	06/04/22	REVISED AS PER COMMENTS	LS
A	16/02/22	REVISED AS PER COMMENTS	LS

JOB NO. : J-858

PROJECT :
PROPOSED RESIDENTIAL DEVELOPMENT
AT TKOTL 70RP, PHASE 11, LOHAS PARK
TSEUNG KWAN O, N.T.

TITLE :
TYPICAL FLOOR EMBED LAYOUT PLAN
AT TOWER 1

DATE : 22-OCT-21 | SCALE : 1:75(A1)

DRAWN BY : KY | CHECKED BY : YB

美特鋁質有限公司
MIDI ALUMINIUM FABRICATOR LTD.
Units 6-8, Sunray Industrial Centre, 1/F
610 Cha Kwo Ling Road, Kowloon
Tel:23489211-4 Fax:(852)27727666

DWG NO. : J858-CW-EP104 | REV. : C

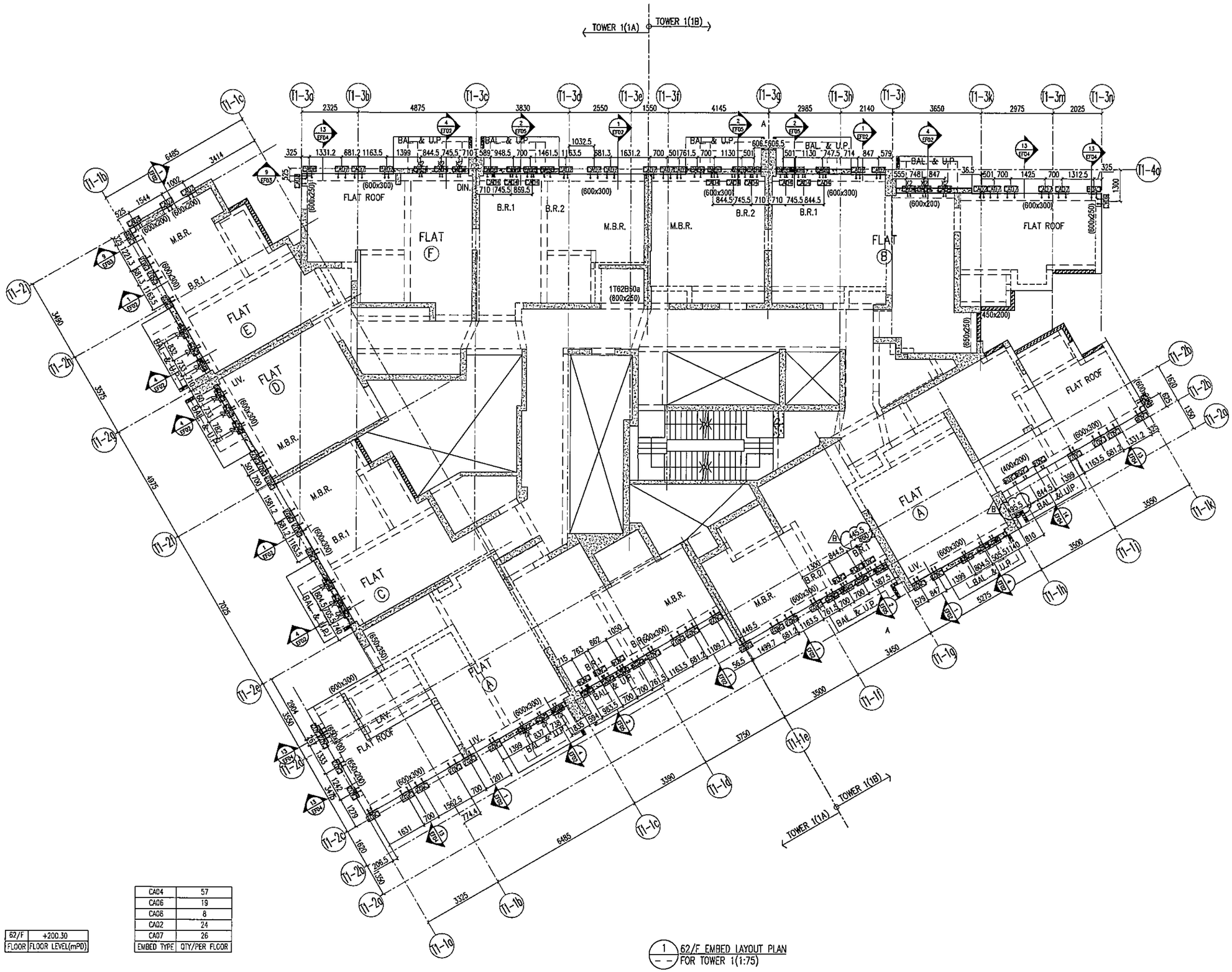

62/F	+200.30
FLOOR	FLOOR LEVEL(mPD)

CA04	57
CA06	19
CA08	8
CA02	24
CA07	26
EMBED TYPE	QTY/PER FLOOR

1 62/F EMBED LAYOUT PLAN
FOR TOWER 1(1:75)

B.D. REF :

CLIENT :
信和置業有限公司
Sino Land Company Limited

ARCHITECT :
ronald lu & partners
Architects . Planners . Interior Designers
Ronald Lu & Partners (HK) Ltd.
呂元祥建築師事務所(香港)有限公司

MAIN CONTRACTOR :
Gammon

STRUCTURAL ENGINEER :
AECOM

FACADE CONSULTANT:
AECOM

NOTE :
1. ALL DIMENSIONS ARE IN mm.
2. ALL ELEVATIONS ARE VIEWED FROM OUTSIDE.
3. ALL DIMENSIONS TO BE VERIFIED ON SITE BEFORE FABRICATION.

LEGEND :
X1 — DETAIL MARK NO.
X001 — REFER SHEET NO.
1. F.F.L. --FINISHED FLOOR LEVEL
2. S.F.L. --STRUCTURAL FLOOR LEVEL
3. (/R) --REVERSED DETAIL

NO.	DATE	REVISED	BY
B	26/05/22	REVISED AS PER COMMENTS	LS
A	16/04/22	REVISED AS PER COMMENTS	LS

JOB NO. : J-858

PROJECT :
PROPOSED RESIDENTIAL DEVELOPMENT
AT TKOTL 70RP, PHASE 11, LOHAS PARK
TSEUNG KWAN O, N.T.

TITLE :
62/F EMBED LAYOUT PLAN
AT TOWER 1

DATE : 22-OCT-21 | SCALE : 1:75(A1)

DRAWN BY : KY | CHECKED BY : YB

美特鋁質有限公司
MIDI ALUMINIUM FABRICATOR LTD.
Units 6-8, Sunray Industrial Centre, 1/F
610 Cha Kwo Ling Road, Kowloon
Tel:23489211-4 Fax:(852)27727666

DWG NO. : J858-CW-EP105 | REV. : B

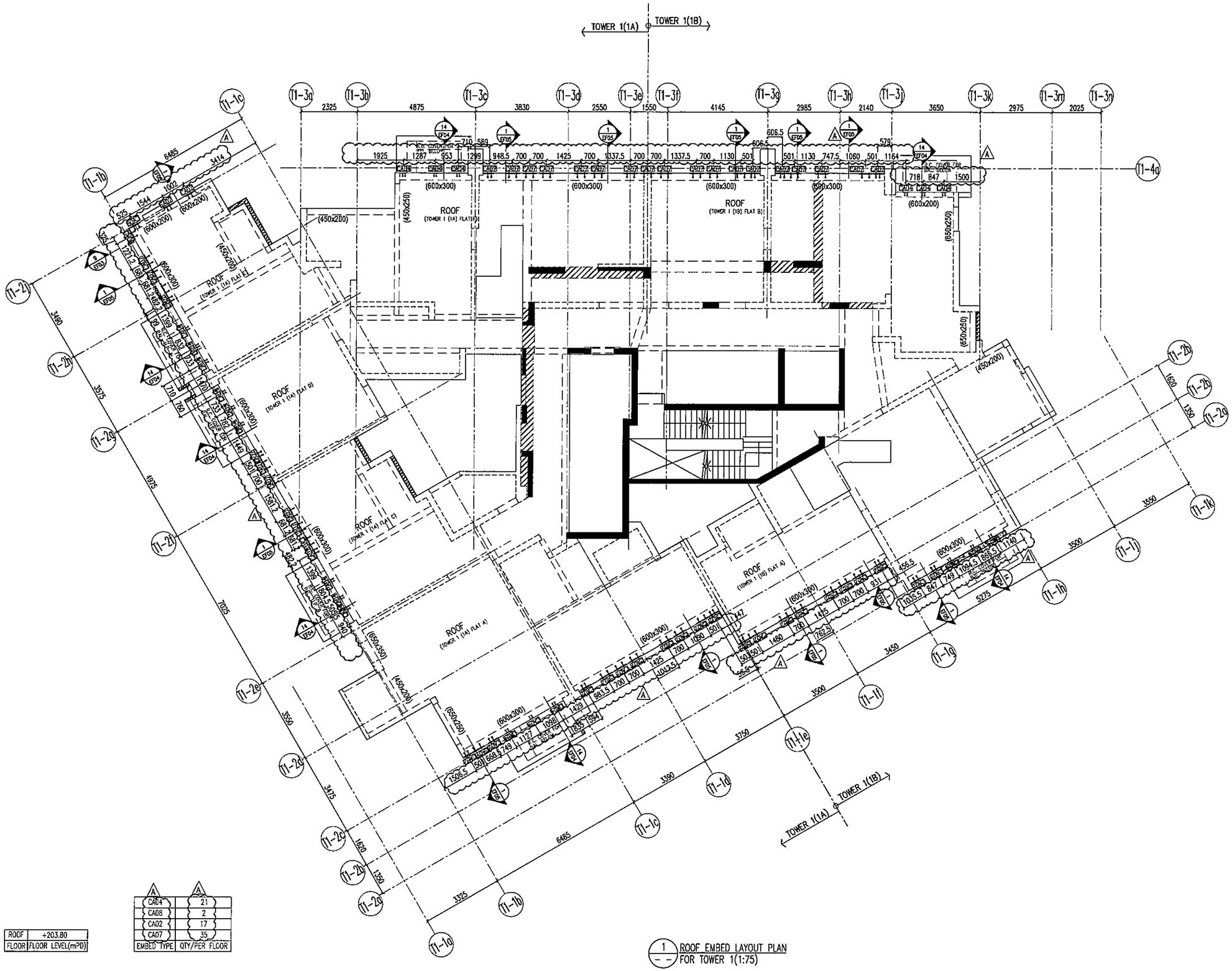

ROOF	+203.80
FLOOR	FLOOR LEVEL(mPD)

EMBED TYPE	QTY/PER FLOOR
CA04	21
CA08	2
CA02	17
CA07	35

1 / -- ROOF EMBED LAYOUT PLAN FOR TOWER 1(1:75)

B.D. REF :

CLIENT :
信和置業有限公司
Sino Land Company Limited

ARCHITECT :
ronald lu & partners
Architects . Planners . Interior Designers
Ronald Lu & Partners (HK) Ltd.
呂元祥建築師事務所(香港)有限公司

MAIN CONTRACTOR :
Gammon

STRUCTURAL ENGINEER :
AECOM

FACADE CONSULTANT:
AECOM

NOTE :
1. ALL DIMENSIONS ARE IN mm.
2. ALL ELEVATIONS ARE VIEWED FROM OUTSIDE.
3. ALL DIMENSIONS TO BE VERIFIED ON SITE BEFORE FABRICATION.

LEGEND :
X1 / X001 — DETAIL MARK NO. / REFER SHEET NO.
1. F.F.L. -- FINISHED FLOOR LEVEL
2. S.F.L. -- STRUCTURAL FLOOR LEVEL
3. /R -- REVERSED DETAIL

NO.	DATE	REVISED	BY
A	16/04/22	REVISED AS PER COMMENTS	LS

JOB NO. : J-858

PROJECT :
PROPOSED RESIDENTIAL DEVELOPMENT
AT TKOTL 70RP, PHASE 11, LOHAS PARK
TSEUNG KWAN O, N.T.

TITLE :
ROOF EMBED LAYOUT PLAN
AT TOWER 1

DATE : 22-OCT-21	SCALE : 1:75(A1)
DRAWN BY : KY	CHECKED BY : YB

美特鋁質有限公司
MIDI ALUMINIUM FABRICATOR LTD.
Units 6-8, Sunray Industrial Centre, 1/F
610 Cha Kwo Ling Road, Kowloon
Tel:23489211-4 Fax:(852)27727666

DWG NO. : J858-CW-EP106 | REV. : A

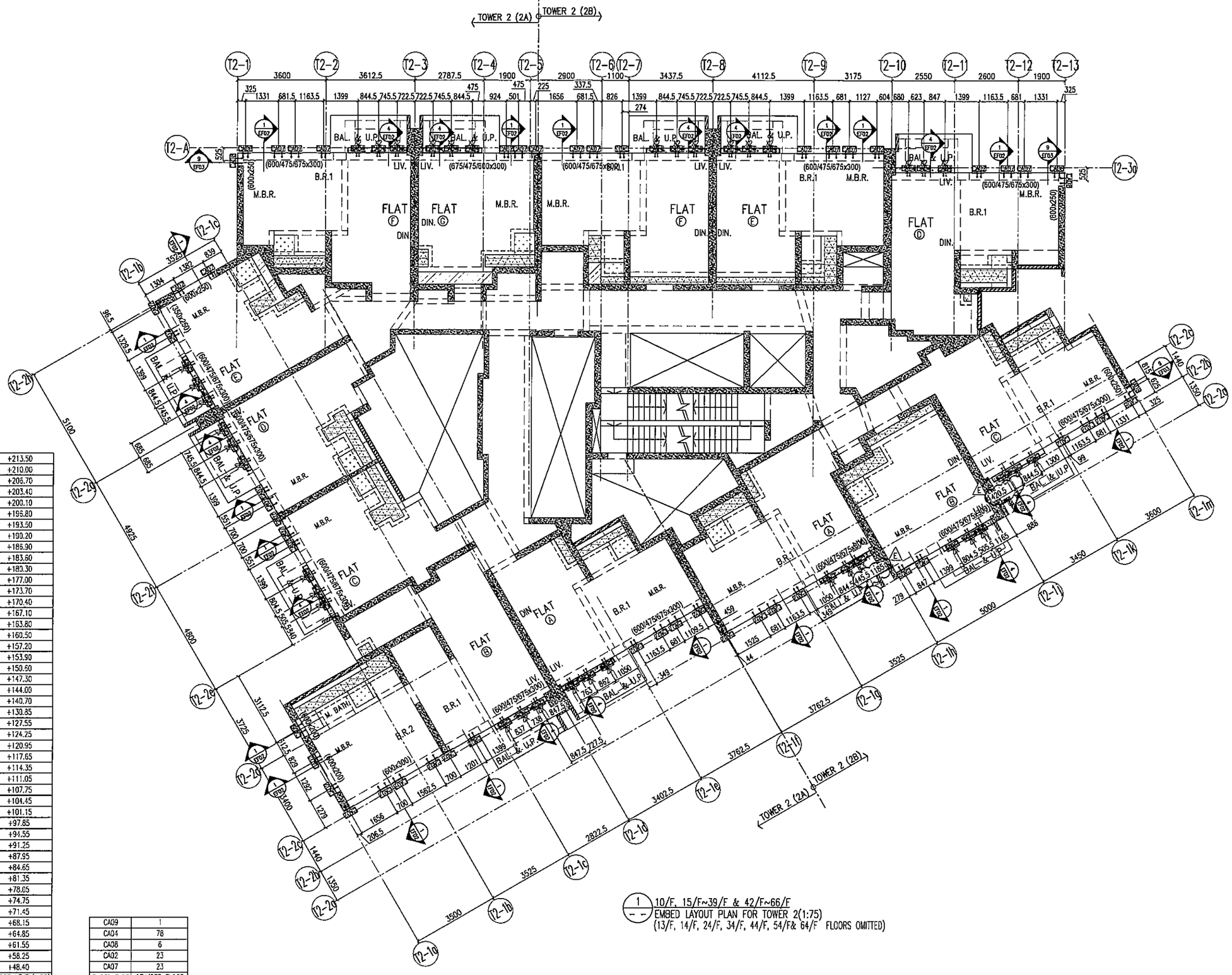

67/F	+213.50
66/F	+210.00
65/F	+206.70
63/F	+203.40
62/F	+200.10
61/F	+196.80
60/F	+193.50
59/F	+190.20
58/F	+186.90
57/F	+183.60
56/F	+180.30
55/F	+177.00
53/F	+173.70
52/F	+170.40
51/F	+167.10
50/F	+163.80
49/F	+160.50
48/F	+157.20
47/F	+153.90
46/F	+150.60
45/F	+147.30
43/F	+144.00
42/F	+140.70
39/F	+130.85
38/F	+127.55
37/F	+124.25
36/F	+120.95
35/F	+117.65
33/F	+114.35
32/F	+111.05
31/F	+107.75
30/F	+104.45
29/F	+101.15
28/F	+97.85
27/F	+94.55
26/F	+91.25
25/F	+87.95
23/F	+84.65
22/F	+81.35
21/F	+78.05
20/F	+74.75
19/F	+71.45
18/F	+68.15
17/F	+64.85
16/F	+61.55
15/F	+58.25
10/F	+48.40
FLOOR	FLOOR LEVEL(mPD)

CA09	1
CA04	78
CA08	6
CA02	23
CA07	23
EMBED TYPE	QTY/PER FLOOR

1 — 10/F, 15/F~39/F & 42/F~66/F
EMBED LAYOUT PLAN FOR TOWER 2(1:75)
(13/F, 14/F, 24/F, 34/F, 44/F, 54/F& 64/F FLOORS OMITTED)

B.D. REF :

CLIENT :
信和置業有限公司
Sino Land Company Limited

ARCHITECT :
ronald lu & partners
Architects . Planners . Interior Designers
Ronald Lu & Partners (HK) Ltd.
呂元祥建築師事務所(香港)有限公司

MAIN CONTRACTOR :
Gammon

STRUCTURAL ENGINEER :
AECOM

FACADE CONSULTANT:
AECOM

NOTE :
1. ALL DIMENSIONS ARE IN mm.
2. ALL ELEVATIONS ARE VIEWED FROM OUTSIDE.
3. ALL DIMENSIONS TO BE VERIFIED ON SITE BEFORE FABRICATION.

LEGEND :
- X1 / X001 — DETAIL MARK NO. / REFER SHEET NO.
1. F.F.L. --FINISHED FLOOR LEVEL
2. S.F.L. --STRUCTURAL FLOOR LEVEL
3. (/R) --REVERSED DETAIL

NO.	DATE	REVISED	BY
E	06/04/22	REVISED AS PER COMMENTS	LS
D	06/04/22	REVISED AS PER COMMENTS	LS
C	16/02/22	REVISED AS PER COMMENTS	LS
B	20/12/21	REVISED AS PER COMMENTS	LS
A	03/12/21	REVISED AS PER COMMENTS	LS

JOB NO. : J-858

PROJECT :
PROPOSED RESIDENTIAL DEVELOPMENT
AT TKOTL 70RP, PHASE 11, LOHAS PARK
TSEUNG KWAN O, N.T.

TITLE :
TYPICAL FLOOR PLAN
AT TOWER 2

DATE : 22-OCT-21 | SCALE : 1:75(A1)

DRAWN BY : KY | CHECKED BY : YB

美特鋁質有限公司
MIDI ALUMINIUM FABRICATOR LTD.
Units 6-8, Sunray Industrial Centre, 1/F
610 Cha Kwo Ling Road, Kowloon
Tel:23489211-4 Fax:(852)27727666

DWG NO. : J858-CW-EP201 | REV. : E

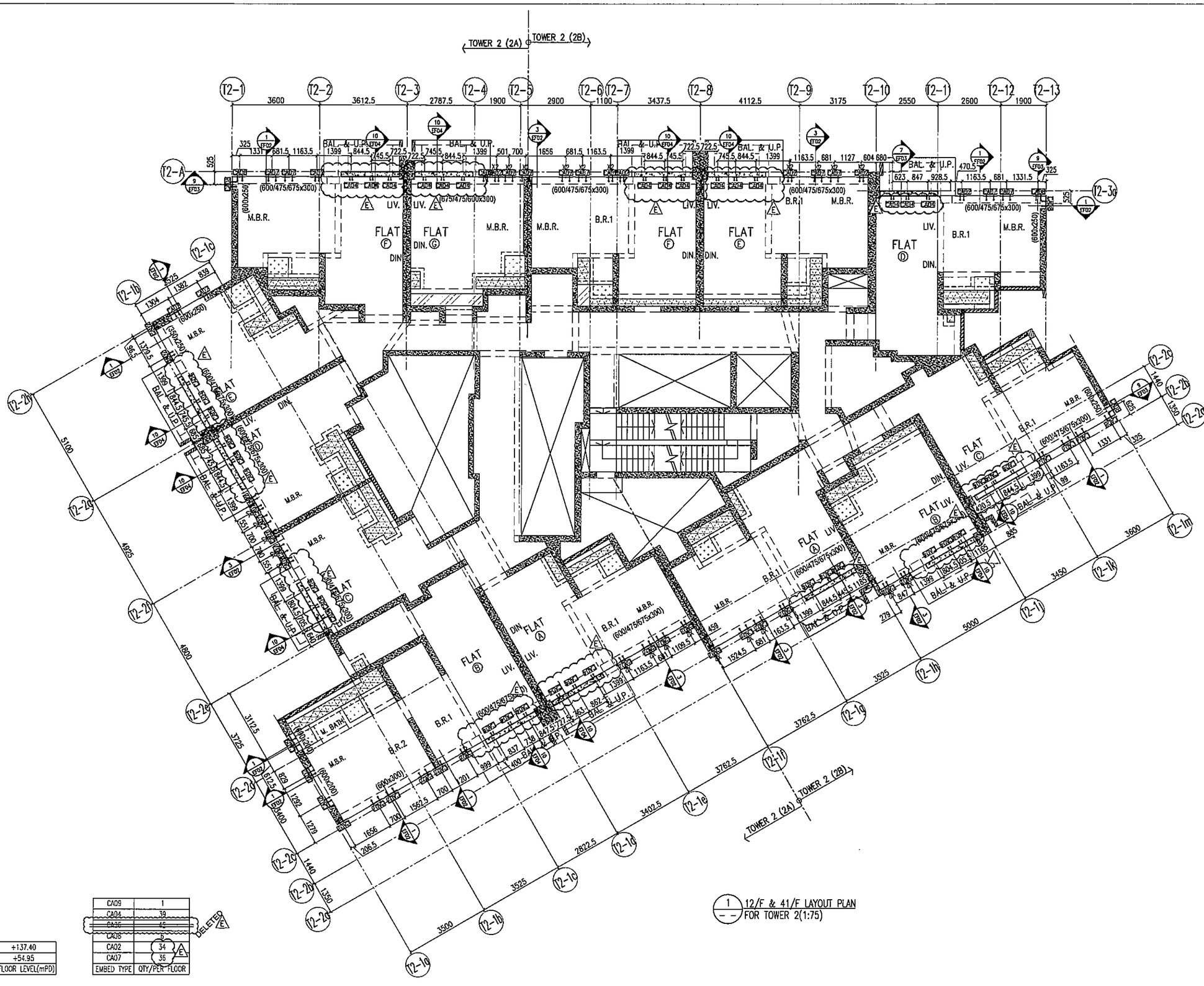

41/F	+137.40
12/F	+54.95
FLOOR	FLOOR LEVEL(mPD)

CA09	1
CA04	39
CA35	1
CA08	9
CA02	34
CA07	35
EMBED TYPE	QTY/PER FLOOR

DELETED

1 12/F & 41/F LAYOUT PLAN FOR TOWER 2(1:75)

B.D. REF :

CLIENT :
信和置業有限公司
Sino Land Company Limited

ARCHITECT :
ronald lu & partners
Architects | Planners | Interior Designers
Ronald Lu & Partners (HK) Ltd.
呂元祥建築師事務所(香港)有限公司

MAIN CONTRACTOR :
Gammon

STRUCTURAL ENGINEER :
AECOM

FACADE CONSULTANT:
AECOM

NOTE :
1. ALL DIMENSIONS ARE IN mm.
2. ALL ELEVATIONS ARE VIEWED FROM OUTSIDE.
3. ALL DIMENSIONS TO BE VERIFIED ON SITE BEFORE FABRICATION.

LEGEND :
- K1 / K001 — DETAIL MARK NO. / REFER SHEET NO.
1. F.F.L. --- FINISHED FLOOR LEVEL
2. S.F.L. --- STRUCTURAL FLOOR LEVEL
3. /R -- REVERSED DETAIL

NO.	DATE	REVISED	BY
E	26/05/22	REVISED AS PER COMMENTS	LS
D	06/04/22	REVISED AS PER COMMENTS	LS
C	16/02/22	REVISED AS PER COMMENTS	LS
B	20/12/21	REVISED AS PER COMMENTS	LS
A	03/12/21	REVISED AS PER COMMENTS	LS

JOB NO. : J-858

PROJECT :
PROPOSED RESIDENTIAL DEVELOPMENT
AT TKOTL 70RP, PHASE 11, LOHAS PARK
TSEUNG KWAN O, N.T.

TITLE :
12/F & 41/F REFUGE FLOOR PLAN
AT TOWER 2

DATE : 22-OCT-21 | SCALE : 1:75(A1)

DRAWN BY : KY | CHECKED BY : YB

美特鋁質有限公司
MIDI ALUMINIUM FABRICATOR LTD.
Units 6-8, Sunray Industrial Centre, 1/F
610 Cha Kwo Ling Road, Kowloon
Tel:23489211-4 Fax:(852)27727666

DWG NO. : J858-CW-EP202 | REV. : E

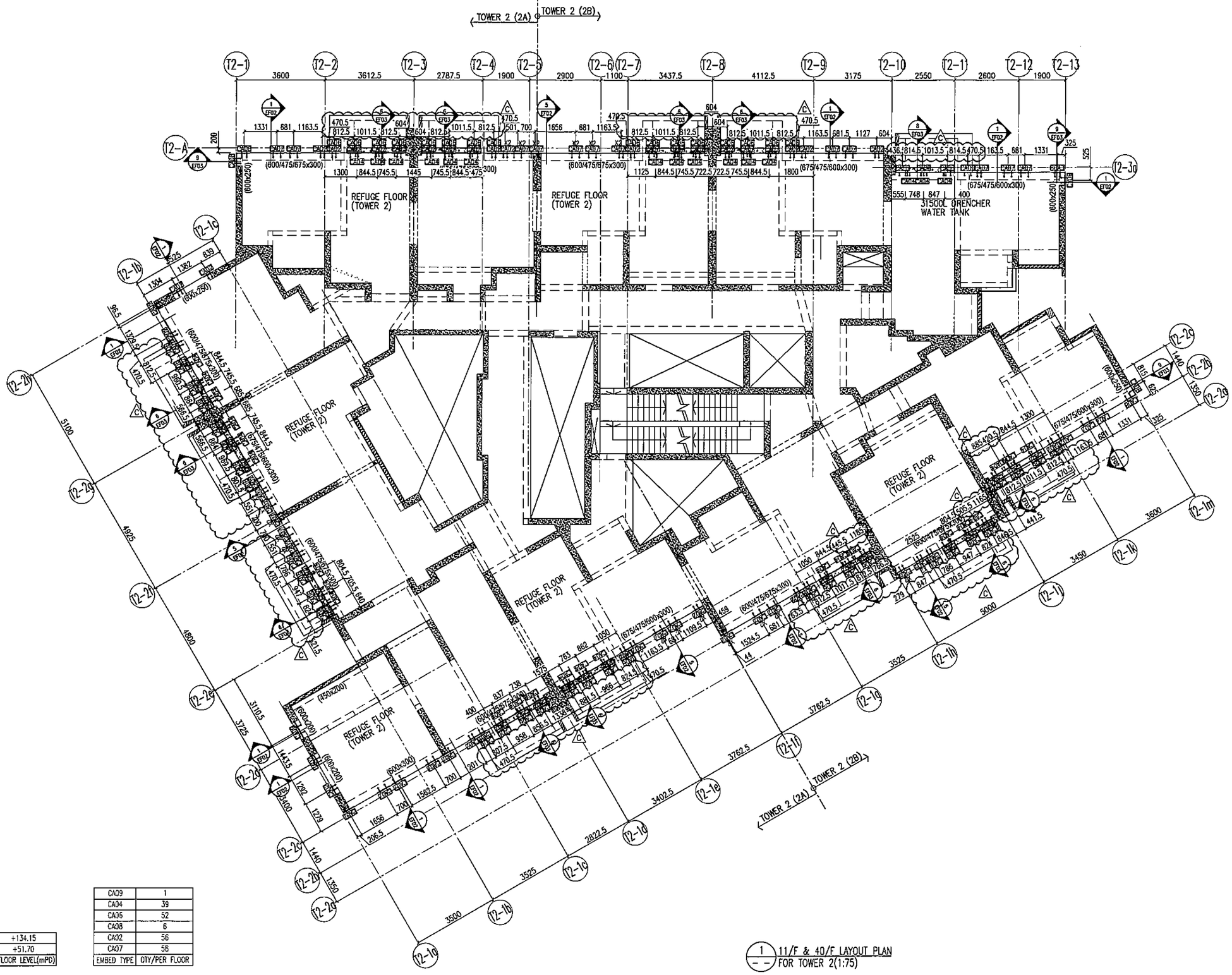

40/F	+134.15
11/F	+51.70
FLOOR	FLOOR LEVEL(mPD)

CA09	1
CA04	39
CA05	52
CA08	6
CA02	56
CA07	56
EMBED TYPE	QTY/PER FLOOR

1 / -- 11/F & 40/F LAYOUT PLAN FOR TOWER 2(1:75)

B.D. REF :

CLIENT :
信和置業有限公司
Sino Land Company Limited

ARCHITECT :
ronald lu & partners
Architects | Planners | Interior Designers
Ronald Lu & Partners (HK) Ltd.
呂元祥建築師事務所(香港)有限公司

MAIN CONTRACTOR :
Gammon

STRUCTURAL ENGINEER :
AECOM

FACADE CONSULTANT:
AECOM

NOTE :
1. ALL DIMENSIONS ARE IN mm.
2. ALL ELEVATIONS ARE VIEWED FROM OUTSIDE.
3. ALL DIMENSIONS TO BE VERIFIED ON SITE BEFORE FABRICATION.

LEGEND :
X1 / XXX1 — DETAIL MARK NO. / REFER SHEET NO.
1. F.F.L. --FINISHED FLOOR LEVEL
2. S.F.L. --STRUCTURAL FLOOR LEVEL
3. /R --REVERSED DETAIL

NO.	DATE	REVISED	BY
C	26/05/22	REVISED AS PER COMMENTS	LS
B	06/04/22	REVISED AS PER COMMENTS	LS
A	16/02/22	REVISED AS PER COMMENTS	LS

JOB NO. : J-858

PROJECT :
PROPOSED RESIDENTIAL DEVELOPMENT
AT TKOTL 70RP, PHASE 11, LOHAS PARK
TSEUNG KWAN O, N.T.

TITLE :
11/F & 40/F REFUGE FLOOR PLAN
AT TOWER 2

DATE : 22-OCT-21 | SCALE : 1:75(A1)

DRAWN BY : KY | CHECKED BY : YB

美特鋁質有限公司
MIDI ALUMINIUM FABRICATOR LTD.
Units 6-8, Sunray Industrial Centre, 1/F
610 Cha Kwo Ling Road, Kowloon
Tel:23489211-4 Fax:(852)27727666

DWG NO. : J858-CW-EP203 | REV. : C

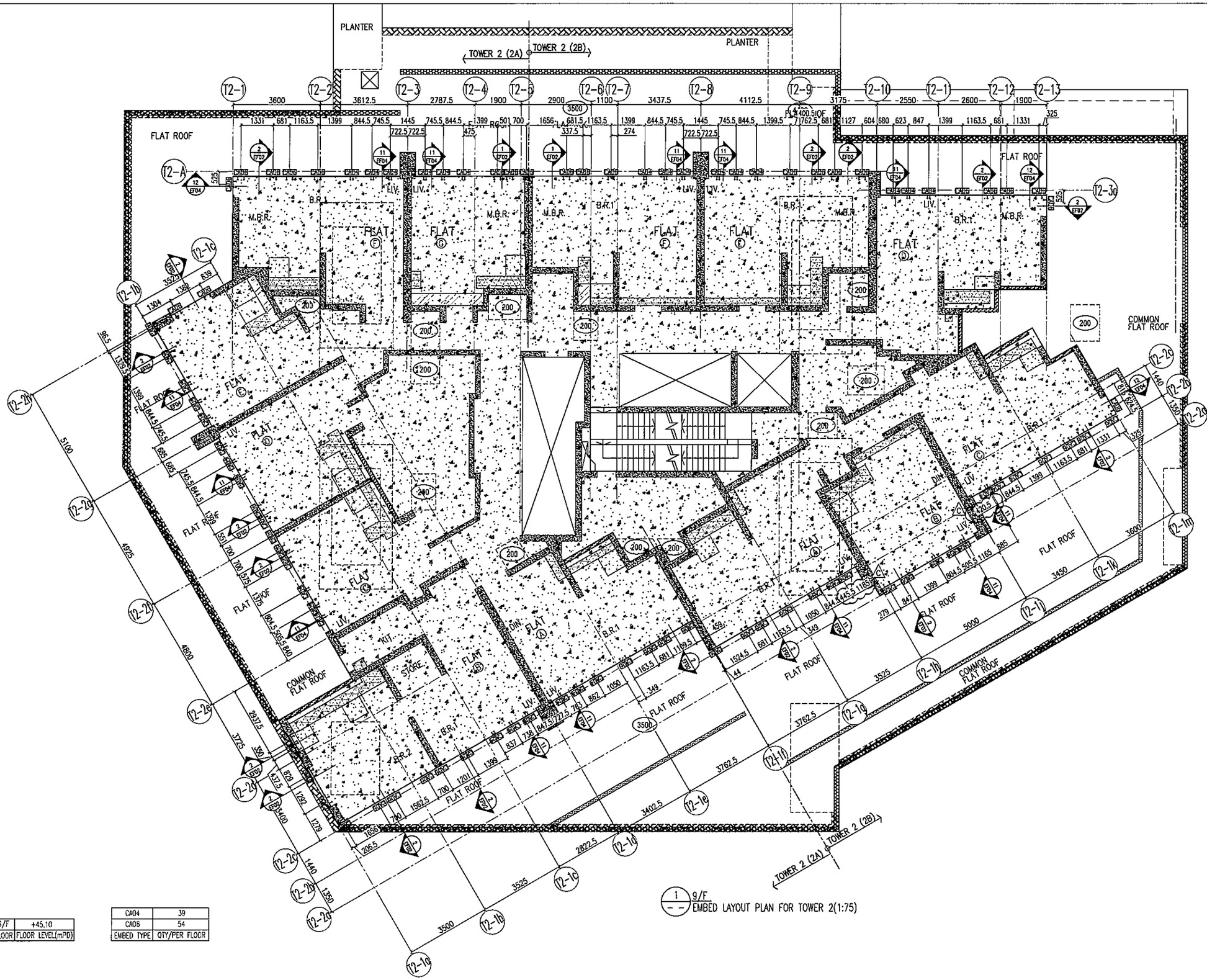

1 9/F
EMBED LAYOUT PLAN FOR TOWER 2(1:75)

9/F	+45.10
FLOOR	FLOOR LEVEL(mPD)

CA04	39
CA05	54
EMBED TYPE	QTY/PER FLOOR

B.D. REF :

CLIENT :
信和置業有限公司
Sino Land Company Limited

ARCHITECT :
ronald lu & partners
Architects . Planners . Interior Designers
Ronald Lu & Partners (HK) Ltd.
呂元祥建築師事務所(香港)有限公司

MAIN CONTRACTOR :
Gammon

STRUCTURAL ENGINEER :
AECOM

FACADE CONSULTANT:
AECOM

NOTE :
1. ALL DIMENSIONS ARE IN mm.
2. ALL ELEVATIONS ARE VIEWED FROM OUTSIDE.
3. ALL DIMENSIONS TO BE VERIFIED ON SITE BEFORE FABRICATION.

LEGEND :
- X1 / X001 — DETAIL MARK NO. / REFER SHEET NO.
1. F.F.L. --FINISHED FLOOR LEVEL
2. S.F.L. --STRUCTURAL FLOOR LEVEL
3. (R) --REVERSED DETAIL

NO.	DATE	REVISED	BY
C	26/05/22	REVISED AS PER COMMENTS	LS
B	06/04/22	REVISED AS PER COMMENTS	LS
A	16/02/22	REVISED AS PER COMMENTS	LS

JOB NO. : J-858

PROJECT :
PROPOSED RESIDENTIAL DEVELOPMENT
AT TKOTL 70RP, PHASE 11, LOHAS PARK
TSEUNG KWAN O, N.T.

TITLE :
TYPICAL FLOOR PLAN
AT TOWER 2

DATE : 22-OCT-21 | SCALE : 1:75(A1)

DRAWN BY : KY | CHECKED BY : YB

美特鋁質有限公司
MIDI ALUMINUM FABRICATOR LTD.
Units 6-8, Sunray Industrial Centre, 1/F
610 Cha Kwo Ling Road, Kowloon
Tel:23489211-4 Fax:(852)27727666

DWG NO. : J858-CW-EP204 | REV. : C

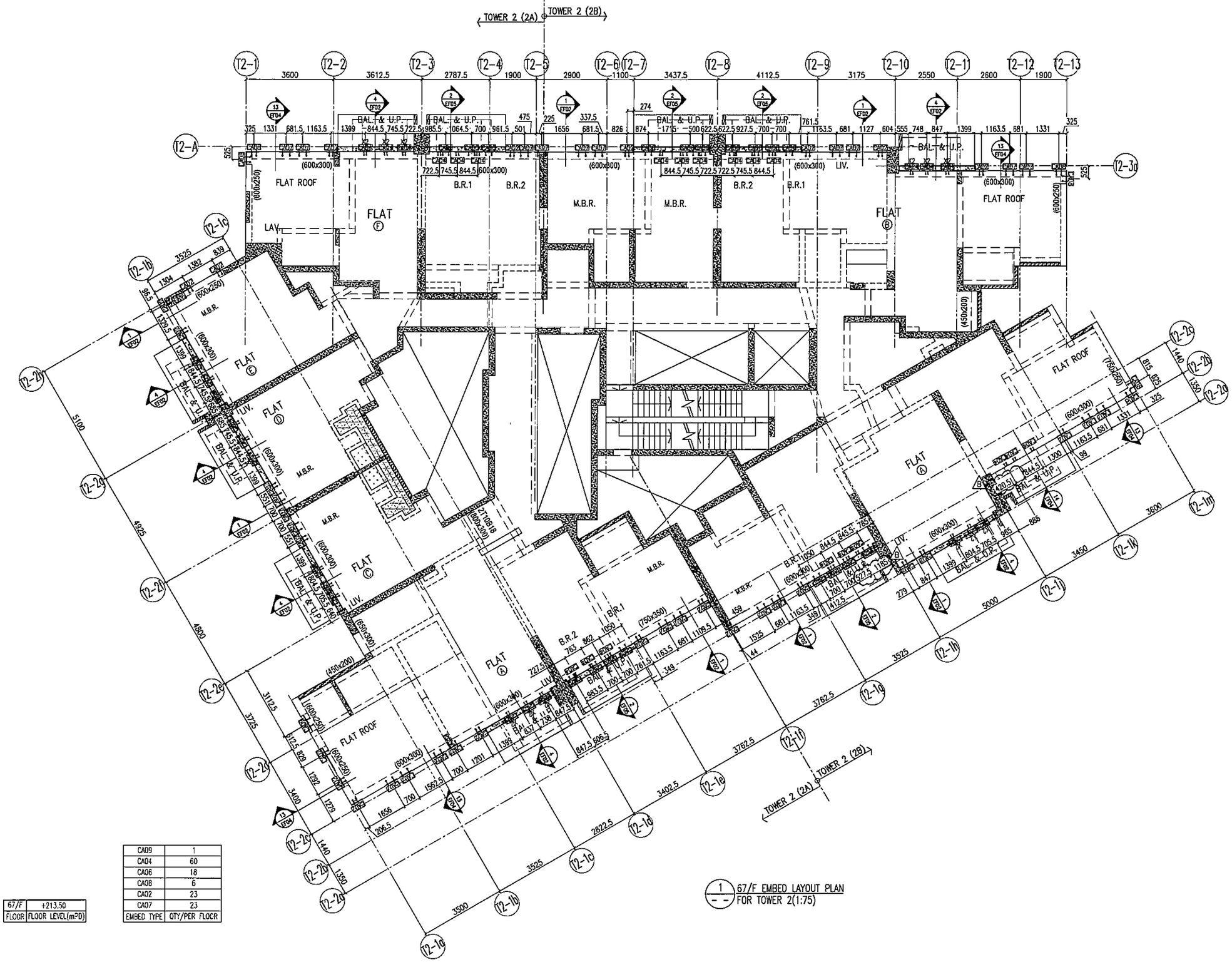

67/F	+213.50
FLOOR	FLOOR LEVEL(mPD)

CA09	1
CA04	60
CA06	18
CA08	6
CA02	23
CA07	23
EMBED TYPE	QTY/PER FLOOR

1 / -- 67/F EMBED LAYOUT PLAN FOR TOWER 2(1:75)

B.D. REF :

CLIENT :
信和置業有限公司
Sino Land Company Limited

ARCHITECT :
ronald lu & partners
Architects . Planners . Interior Designers
Ronald Lu & Partners (HK) Ltd.
呂元祥建築師事務所(香港)有限公司

MAIN CONTRACTOR :
Gammon

STRUCTURAL ENGINEER :
AECOM

FACADE CONSULTANT:
AECOM

NOTE :
1. ALL DIMENSIONS ARE IN mm.
2. ALL ELEVATIONS ARE VIEWED FROM OUTSIDE.
3. ALL DIMENSIONS TO BE VERIFIED ON SITE BEFORE FABRICATION.

LEGEND :
X1 / X001 — DETAIL MARK NO. / REFER SHEET NO.
1. F.F.L. --FINISHED FLOOR LEVEL
2. S.F.L. --STRUCTURAL FLOOR LEVEL
3. /R --REVERSED DETAIL

NO.	DATE	REVISED	BY
B	26/05/22	REVISED AS PER COMMENTS	LS
A	16/04/22	REVISED AS PER COMMENTS	LS

JOB NO. : J-858

PROJECT :
PROPOSED RESIDENTIAL DEVELOPMENT
AT TKOTL 70RP, PHASE 11, LOHAS PARK
TSEUNG KWAN O, N.T.

TITLE :
67/F EMBED LAYOUT PLAN
AT TOWER 2

DATE : 22-OCT-21 | SCALE : 1:75(A1)

DRAWN BY : KY | CHECKED BY : YB

美特鋁質有限公司
MIDI ALUMINIUM FABRICATOR LTD.
Units 6-8, Sunray Industrial Centre, 1/F
610 Cha Kwo Ling Road, Kowloon
Tel:23489211-4 Fax:(852)27727666

DWG NO. : J858-CW-EP205 | REV. : B

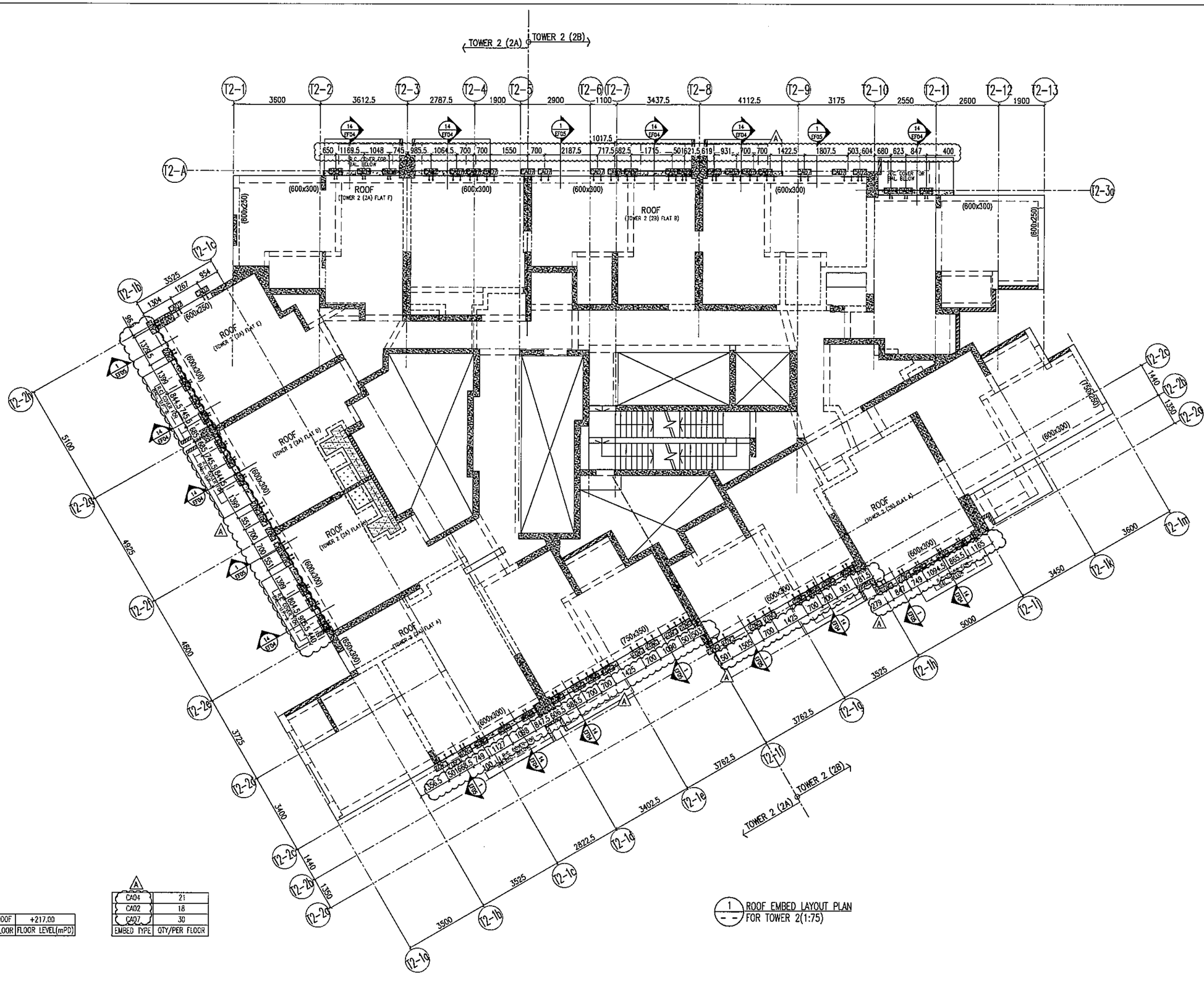

ROOF	+217.00
FLOOR	FLOOR LEVEL(mPD)

A	
CA04	21
CA02	18
CA07	30
EMBED TYPE	QTY/PER FLOOR

B.D. REF :

CLIENT :
信和置業有限公司
Sino Land Company Limited

ARCHITECT :
ronald lu & partners
Architects . Planners . Interior Designers
Ronald Lu & Partners (HK) Ltd.
呂元祥建築師事務所(香港)有限公司

MAIN CONTRACTOR :
Gammon

STRUCTURAL ENGINEER :
AECOM

FACADE CONSULTANT:
AECOM

NOTE :
1. ALL DIMENSIONS ARE IN mm.
2. ALL ELEVATIONS ARE VIEWED FROM OUTSIDE.
3. ALL DIMENSIONS TO BE VERIFIED ON SITE BEFORE FABRICATION.

LEGEND :
- X1 / X001 — DETAIL MARK NO. / REFER SHEET NO.
1. F.F.L. --FINISHED FLOOR LEVEL
2. S.F.L --STRUCTURAL FLOOR LEVEL
3. (/R) --REVERSED DETAIL

NO.	DATE	REVISED	BY
A	16/04/22	REVISED AS PER COMMENTS	LS

JOB NO. : J-858

PROJECT :
PROPOSED RESIDENTIAL DEVELOPMENT
AT TKOTL 70RP, PHASE 11, LOHAS PARK
TSEUNG KWAN O, N.T.

TITLE :
ROOF EMBED LAYOUT PLAN
AT TOWER 2

DATE : 22-OCT-21 | SCALE : 1:75(A1)

DRAWN BY : KY | CHECKED BY : YB

美特鋁質有限公司
MIDI ALUMINUM FABRICATOR LTD.
Units 6-8, Sunray Industrial Centre, 1/F
610 Cha Kwo Ling Road, Kowloon
Tel:23489211-4 Fax:(852)27727666

DWG NO. : J858-CW-EP206 | REV. : A

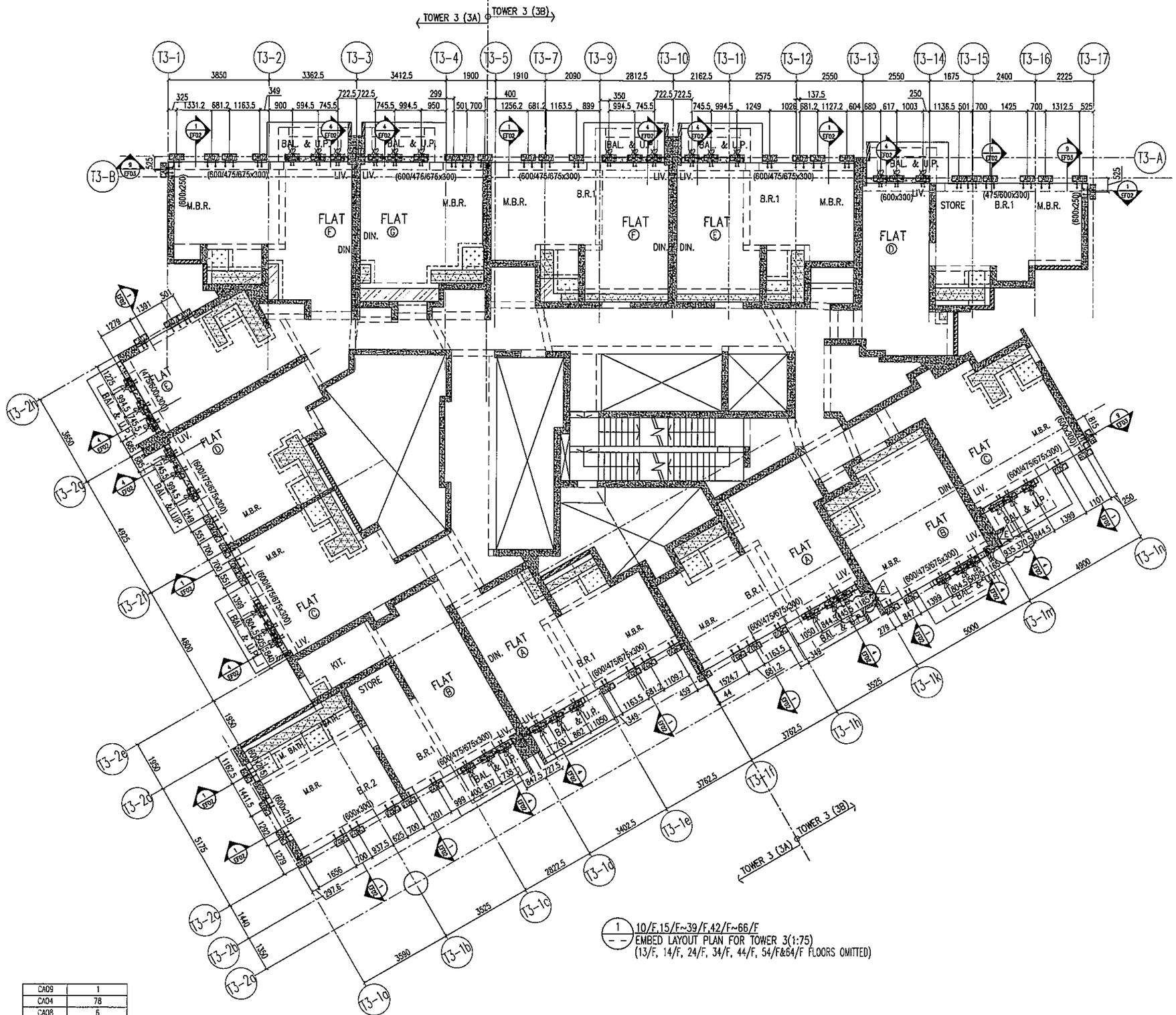

1 / 10/F,15/F~39/F,42/F~66/F
EMBED LAYOUT PLAN FOR TOWER 3(1:75)
(13/F, 14/F, 24/F, 34/F, 44/F, 54/F&64/F FLOORS OMITTED)

66/F	+210.00
65/F	+206.70
63/F	+203.40
62/F	+200.10
61/F	+196.80
60/F	+193.50
59/F	+190.20
58/F	+186.90
57/F	+183.60
56/F	+180.30
55/F	+177.00
53/F	+173.70
52/F	+170.40
51/F	+167.10
50/F	+163.80
49/F	+160.50
48/F	+157.20
47/F	+153.90
46/F	+150.60
45/F	+147.30
43/F	+144.00
42/F	+140.70
39/F	+130.85
38/F	+127.55
37/F	+124.25
36/F	+120.95
35/F	+117.65
33/F	+114.35
32/F	+111.05
31/F	+107.75
30/F	+104.45
29/F	+101.15
28/F	+97.85
27/F	+94.55
26/F	+91.25
25/F	+87.95
23/F	+84.65
22/F	+81.35
21/F	+78.05
20/F	+74.75
19/F	+71.45
18/F	+68.15
17/F	+64.85
16/F	+61.55
15/F	+58.25
10/F	+48.40
FLOOR	FLOOR LEVEL(mPD)

CA09	1
CA04	78
CA08	6
CA02	21
CA07	24
EMBED TYPE	QTY/PER FLOOR

B.D. REF :

CLIENT :
信和置業有限公司
Sino Land Company Limited

ARCHITECT :
ronald lu & partners
Architects . Planners . Interior Designers
Ronald Lu & Partners (HK) Ltd.
呂元祥建築師事務所(香港)有限公司

MAIN CONTRACTOR :
Gammon

STRUCTURAL ENGINEER :
AECOM

FACADE CONSULTANT:
AECOM

NOTE :
1. ALL DIMENSIONS ARE IN mm.
2. ALL ELEVATIONS ARE VIEWED FROM OUTSIDE.
3. ALL DIMENSIONS TO BE VERIFIED ON SITE BEFORE FABRICATION.

LEGEND :
X1 / X001 — DETAIL MARK NO. / REFER SHEET NO.
1. F.F.L. --FINISHED FLOOR LEVEL
2. S.F.L. --STRUCTURAL FLOOR LEVEL
3. /R — REVERSED DETAIL

NO.	DATE	REVISED	BY
E	26/05/22	REVISED AS PER COMMENTS	LS
D	06/04/22	REVISED AS PER COMMENTS	LS
C	16/02/22	REVISED AS PER COMMENTS	LS
B	20/12/21	REVISED AS PER COMMENTS	LS
A	03/12/21	REVISED AS PER COMMENTS	LS

JOB NO. : J-858

PROJECT :
PROPOSED RESIDENTIAL DEVELOPMENT
AT TKOTL 70RP, PHASE 11, LOHAS PARK
TSEUNG KWAN O, N.T.

TITLE :
TYPICAL FLOOR EMBED LAYOUT PLAN
AT TOWER 3

DATE : 22-OCT-21 | SCALE : 1:75(A1)

DRAWN BY : KY | CHECKED BY : YB

美特鋁質有限公司
MIDI ALUMINUM FABRICATOR LTD.
Units 6-8, Sunray Industrial Centre, 1/F
610 Cha Kwo Ling Road, Kowloon
Tel:23489211-4 Fax:(852)27727666

DWG NO. : J858-CW-EP301 | REV. : E

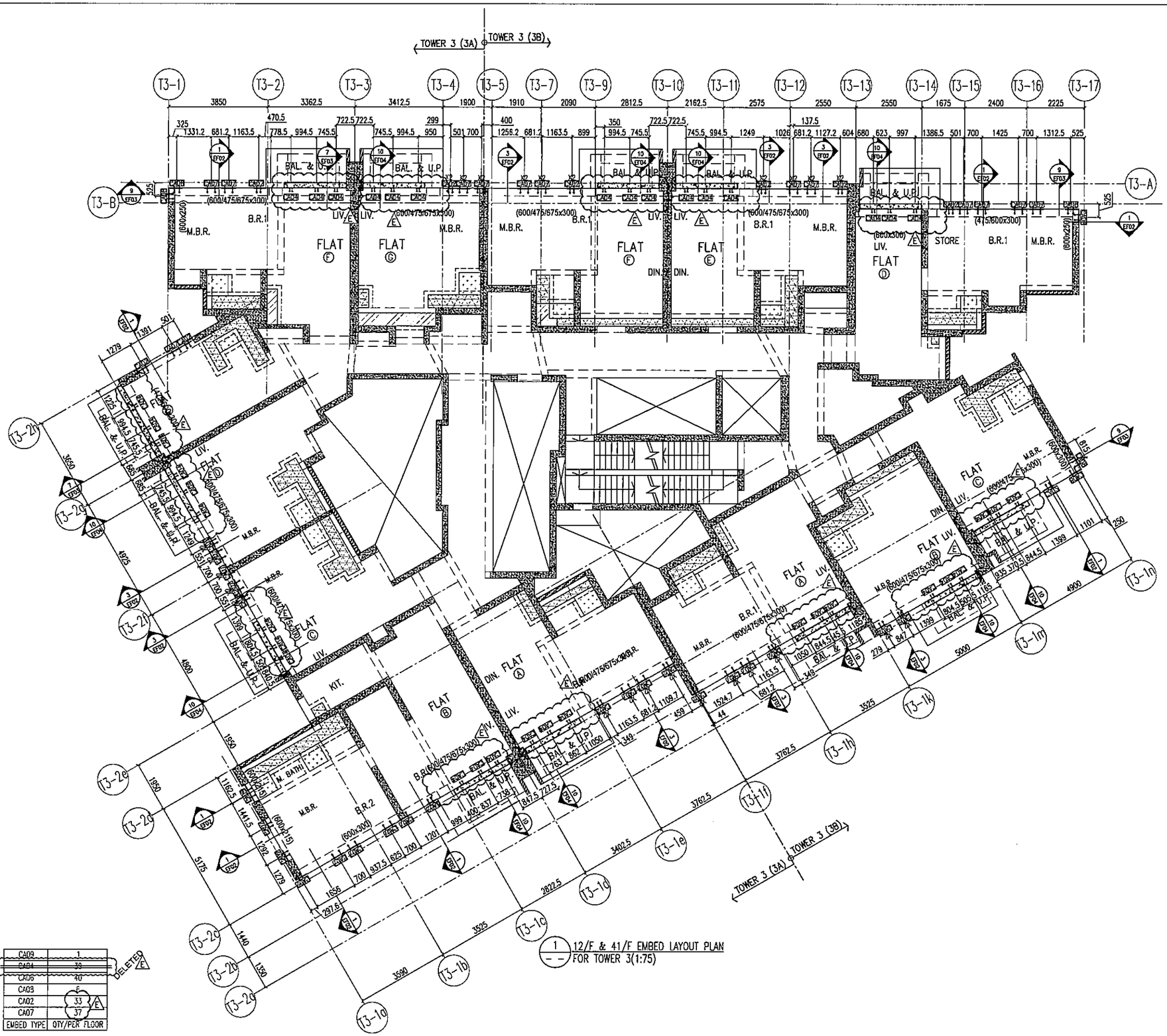

1 12/F & 41/F EMBED LAYOUT PLAN FOR TOWER 3(1:75)

41/F	+137.40
12/F	+54.95
FLOOR	FLOOR LEVEL(mPD)

EMBED TYPE	QTY/PER FLOOR
CA09	1
CA04	39
CA06	40
CA03	6
CA02	33
CA07	37

DELETED E

B.D. REF :

CLIENT :
信和置業有限公司
Sino Land Company Limited

ARCHITECT :
ronald lu & partners
Architects . Planners . Interior Designers
Ronald Lu & Partners (HK) Ltd.
呂元祥建築師事務所(香港)有限公司

MAIN CONTRACTOR :
Gammon

STRUCTURAL ENGINEER :
AECOM

FACADE CONSULTANT:
AECOM

NOTE :
1. ALL DIMENSIONS ARE IN mm.
2. ALL ELEVATIONS ARE VIEWED FROM OUTSIDE.
3. ALL DIMENSIONS TO BE VERIFIED ON SITE BEFORE FABRICATION.

LEGEND :
X1 — DETAIL MARK NO.
X001 — REFER SHEET NO.
1. F.F.L. --FINISHED FLOOR LEVEL
2. S.F.L. --STRUCTURAL FLOOR LEVEL
3. (R) --REVERSED DETAIL

NO.	DATE	REVISED	BY
E	26/05/22	REVISED AS PER COMMENTS	LS
D	06/04/22	REVISED AS PER COMMENTS	LS
C	16/02/22	REVISED AS PER COMMENTS	LS
B	20/12/21	REVISED AS PER COMMENTS	LS
A	03/12/21	REVISED AS PER COMMENTS	LS

JOB NO. : J-858

PROJECT :
PROPOSED RESIDENTIAL DEVELOPMENT
AT TKOTL 70RP, PHASE 11, LOHAS PARK
TSEUNG KWAN O, N.T.

TITLE :
12/F & 41/F EMBED LAYOUT PLAN
AT TOWER 3

DATE : 22-OCT-21 | SCALE : 1:75(A1)

DRAWN BY : KY | CHECKED BY : YB

美特鋁質有限公司
MIDI ALUMINUM FABRICATOR LTD.
Units 6-8, Sunray Industrial Centre, 1/F
610 Cha Kwo Ling Road, Kowloon
Tel:23489211-4 Fax:(852)27727666

DWG NO. : J858-CW-EP302 | REV. : E

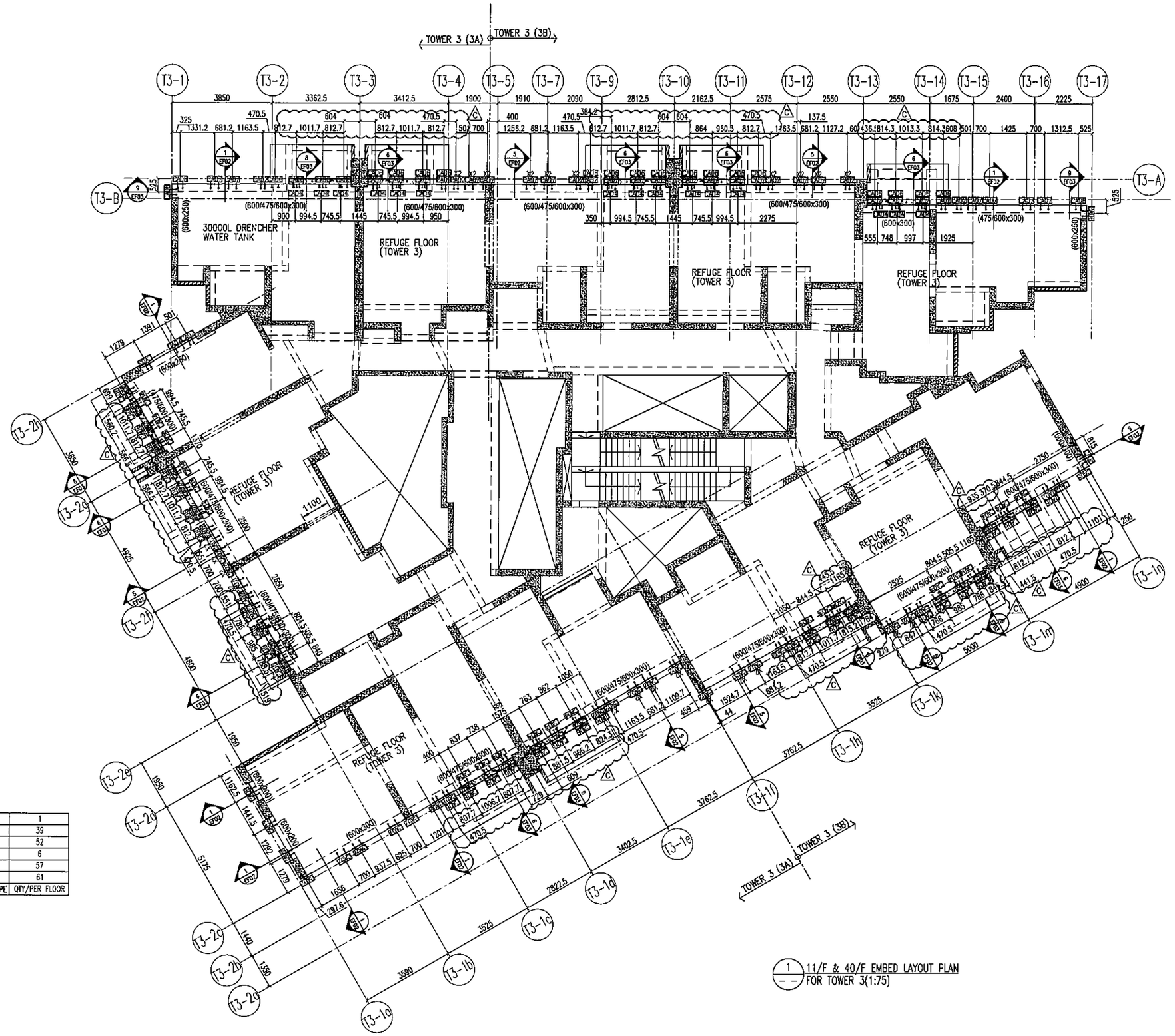

40/F	+134.15
11/F	+51.7
FLOOR	FLOOR LEVEL(mPD)

CA09	1
CA04	39
CA06	52
CA08	6
CA02	57
CA07	61
EMBED TYPE	QTY/PER FLOOR

1 / - - 11/F & 40/F EMBED LAYOUT PLAN FOR TOWER 3(1:75)

B.D. REF :

CLIENT :
信和置業有限公司
Sino Land Company Limited

ARCHITECT :
ronald lu & partners
Architects . Planners . Interior Designers
Ronald Lu & Partners (HK) Ltd.
呂元祥建築師事務所(香港)有限公司

MAIN CONTRACTOR :
Gammon

STRUCTURAL ENGINEER :
AECOM

FACADE CONSULTANT:
AECOM

NOTE :
1. ALL DIMENSIONS ARE IN mm.
2. ALL ELEVATIONS ARE VIEWED FROM OUTSIDE.
3. ALL DIMENSIONS TO BE VERIFIED ON SITE BEFORE FABRICATION.

LEGEND :
X1 / XDD1 — DETAIL MARK NO. / REFER SHEET NO.
1. F.F.L. --FINISHED FLOOR LEVEL
2. S.F.L. --STRUCTURAL FLOOR LEVEL
3. (/R) --REVERSED DETAIL

NO.	DATE	REVISED	BY
C	26/05/22	REVISED AS PER COMMENTS	LS
B	06/04/22	REVISED AS PER COMMENTS	LS
A	16/02/22	REVISED AS PER COMMENTS	LS

JOB NO. : J-858

PROJECT :
PROPOSED RESIDENTIAL DEVELOPMENT
AT TKOTL 70RP, PHASE 11, LOHAS PARK
TSEUNG KWAN O, N.T.

TITLE :
11/F & 40/F EMBED LAYOUT PLAN
AT TOWER 3

DATE : 22-OCT-21 | SCALE : 1:75(A1)

DRAWN BY : | CHECKED BY : YB

KY 美特鋁質有限公司
MIDI ALUMINIUM FABRICATOR LTD.
Units 6-8, Sunray Industrial Centre, 1/F
610 Cha Kwo Ling Road, Kowloon
Tel:23489211-4 Fax:(852)27727666

DWG NO. : J858-CW-EP303 | REV. : C

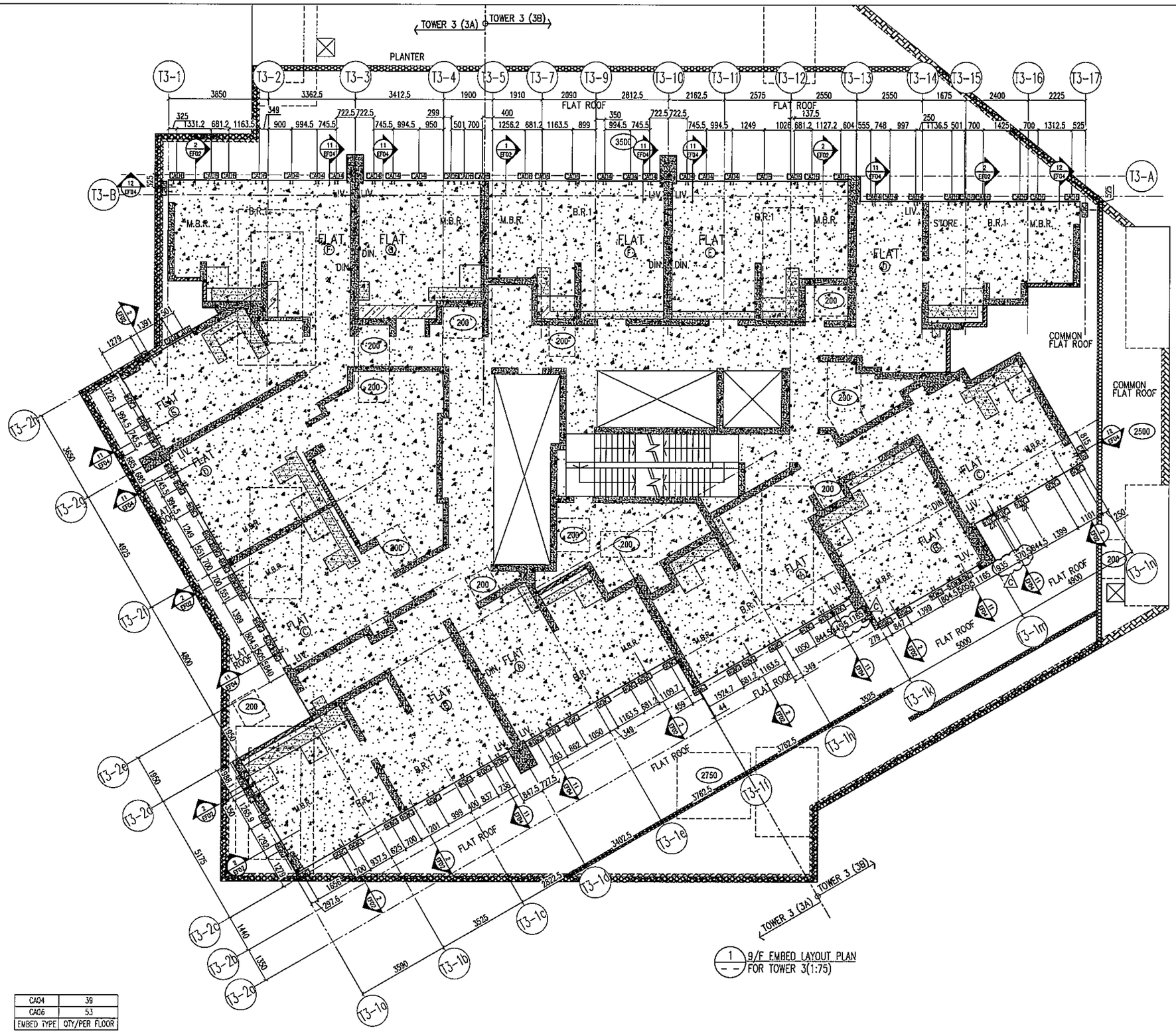

1 9/F EMBED LAYOUT PLAN FOR TOWER 3(1:75)

9/F	+45.10
FLOOR	FLOCR LEVEL(mPD)

CA04	39
CA06	53
EMBED TYPE	QTY/PER FLOOR

B.D. REF :

CLIENT :
信和置業有限公司
Sino Land Company Limited

ARCHITECT :
ronald lu & partners
Architects . Planners . Interior Designers
Ronald Lu & Partners (HK) Ltd.
呂元祥建築師事務所(香港)有限公司

MAIN CONTRACTOR :
Gammon

STRUCTURAL ENGINEER :
AECOM

FACADE CONSULTANT:
AECOM

NOTE :
1. ALL DIMENSIONS ARE IN mm.
2. ALL ELEVATIONS ARE VIEWED FROM OUTSIDE.
3. ALL DIMENSIONS TO BE VERIFIED ON SITE BEFORE FABRICATION.

LEGEND :
X1 — DETAIL MARK NO.
X001 — REFER SHEET NO.
1. F.F.L. --FINISHED FLOOR LEVEL
2. S.F.L. --STRUCTURAL FLOOR LEVEL
3. /R --REVERSED DETAIL

NO.	DATE	REVISED	BY
C	26/05/22	REVISED AS PER COMMENTS	LS
B	05/04/22	REVISED AS PER COMMENTS	LS
A	16/02/22	REVISED AS PER COMMENTS	LS

JOB NO. : J-858

PROJECT :
PROPOSED RESIDENTIAL DEVELOPMENT
AT TKOTL 70RP, PHASE 11, LOHAS PARK
TSEUNG KWAN O, N.T.

TITLE :
TYPICAL FLOOR EMBED LAYOUT PLAN
AT TOWER 3

DATE : 22-OCT-21	SCALE : 1:75(A1)
DRAWN BY : KY	CHECKED BY : YB

美特鋁質有限公司
MIDI ALUMINIUM FABRICATOR LTD.
Units 6-8, Sunray Industrial Centre, 1/F
610 Cha Kwo Ling Road, Kowloon
Tel:23489211-4 Fax:(852)27727655

DWG NO. : J858-CW-EP304 REV. : C

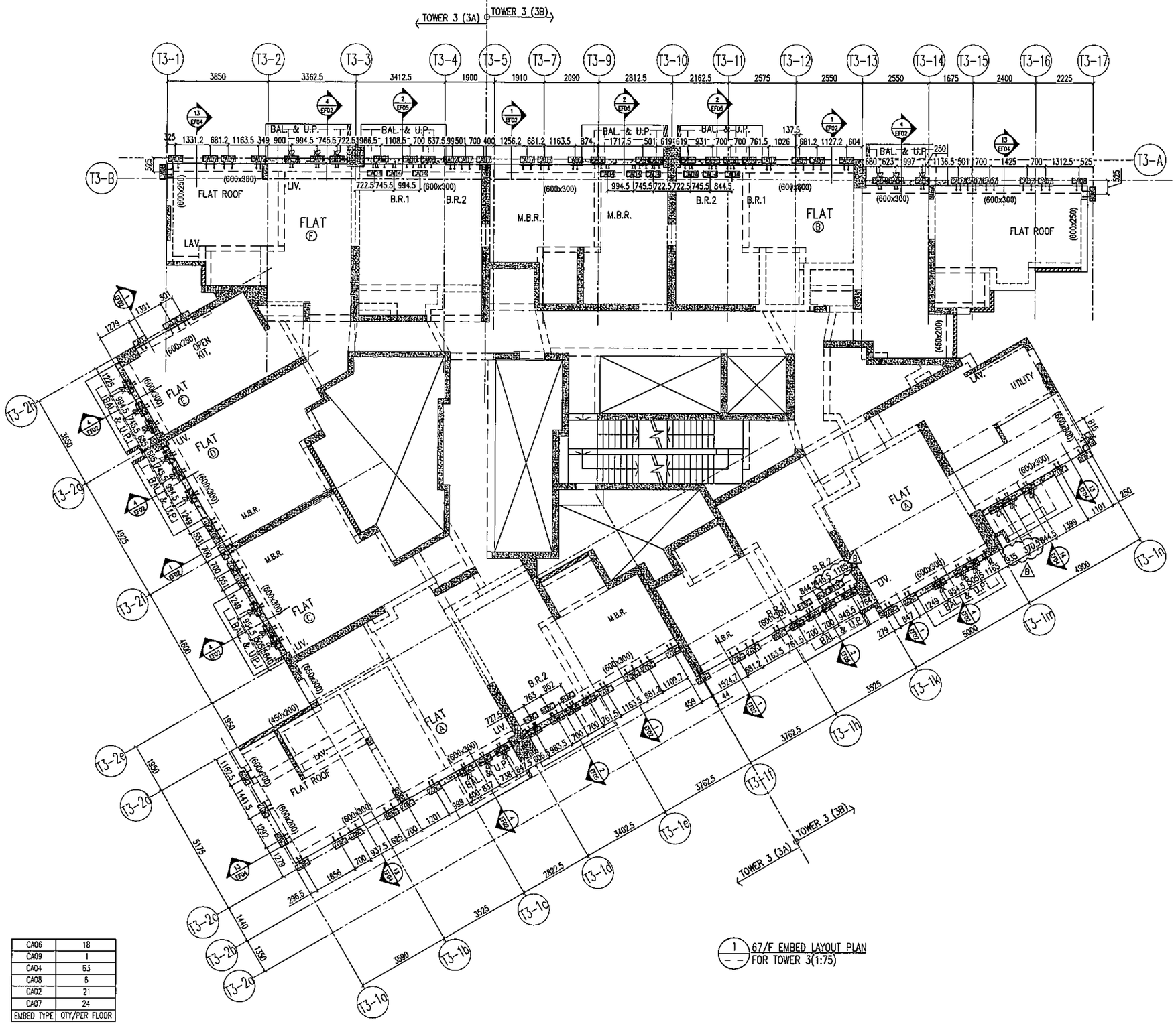

67/F	+213.50
FLOOR	FLOOR LEVEL(mPD)

CA06	18
CA09	1
CA04	63
CA08	6
CA02	21
CA07	24
EMBED TYPE	QTY/PER FLOOR

1 / -- 67/F EMBED LAYOUT PLAN FOR TOWER 3(1:75)

B.D. REF :

CLIENT :
信和置業有限公司
Sino Land Company Limited

ARCHITECT :
ronald lu & partners
Architects . Planners . Interior Designers
Ronald Lu & Partners (HK) Ltd.
呂元祥建築師事務所(香港)有限公司

MAIN CONTRACTOR :
Gammon

STRUCTURAL ENGINEER :
AECOM

FACADE CONSULTANT:
AECOM

NOTE :
1. ALL DIMENSIONS ARE IN mm.
2. ALL ELEVATIONS ARE VIEWED FROM OUTSIDE.
3. ALL DIMENSIONS TO BE VERIFIED ON SITE BEFORE FABRICATION.

LEGEND :
X1 — DETAIL MARK NO.
X001 — REFER SHEET NO.

1. F.F.L. --FINISHED FLOOR LEVEL
2. S.F.L. --STRUCTURAL FLOOR LEVEL
3. (/R) --REVERSED DETAIL

NO.	DATE	REVISED	BY
B	26/05/22	REVISED AS PER COMMENTS	LS
A	06/04/22	REVISED AS PER COMMENTS	LS

JOB NO. : J-858

PROJECT :
PROPOSED RESIDENTIAL DEVELOPMENT
AT TKOTL 70RP, PHASE 11, LOHAS PARK
TSEUNG KWAN O, N.T.

TITLE :
67/F EMBED LAYOUT PLAN
AT TOWER 3

DATE : 22-OCT-21 | SCALE : 1:75(A1)

DRAWN BY : KY | CHECKED BY : YB

美特鋁質有限公司
MIDI ALUMINIUM FABRICATOR LTD.
Units 6-8, Sunray Industrial Centre, 1/F
610 Cha Kwo Ling Road, Kowloon
Tel:23489211-4 Fax:(852)27727666

DWG NO. : J858-CW-EP305 | REV. : B

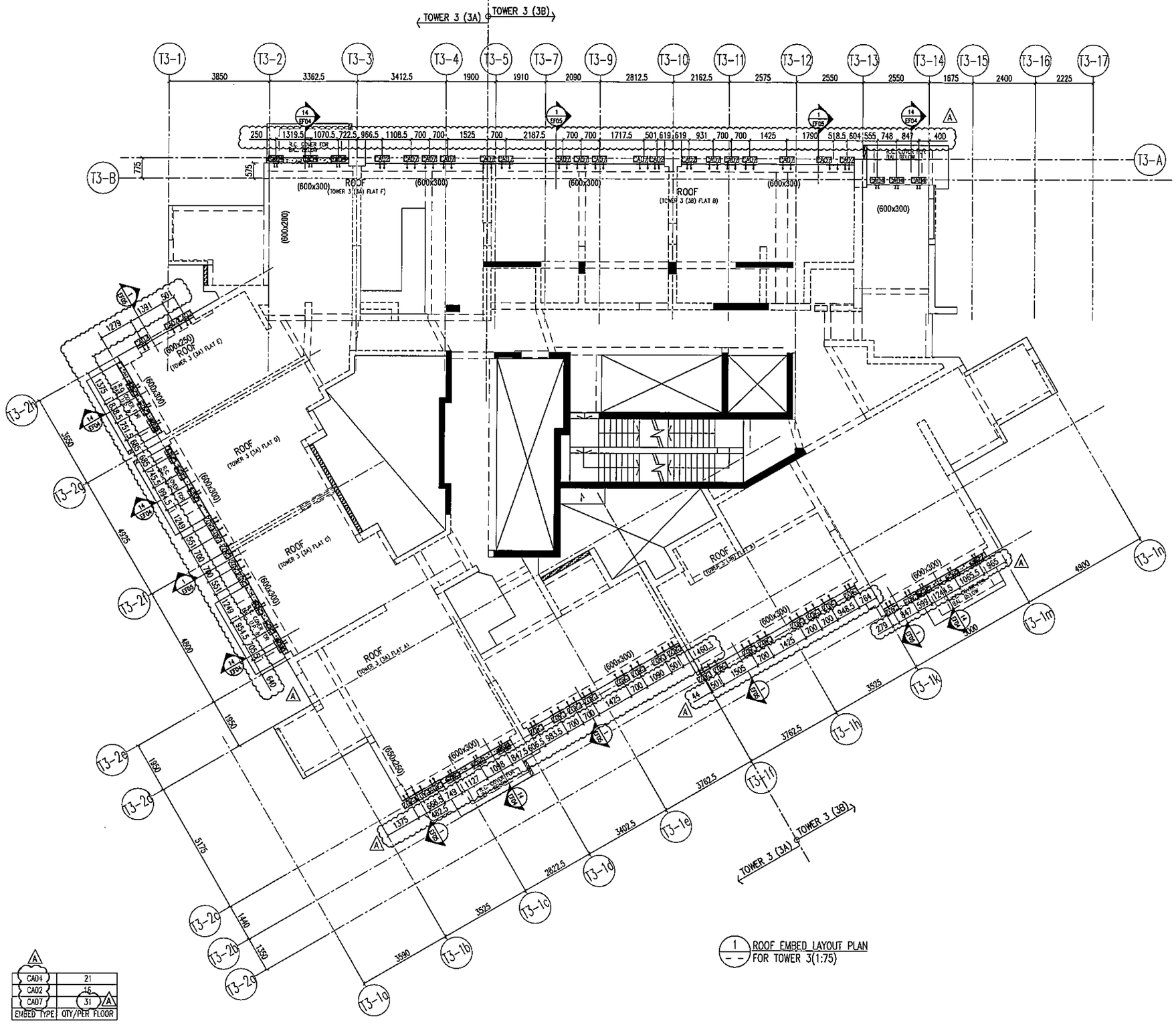

1 / — ROOF EMBED LAYOUT PLAN FOR TOWER 3(1:75)

ROOF	+217.00
FLOOR	FLOOR LEVEL(mPD)

EMBED TYPE	QTY/PER FLOOR
CA04	21
CA02	46
CA07	31

B.D. REF :

CLIENT :
信和置業有限公司
Sino Land Company Limited

ARCHITECT :
ronald lu & partners
Architects . Planners . Interior Designers
Ronald Lu & Partners (HK) Ltd.
呂元祥建築師事務所(香港)有限公司

MAIN CONTRACTOR :
Gammon

STRUCTURAL ENGINEER :
AECOM

FACADE CONSULTANT:
AECOM

NOTE :
1. ALL DIMENSIONS ARE IN mm.
2. ALL ELEVATIONS ARE VIEWED FROM OUTSIDE.
3. ALL DIMENSIONS TO BE VERIFIED ON SITE BEFORE FABRICATION.

LEGEND :
X1 — DETAIL MARK NO.
X001 — REFER SHEET NO.

1. F.F.L. --FINISHED FLOOR LEVEL
2. S.F.L. ---STRUCTURAL FLOOR LEVEL
3. (/R) --REVERSED DETAIL

NO.	DATE	REVISED	BY
A	06/04/22	REVISED AS PER COMMENTS	LS

JOB NO. : J-858

PROJECT :
PROPOSED RESIDENTIAL DEVELOPMENT
AT TKOTL 70RP, PHASE 11, LOHAS PARK
TSEUNG KWAN O, N.T.

TITLE :
ROOF EMBED LAYOUT PLAN
AT TOWER 3

DATE : 22-OCT-21 | SCALE : 1:75(A1)

DRAWN BY : KY | CHECKED BY : YB

美特鋁質有限公司
MIDI ALUMINIUM FABRICATOR LTD.
Units 6-8, Sunray Industrial Centre, 1/F
610 Cha Kwo Ling Road, Kowloon
Tel:23489211-4 Fax:(852)27727666

DWG NO. : J858-CW-EP306 | REV. : A

1 / – CAST-IN EMBED "CA07" TYPICAL

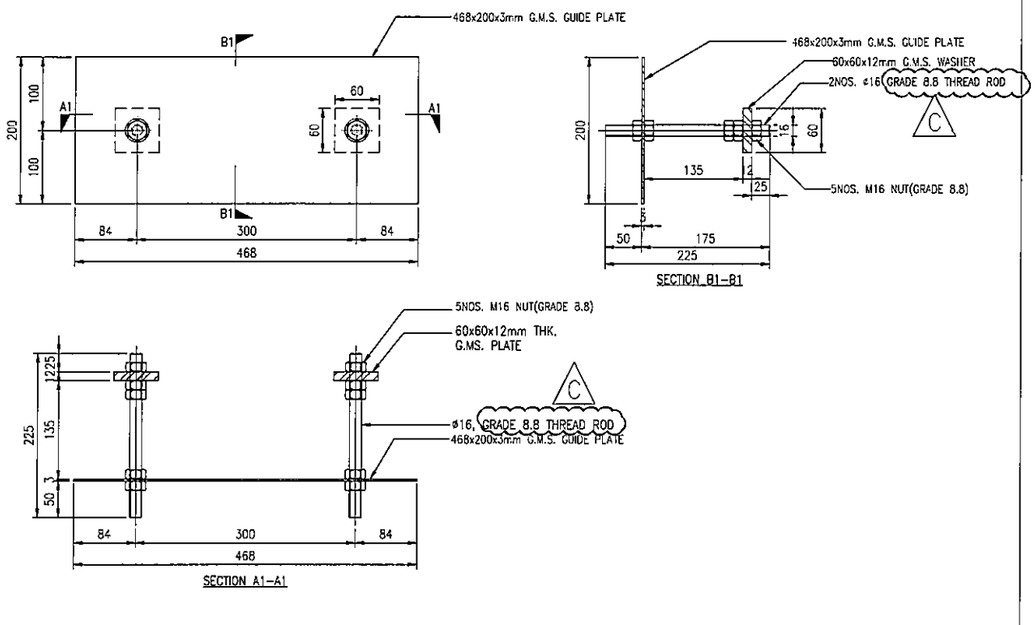

2 / – CAST-IN EMBED "CA02" TYPICAL

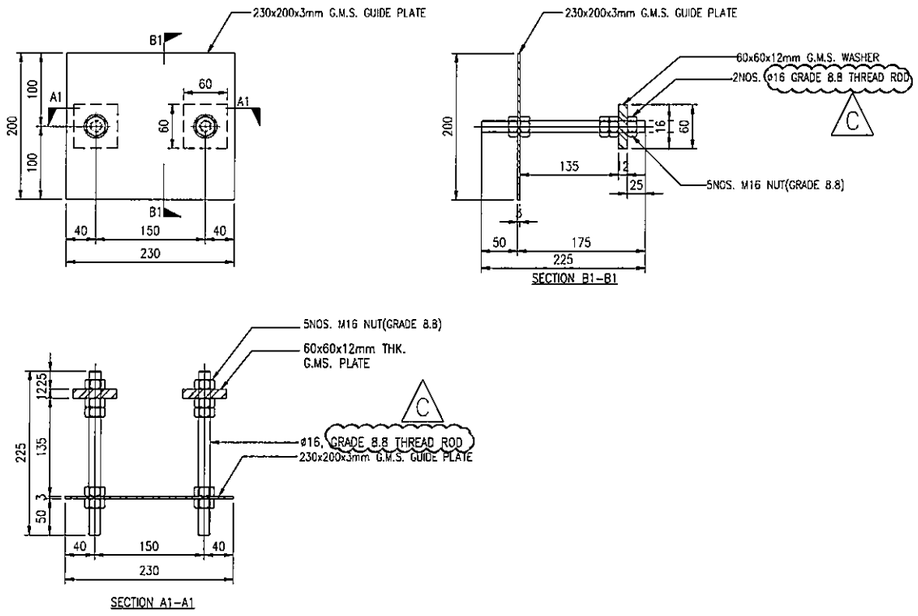

3 / – CAST-IN EMBED "CA08" CORNER

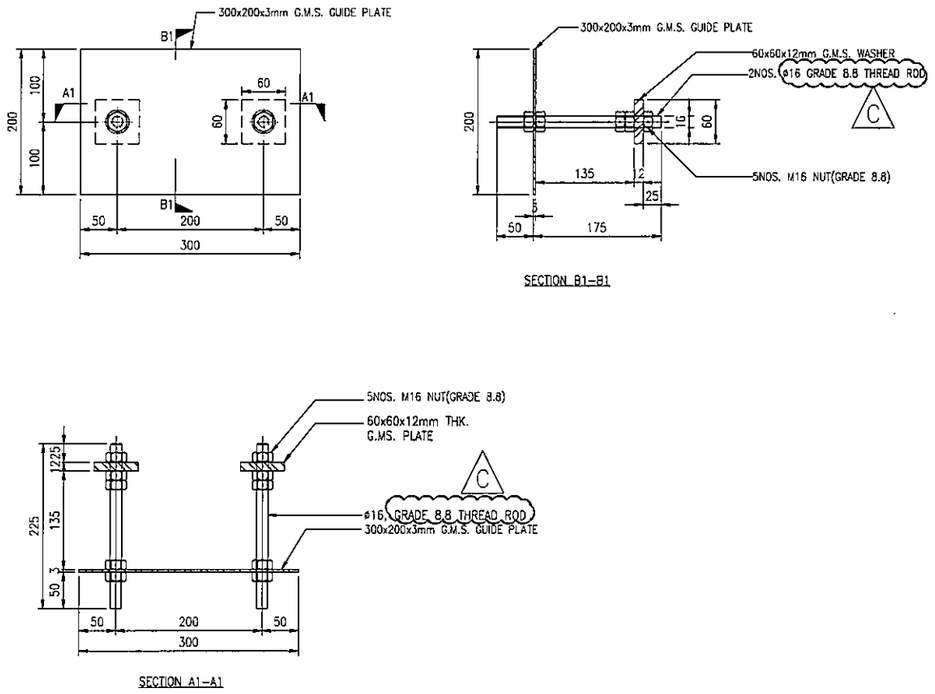

4 / – CAST-IN EMBED "CA06" START SILL

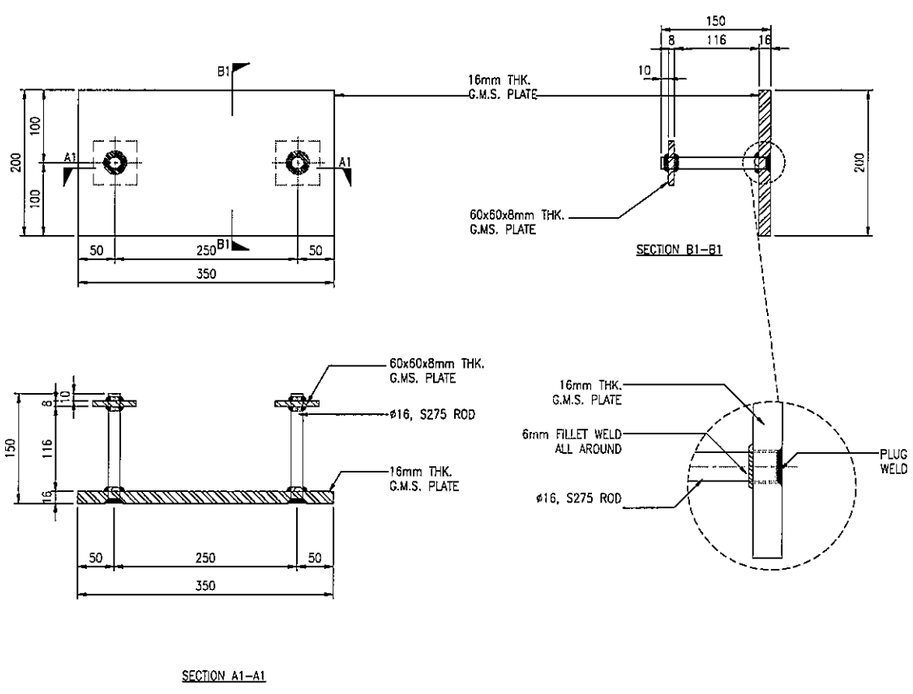

B.D. REF :

CLIENT :
信和置業有限公司
Sino Land Company Limited

ARCHITECT :
ronald lu & partners
Architects . Planners . Interior Designers
Ronald Lu & Partners (HK) Ltd.
呂元祥建築師事務所(香港)有限公司

MAIN CONTRACTOR :
Gammon

STRUCTURAL ENGINEER :
AECOM

FACADE CONSULTANT:
AECOM

NOTE :
1. ALL DIMENSIONS ARE IN mm.
2. ALL ELEVATIONS ARE VIEWED FROM OUTSIDE.
3. ALL DIMENSIONS TO BE VERIFIED ON SITE BEFORE FABRICATION.

LEGEND :
X1 / X001 — DETAIL MARK NO. / REFER SHEET NO.
1. F.F.L. --FINISHED FLOOR LEVEL
2. S.F.L. --STRUCTURAL FLOOR LEVEL
3. (/R) --REVERSED DETAIL

NO.	DATE	REVISED	BY
C	06/04/22	REVISED AS PER COMMENTS	LS
B	22/02/22	REVISED AS PER COMMENTS	LS
A	14/12/21	REVISED AS PER COMMENTS	LS

JOB NO. : J-858

PROJECT :
PROPOSED RESIDENTIAL DEVELOPMENT
AT TKOTL 70RP, PHASE 11, LOHAS PARK
TSEUNG KWAN O, N.T.

TITLE :
CURTAIN WALL EMBED DETAIL
AT TOWER 1, 2, 3

DATE : 22-OCT-21 | SCALE : 1:4(A1)

DRAWN BY : KY | CHECKED BY : YB

美特鋁製有限公司
MIDI ALUMINIUM FABRICATOR LTD.
Units 6-8, Sunray Industrial Centre, 1/F
610 Cha Kwo Ling Road, Kowloon
Tel:23489211-4 Fax:(852)27727666

DWG NO. : J858-CW-EF01 | REV. : C

5 — CAST-IN EMBED "CA04" SLIDING DOOR

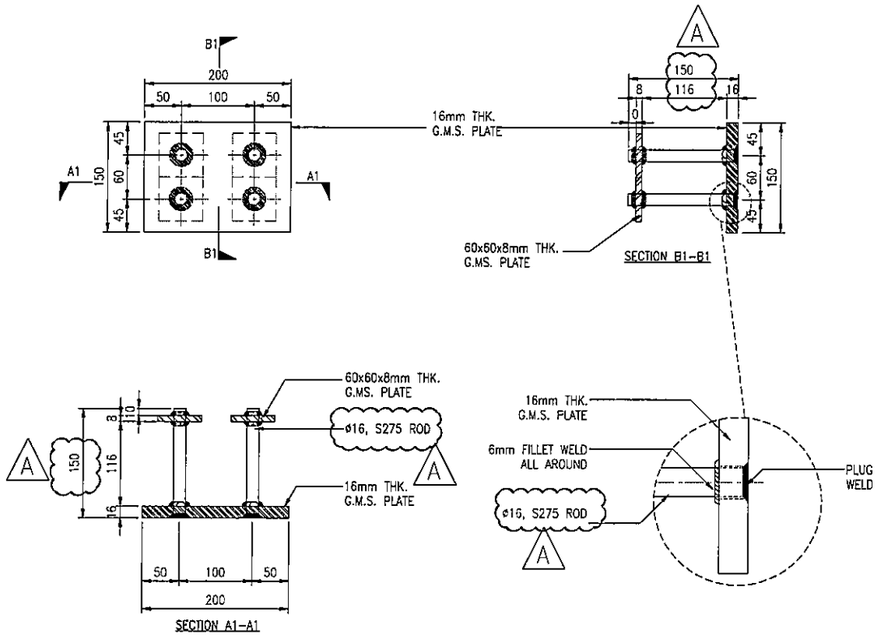

6 — CAST-IN EMBED "CA09" TYPICAL

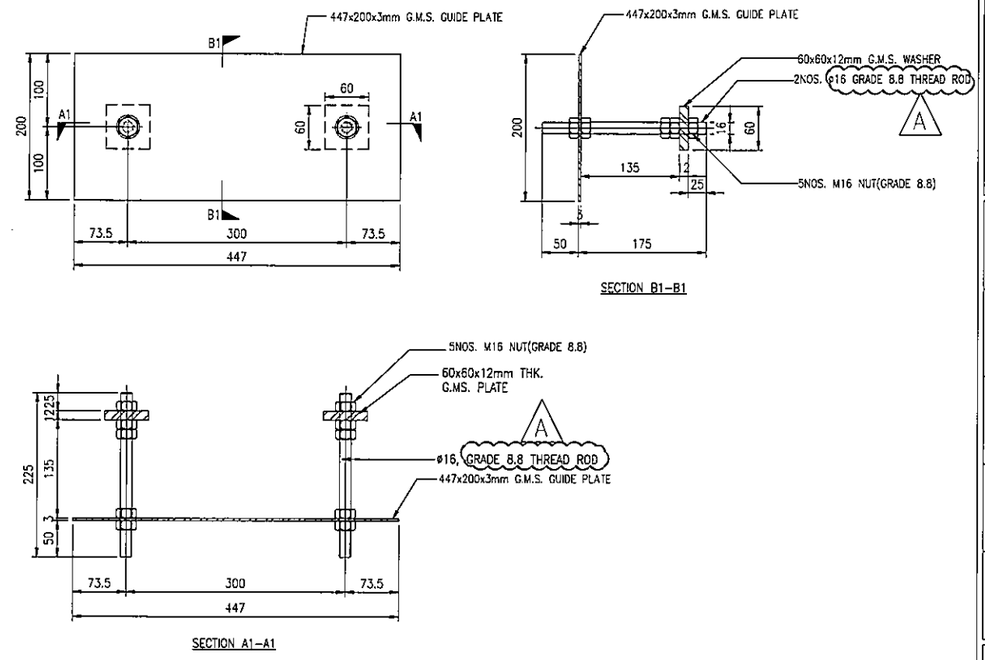

B.D. REF :

CLIENT :
信和置業有限公司
Sino Land Company Limited

ARCHITECT :
ronald lu & partners
Architects · Planners · Interior Designers
Ronald Lu & Partners (HK) Ltd.
呂元祥建築師事務所(香港)有限公司

MAIN CONTRACTOR :
Gammon

STRUCTURAL ENGINEER :
AECOM

FACADE CONSULTANT:
AECOM

NOTE :
1. ALL DIMENSIONS ARE IN mm.
2. ALL ELEVATIONS ARE VIEWED FROM OUTSIDE.
3. ALL DIMENSIONS TO BE VERIFIED ON SITE BEFORE FABRICATION.

LEGEND :
- X1 / XOO1 — DETAIL MARK NO. / REFER SHEET NO.
1. F.F.L. --FINISHED FLOOR LEVEL
2. S.F.L. --STRUCTURAL FLOOR LEVEL
3. (/B) --REVERSED DETAIL

NO.	DATE	REVISED	BY
A	06/04/22	REVISED AS PER COMMENTS	LS

JOB NO. : J-858

PROJECT :
PROPOSED RESIDENTIAL DEVELOPMENT
AT TKOTL 70RP, PHASE 11, LOHAS PARK
TSEUNG KWAN O, N.T.

TITLE :
CURTAIN WALL EMBED DETAIL
AT TOWER 1, 2, 3

DATE : 22-OCT-21	SCALE : 1:4(A1)
DRAWN BY : KY	CHECKED BY : YB

美特鋁質有限公司
MIDI ALUMINIUM FABRICATOR LTD.
Units 6-8, Sunray Industrial Centre, 1/F
610 Cha Kwo Ling Road, Kowloon
Tel:23489211-4 Fax:(852)27727666

DWG NO. : J858-CW-EF01A | REV. : A

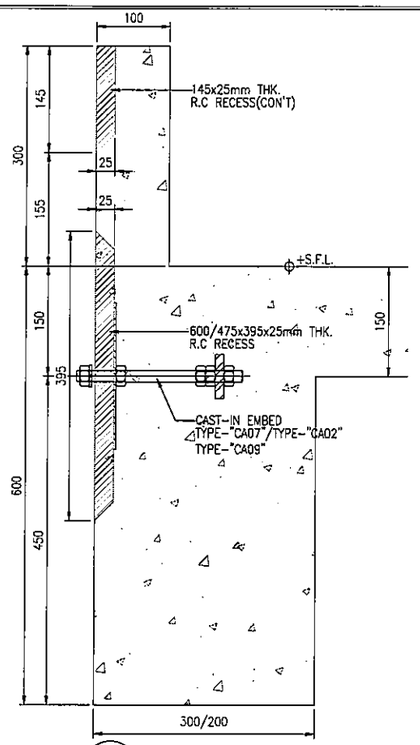

1 EF02 CAST-IN DETAIL CURTAIN WALL

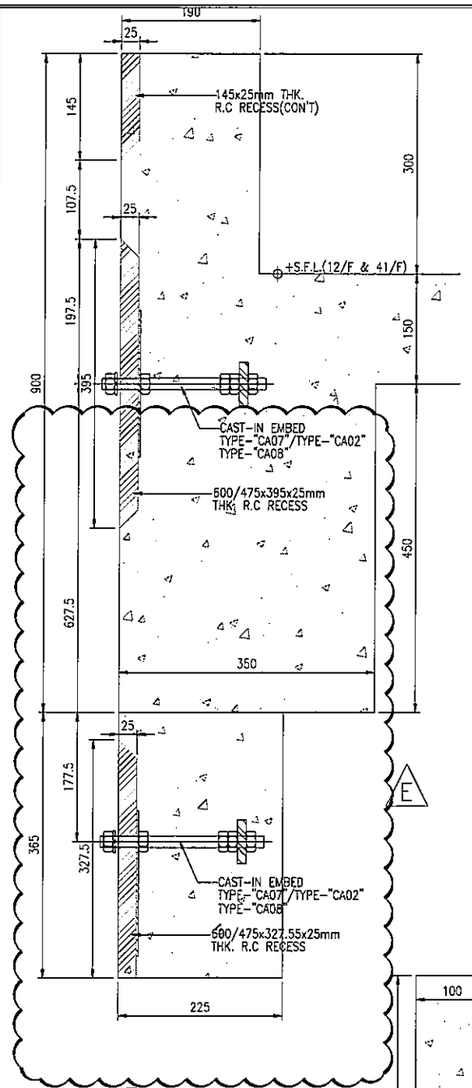

3 EF02 CAST-IN DETAIL CURTAIN WALL

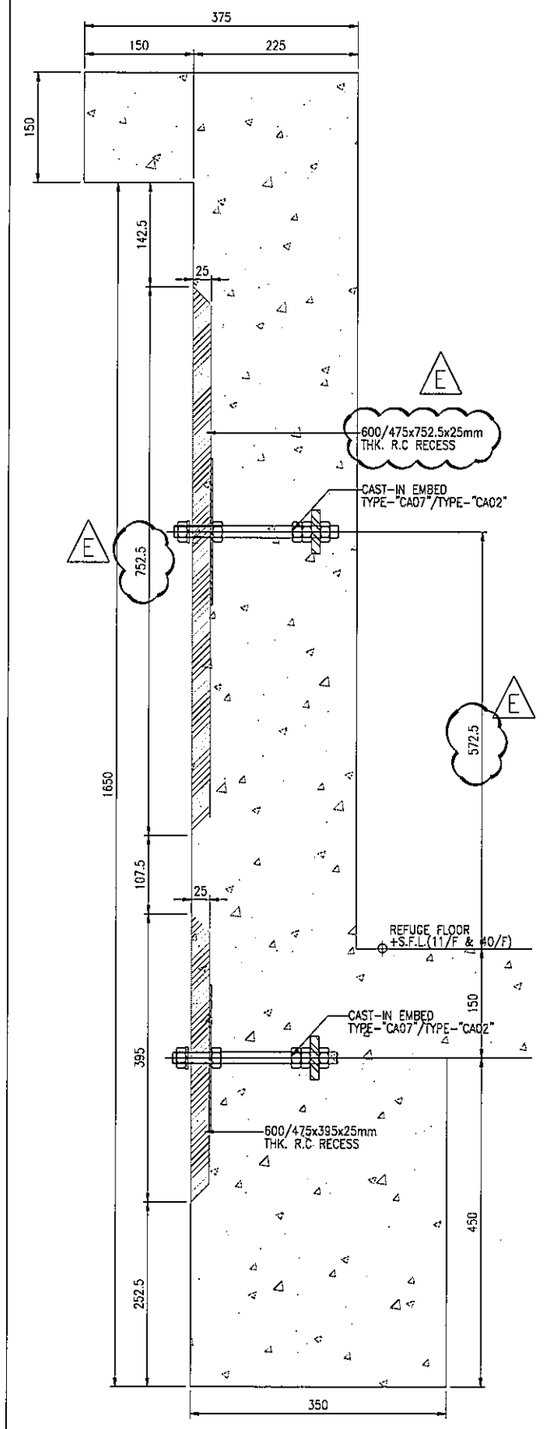

5 EF02 CAST-IN DETAIL CURTAIN WALL

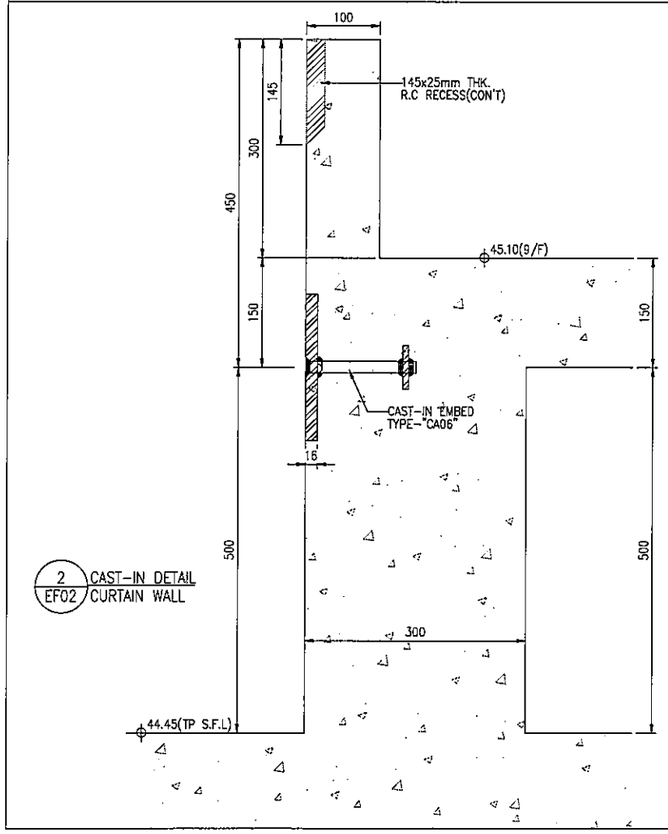

2 EF02 CAST-IN DETAIL CURTAIN WALL

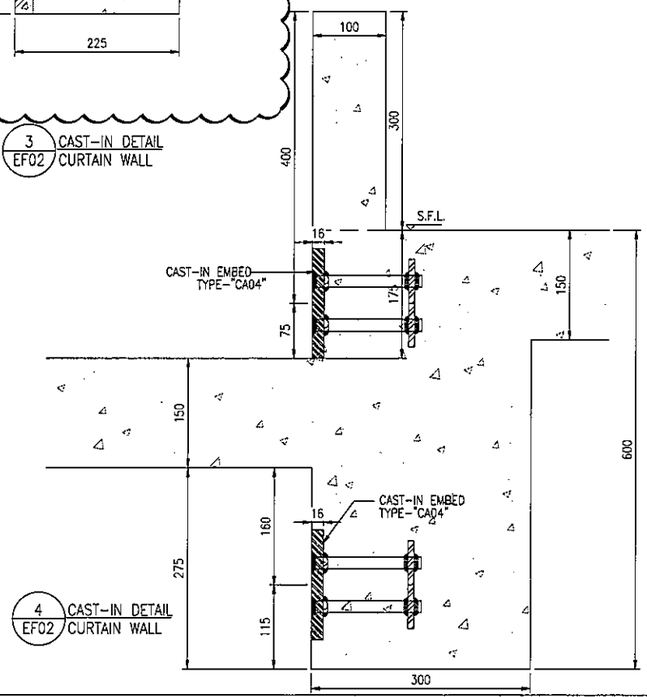

4 EF02 CAST-IN DETAIL CURTAIN WALL

B.D. REF :

CLIENT :
信和置業有限公司
Sino Land Company Limited

ARCHITECT :
ronald lu & partners
Architects . Planners . Interior Designers
Ronald Lu & Partners (HK) Ltd.
呂元祥建築師事務所(香港)有限公司

MAIN CONTRACTOR :
Gammon

STRUCTURAL ENGINEER :
AECOM

FACADE CONSULTANT:
AECOM

NOTE :
1. ALL DIMENSIONS ARE IN mm.
2. ALL ELEVATIONS ARE VIEWED FROM OUTSIDE.
3. ALL DIMENSIONS TO BE VERIFIED ON SITE BEFORE FABRICATION.

LEGEND :
X1 — DETAIL MARK NO.
XX01 — REFER SHEET NO.
1. F.F.L. --FINISHED FLOOR LEVEL
2. S.F.L. --STRUCTURAL FLOOR LEVEL
3. /R --REVERSED DETAIL

NO.	DATE	REVISED	BY
E	25/05/22	REVISED AS PER COMMENTS	LS
D	06/04/22	REVISED AS PER COMMENTS	LS
C	22/02/22	REVISED AS PER COMMENTS	LS
B	14/12/21	REVISED AS PER COMMENTS	LS
A	03/12/21	REVISED AS PER COMMENTS	LS

JOB NO. : J-858

PROJECT :
PROPOSED RESIDENTIAL DEVELOPMENT
AT TKOTL 70RP, PHASE 11, LOHAS PARK
TSEUNG KWAN O, N.T.

TITLE :
CURTAIN WALL EMBED DETAIL
AT TOWER 1, 2, 3

DATE : 22-OCT-21 | SCALE : 1:4(A1)

DRAWN BY : KY | CHECKED BY : YB

美特鋁質有限公司
MIDI ALUMINIUM FABRICATOR LTD.
Units 6-8, Sunray Industrial Centre, 1/F
610 Cha Kwo Ling Road, Kowloon
Tel:23489211-4 Fax:(852)27727666

DWG NO. : J858-CW-EF02 | REV. : E

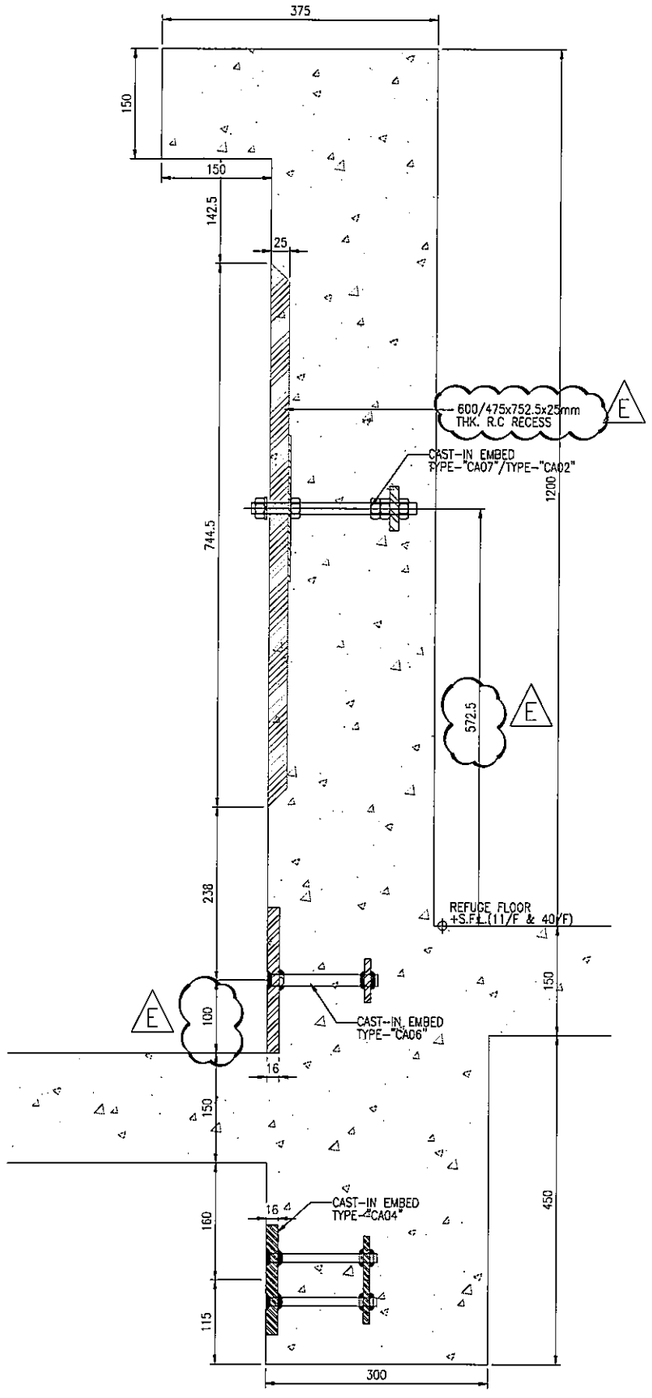

6 EF03 CAST-IN DETAIL CURTAIN WALL

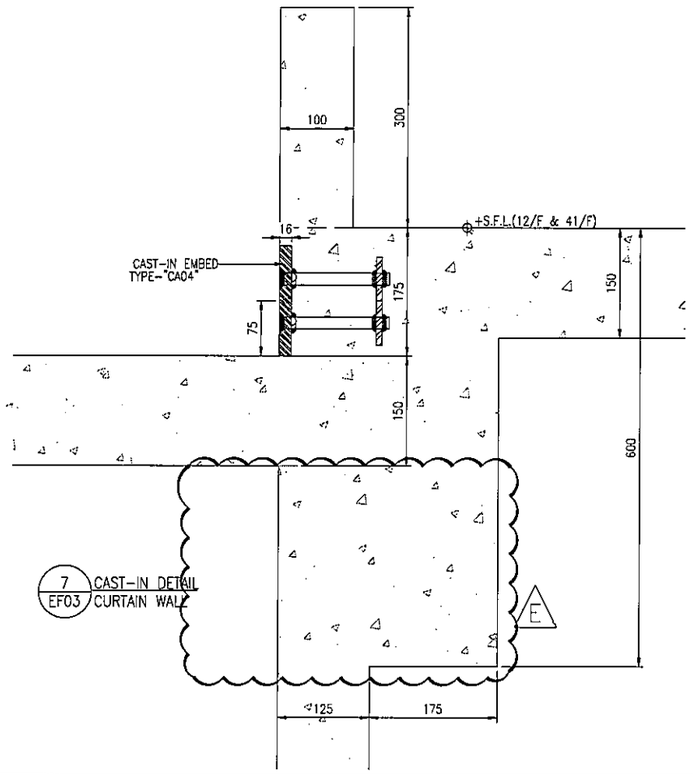

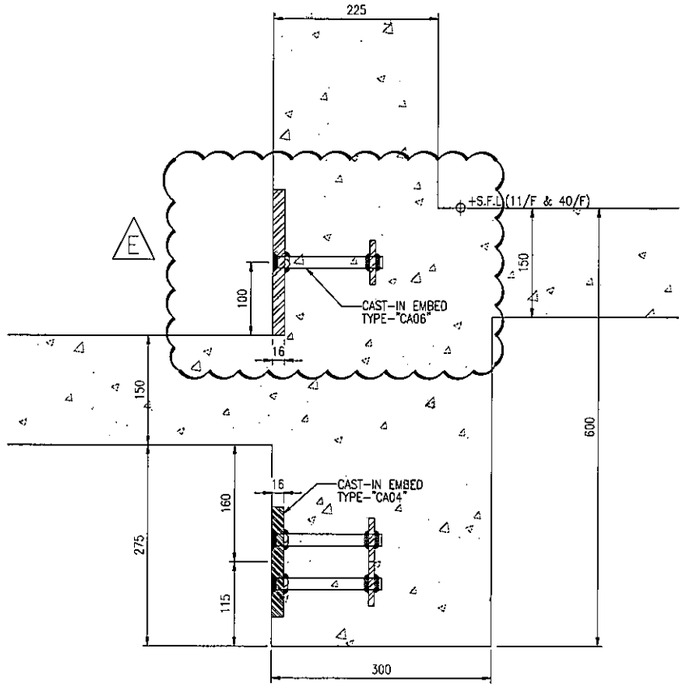

8 EF03 CAST-IN DETAIL CURTAIN WALL

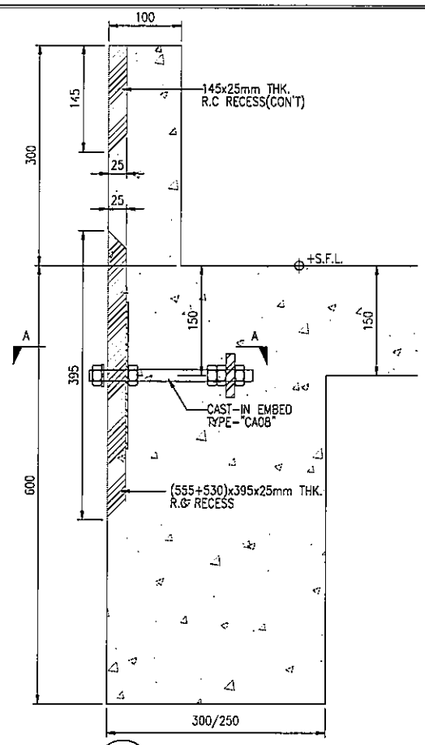

9 EF03 CAST-IN DETAIL CURTAIN WALL

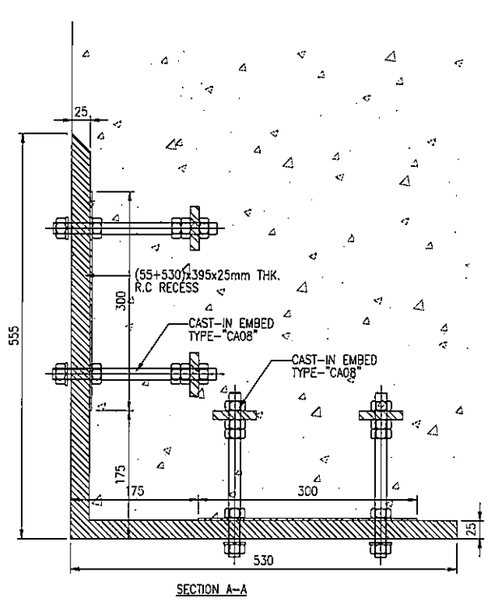

SECTION A-A

B.D. REF :

CLIENT :
信和置業有限公司
Sino Land Company Limited

ARCHITECT :
ronald lu & partners
Architects, Planners, Interior Designers
Ronald Lu & Partners (HK) Ltd.
呂元祥建築師事務所(香港)有限公司

MAIN CONTRACTOR :
Gammon

STRUCTURAL ENGINEER :
AECOM

FACADE CONSULTANT:
AECOM

NOTE :
1. ALL DIMENSIONS ARE IN mm.
2. ALL ELEVATIONS ARE VIEWED FROM OUTSIDE.
3. ALL DIMENSIONS TO BE VERIFIED ON SITE BEFORE FABRICATION.

LEGEND :
- X1 / XDD1 — DETAIL MARK NO. / REFER SHEET NO.
1. F.F.L. --FINISHED FLOOR LEVEL
2. S.F.L. --STRUCTURAL FLOOR LEVEL
3. /R --REVERSED DETAIL

NO.	DATE	REVISED	BY
E	25/05/22	REVISED AS PER COMMENTS	LS
D	06/04/22	REVISED AS PER COMMENTS	LS
C	22/02/22	REVISED AS PER COMMENTS	LS
B	14/12/21	REVISED AS PER COMMENTS	LS
A	03/12/21	REVISED AS PER COMMENTS	LS

JOB NO. : J-858

PROJECT :
PROPOSED RESIDENTIAL DEVELOPMENT
AT TKOTL 70RP, PHASE 11, LOHAS PARK
TSEUNG KWAN O, N.T.

TITLE :
CURTAIN WALL EMBED DETAIL
AT TOWER 1, 2, 3

DATE : 22-OCT-21 | SCALE : 1:4(A1)

DRAWN BY : KY | CHECKED BY : YB

美特鋁質有限公司
MIDI ALUMINIUM FABRICATOR LTD.
Units 6-8, Sunray Industrial Centre, 1/F
610 Cha Kwo Ling Road, Kowloon
Tel:23489211-4 Fax:(852)27727666

DWG NO. : J858-CW-EF03 | REV. : E

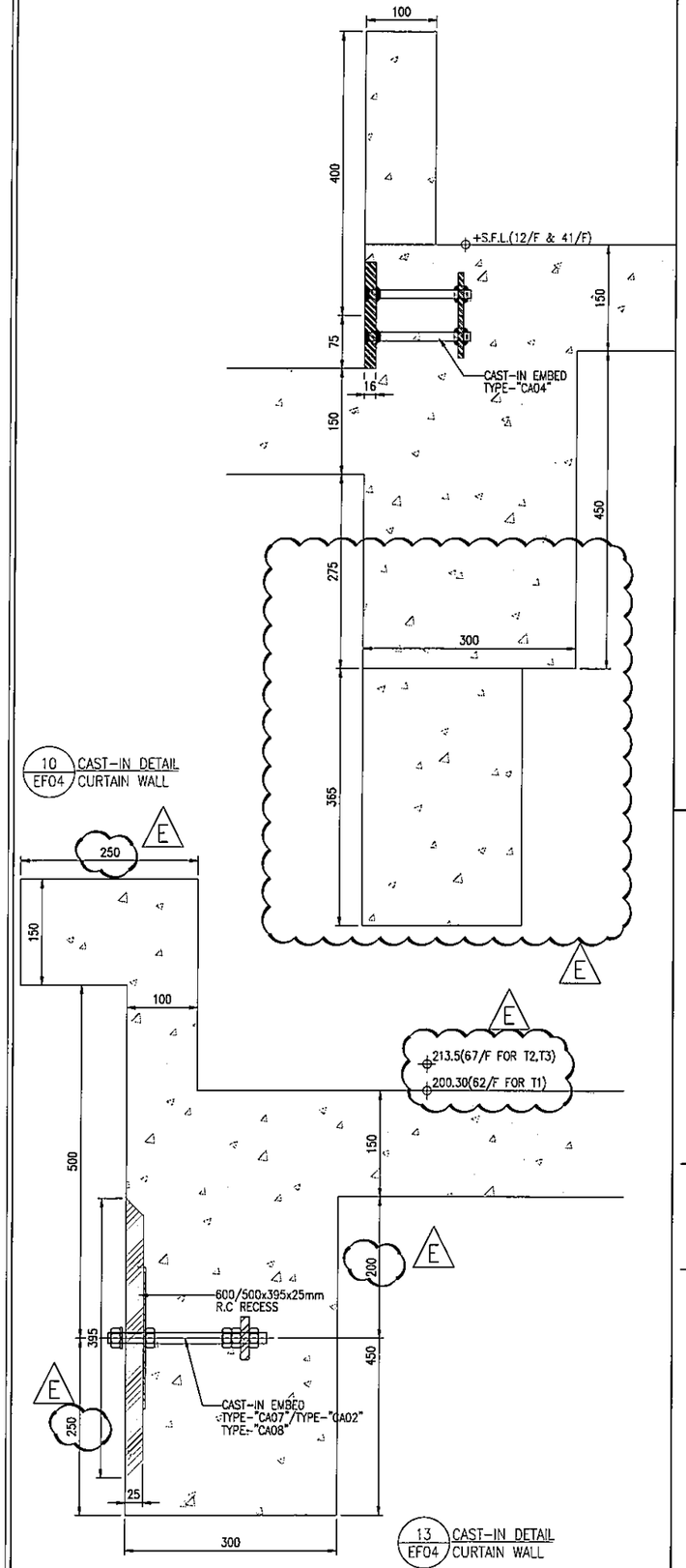

10 EF04 CAST-IN DETAIL CURTAIN WALL

13 EF04 CAST-IN DETAIL CURTAIN WALL

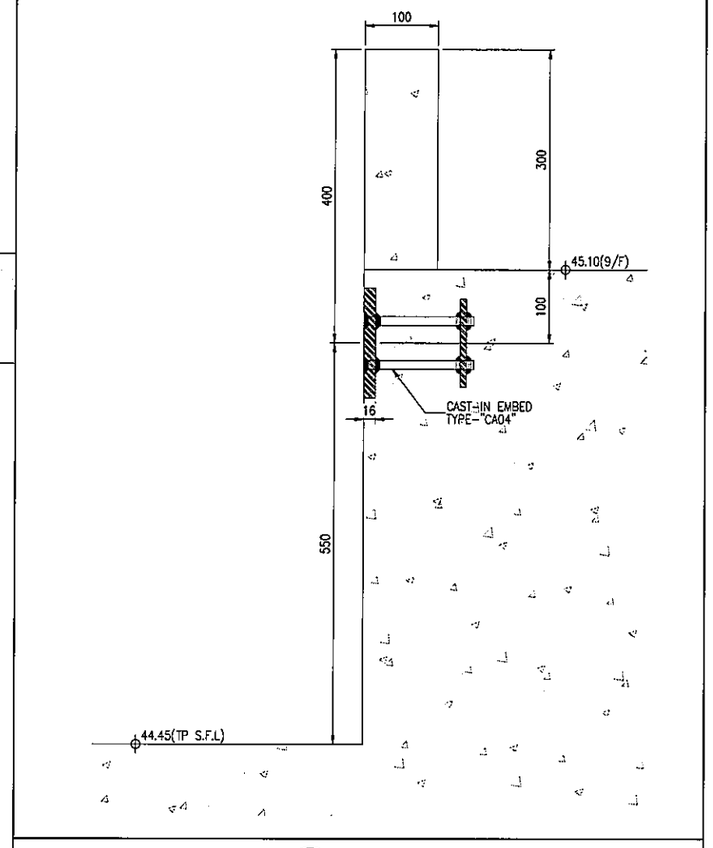

11 EF04 CAST-IN DETAIL CURTAIN WALL

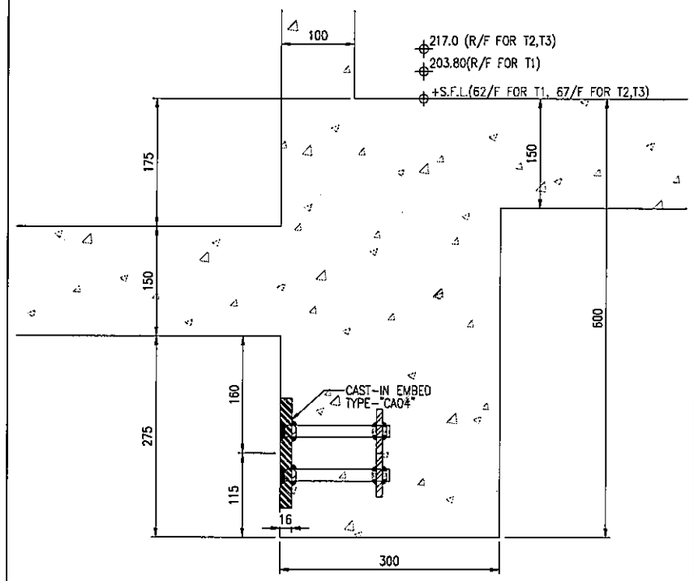

14 EF04 CAST-IN DETAIL CURTAIN WALL

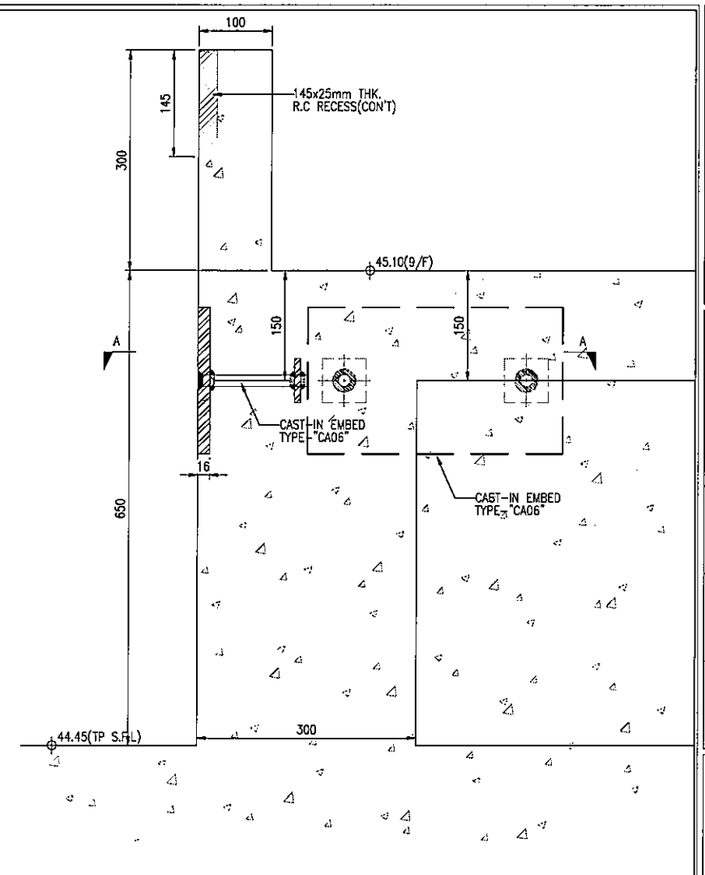

12 EF04 CAST-IN DETAIL CORNER

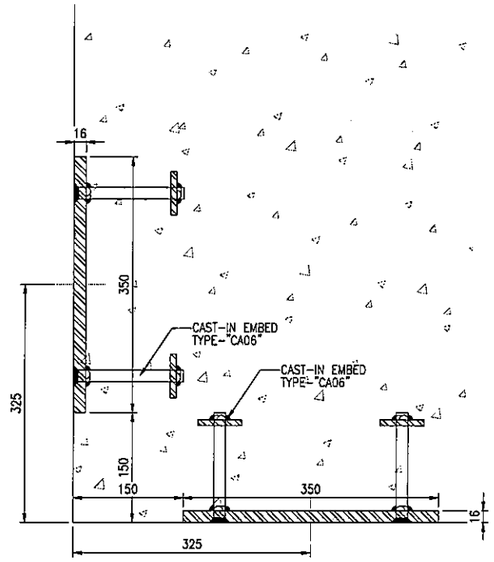

SECTION A-A

B.O. REF :

CLIENT :
信和置業有限公司
Sino Land Company Limited

ARCHITECT :
ronald lu & partners
Architects · Planners · Interior Designers
Ronald Lu & Partners (HK) Ltd.
呂元祥建築師事務所(香港)有限公司

MAIN CONTRACTOR :
Gammon

STRUCTURAL ENGINEER :
AECOM

FACADE CONSULTANT:
AECOM

NOTE :
1. ALL DIMENSIONS ARE IN mm.
2. ALL ELEVATIONS ARE VIEWED FROM OUTSIDE.
3. ALL DIMENSIONS TO BE VERIFIED ON SITE BEFORE FABRICATION.

LEGEND :
X1 / X001 — DETAIL MARK NO. / REFER SHEET NO.
1. F.F.L. --FINISHED FLOOR LEVEL
2. S.F.L. ---STRUCTURAL FLOOR LEVEL
3. (/R) --REVERSED DETAIL

NO.	DATE	REVISED	BY
E	25/05/22	REVISED AS PER COMMENTS	LS
D	06/04/22	REVISED AS PER COMMENTS	LS
C	22/02/22	REVISED AS PER COMMENTS	LS
B	14/12/21	REVISED AS PER COMMENTS	LS
A	03/12/21	REVISED AS PER COMMENTS	LS

JOB NO. : J-858

PROJECT :
PROPOSED RESIDENTIAL DEVELOPMENT
AT TKOTL 70RP, PHASE 11, LOHAS PARK
TSEUNG KWAN O, N.T.

TITLE :
CURTAIN WALL EMBED DETAIL
AT TOWER 1, 2, 3

DATE : 22-OCT-21 | SCALE : 1:4(A1)

DRAWN BY : KY | CHECKED BY : YB

美特鋁質有限公司
MIDI ALUMINIUM FABRICATOR LTD.
Units 6-8, Sunray Industrial Centre, 1/F
610 Cha Kwo Ling Road, Kowloon
Tel:23489211-4 Fax:(852)27727666

DWG NO. : J858-CW-EF04 | REV. : E

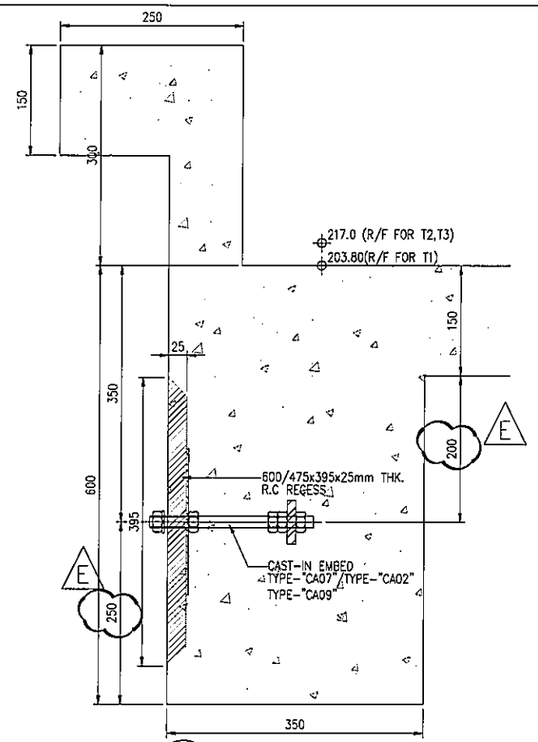

1 EF05 CAST-IN DETAIL CURTAIN WALL

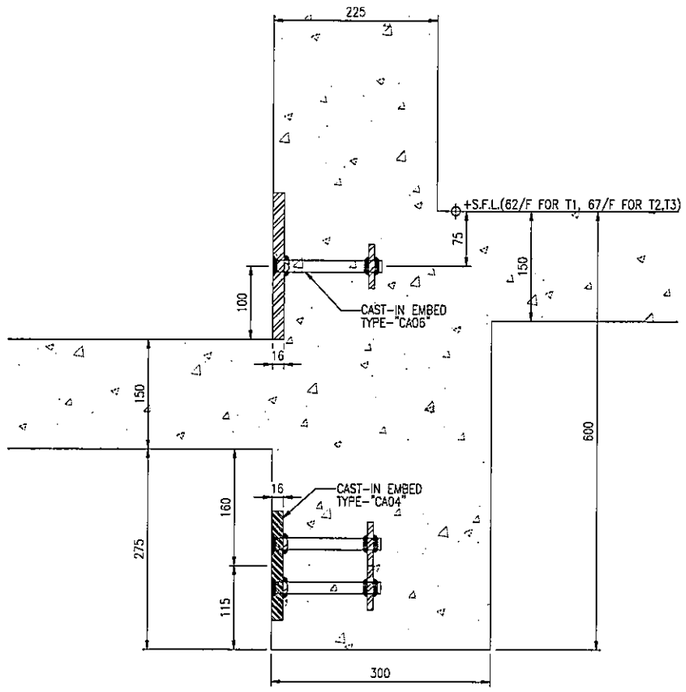

2 EF05 CAST-IN DETAIL CURTAIN WALL

B.D. REF :

CLIENT :
信和置業有限公司
Sino Land Company Limited

ARCHITECT :
ronald lu & partners
Architects . Planners . Interior Designers
Ronald Lu & Partners (HK) Ltd.
呂元祥建築師事務所(香港)有限公司

MAIN CONTRACTOR :
Gammon

STRUCTURAL ENGINEER :
AECOM

FACADE CONSULTANT:
AECOM

NOTE :
1. ALL DIMENSIONS ARE IN mm.
2. ALL ELEVATIONS ARE VIEWED FROM OUTSIDE.
3. ALL DIMENSIONS TO BE VERIFIED ON SITE BEFORE FABRICATION.

LEGEND :
X1 / X001 — DETAIL MARK NO. / REFER SHEET NO.
1. F.F.L. --FINISHED FLOOR LEVEL
2. S.F.L. --STRUCTURAL FLOOR LEVEL
3. (R) --REVERSED DETAIL

NO.	DATE	REVISED	BY
A	25/05/22	REVISED AS PER COMMENTS	LS

JOB NO. : J--858

PROJECT :
PROPOSED RESIDENTIAL DEVELOPMENT
AT TKOTL 70RP, PHASE 11, LOHAS PARK
TSEUNG KWAN O, N.T.

TITLE :
CURTAIN WALL EMBED DETAIL
AT TOWER 1, 2, 3

DATE : 22-OCT-21	SCALE : 1:4(A1)
DRAWN BY : KY	CHECKED BY : YB

美特鋁質有限公司
MIDI ALUMINIUM FABRICATOR LTD.
Units 6-8, Sunray Industrial Centre, 1/F
610 Cha Kwo Ling Road, Kowloon
Tel:23489211-4 Fax:(852)27727666

DWG NO. : J858-CW-EF05 | REV. : A

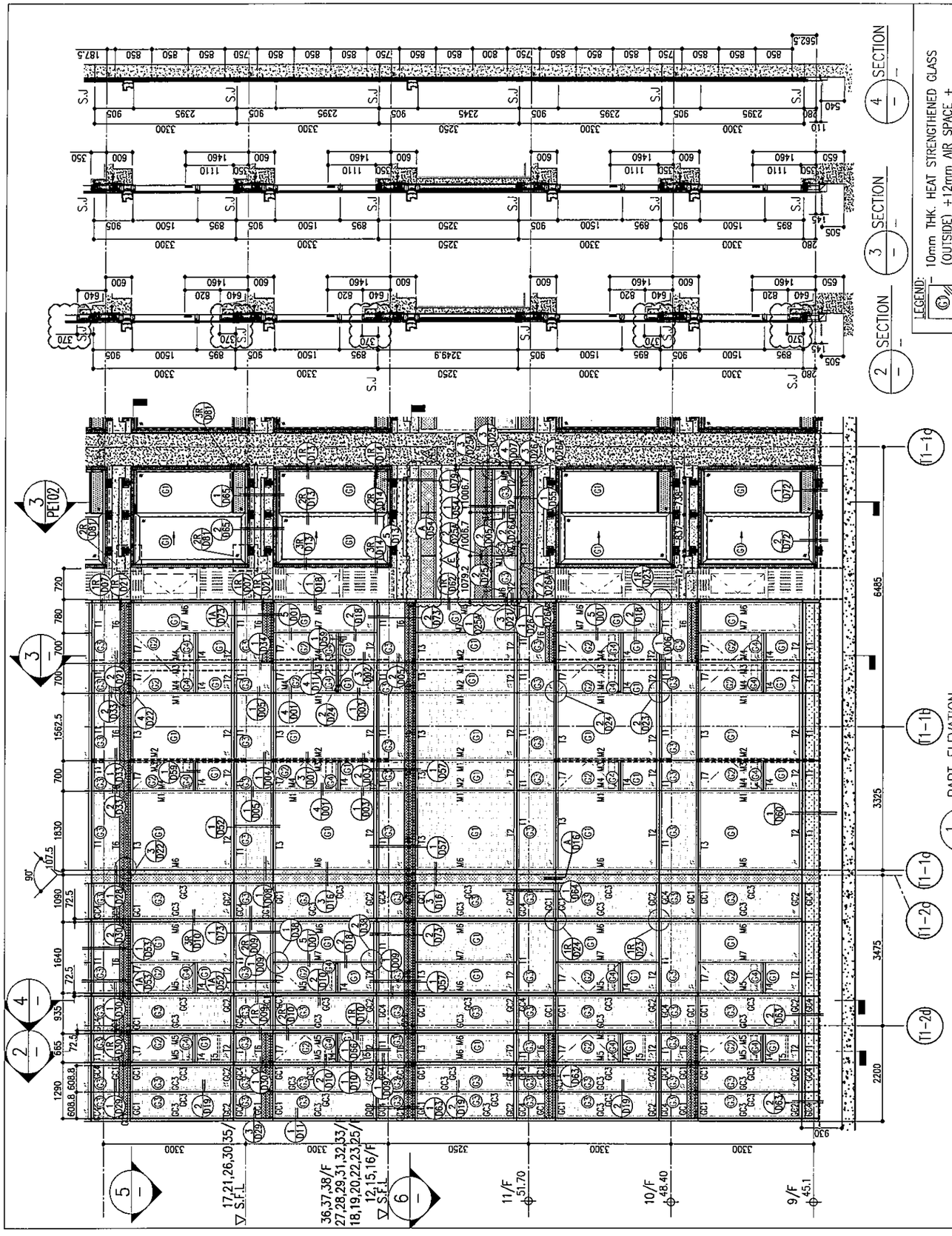

B.D. REF :

CLIENT :
信和置業有限公司
Sino Land Company Limited

ARCHITECT :
ronald lu & partners
Architects · Planners · Interior Designers
Ronald Lu & Partners (HK) Ltd.
呂元祥建築師事務所(香港)有限公司

MAIN CONTRACTOR :
Gammon

STRUCTURAL ENGINEER :
AECOM

FACADE CONSULTANT:
AECOM

NOTE :
1. ALL DIMENSIONS ARE IN mm.
2. ALL ELEVATIONS ARE VIEWED FROM OUTSIDE.
3. ALL DIMENSIONS TO BE VERIFIED ON SITE BEFORE FABRICATION.

LEGEND :
X1 / X001 — DETAIL MARK NO. / REFER SHEET NO.
1. F.F.L. -- FINISHED FLOOR LEVEL
2. S.F.L. -- STRUCTURAL FLOOR LEVEL
3. (R) -- REVERSED DETAIL

NO.	DATE	REVISED	BY
E	23/05/22	REVISED AS PER COMMENTS	LS
D	06/04/22	REVISED AS PER COMMENTS	LS
C	24/01/22	REVISED AS PER COMMENTS	LS
B	20/12/21	REVISED AS PER COMMENTS	LS
A	03/12/21	REVISED AS PER COMMENTS	LS

JOB NO. : J-858

PROJECT :
PROPOSED RESIDENTIAL DEVELOPMENT
AT TKOTL 70RP, PHASE 11, LOHAS PARK
TSEUNG KWAN O, N.T.

TITLE :
TYPICAL FLOOR PARTIAL ELEVATION & SECTION, PLAN FOR CURTAIN WALL (TOWER 1)

DATE : 22-OCT-21 | SCALE : 1:50(A1)
DRAWN BY : | CHECKED BY :

美特鋁質有限公司
MIDI ALUMINIUM FABRICATOR LTD.
Units 6-8, Sunray Industrial Centre, 1/F
610 Cha Kwo Ling Road, Kowloon
Tel:23489211-4 Fax:(852)27727666

DWG NO. : J858-CW-PE101 | REV. : E

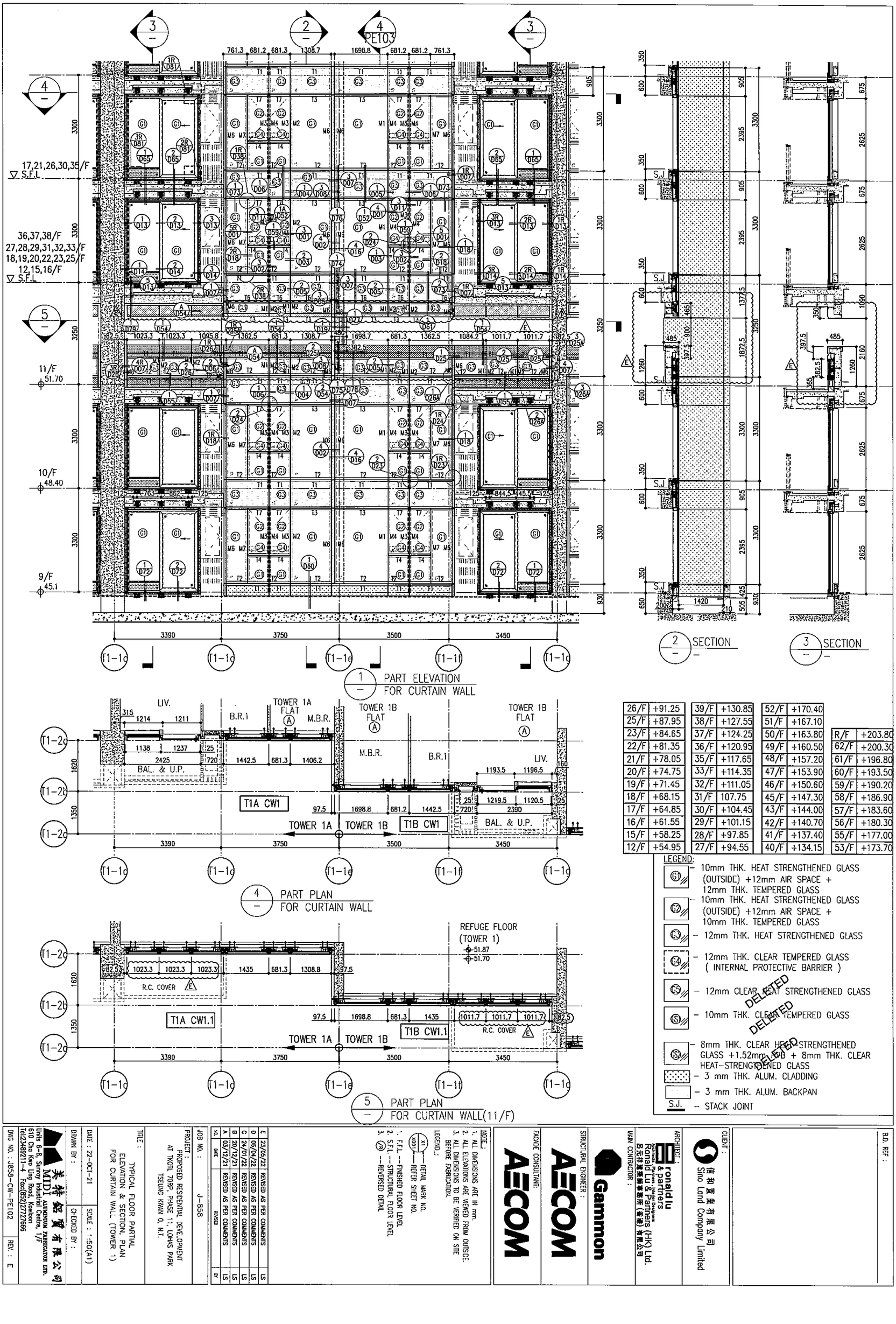

26/F	+91.25	39/F	+130.85	52/F	+170.40		
25/F	+87.95	38/F	+127.55	51/F	+167.10		
23/F	+84.65	37/F	+124.25	50/F	+163.80	R/F	+203.80
22/F	+81.35	36/F	+120.95	49/F	+160.50	62/F	+200.30
21/F	+78.05	35/F	+117.65	48/F	+157.20	61/F	+196.80
20/F	+74.75	33/F	+114.35	47/F	+153.90	60/F	+193.50
19/F	+71.45	32/F	+111.05	46/F	+150.60	59/F	+190.20
18/F	+68.15	31/F	107.75	45/F	+147.30	58/F	+186.90
17/F	+64.85	30/F	+104.45	43/F	+144.00	57/F	+183.60
16/F	+61.55	29/F	+101.15	42/F	+140.70	56/F	+180.30
15/F	+58.25	28/F	+97.85	41/F	+137.40	55/F	+177.00
12/F	+54.95	27/F	+94.55	40/F	+134.15	53/F	+173.70

LEGEND:

- G1 – 10mm THK. HEAT STRENGTHENED GLASS (OUTSIDE) +12mm AIR SPACE + 12mm THK. TEMPERED GLASS
- G2 – 10mm THK. HEAT STRENGTHENED GLASS (OUTSIDE) +12mm AIR SPACE + 10mm THK. TEMPERED GLASS
- G3 – 12mm THK. HEAT STRENGTHENED GLASS
- G4 – 12mm THK. CLEAR TEMPERED GLASS (INTERNAL PROTECTIVE BARRIER)
- G5 – 12mm CLEAR HEAT STRENGTHENED GLASS DELETED
- S1 – 10mm THK. CLEAR TEMPERED GLASS DELETED
- S2 – 8mm THK. CLEAR HEAT STRENGTHENED GLASS +1.52mm PVB + 8mm THK. CLEAR HEAT-STRENGTHENED GLASS
- 3 mm THK. ALUM. CLADDING
- 3 mm THK. ALUM. BACKPAN
- S.J. – STACK JOINT

NOTE:
1. ALL DIMENSIONS ARE IN mm.
2. ALL ELEVATIONS ARE VIEWED FROM OUTSIDE.
3. ALL DIMENSIONS TO BE VERIFIED ON SITE BEFORE FABRICATION.

LEGEND:
- X1 – DETAIL MARK NO.
- x001 – REFER SHEET NO.
1. F.F.L. --FINISHED FLOOR LEVEL
2. S.F.L. --STRUCTURAL FLOOR LEVEL
3. (R) --REVERSED DETAIL

NO.	DATE	REVISED	BY
E	23/05/22	REVISED AS PER COMMENTS	LS
D	06/04/22	REVISED AS PER COMMENTS	LS
C	24/01/22	REVISED AS PER COMMENTS	LS
B	20/12/21	REVISED AS PER COMMENTS	LS
A	03/12/21	REVISED AS PER COMMENTS	LS

JOB NO. : J-858
PROJECT : PROPOSED RESIDENTIAL DEVELOPMENT AT KOTL 70RP, PHASE 11, LOHAS PARK TSEUNG KWAN O, N.T.
TITLE : TYPICAL FLOOR PARTIAL ELEVATION & SECTION, PLAN FOR CURTAIN WALL (TOWER 1)
DATE : 22-OCT-21 | SCALE : 1:50(A1)
DRAWN BY : | CHECKED BY :
DWG NO. : J858-CW-PE102 | REV. : E

美特鋁製有限公司 MIDI ALUMINIUM FABRICATOR LTD.
Units 6-8, Sunray Industrial Centre, 1/F 610 Cha Kwo Ling Road, Kowloon Tel:23489211-4 Fax:(852)27727866

CONSULTANTS:
FACADE CONSULTANT: AECOM
STRUCTURAL ENGINEER: AECOM
MAIN CONTRACTOR: Gammon
ARCHITECT: ronald lu & partners / Ronald Lu & Partners (HK) Ltd. 呂元祥建築師事務所(香港)有限公司
CLIENT: 信和置業有限公司 Sino Land Company Limited

B.D. REF :

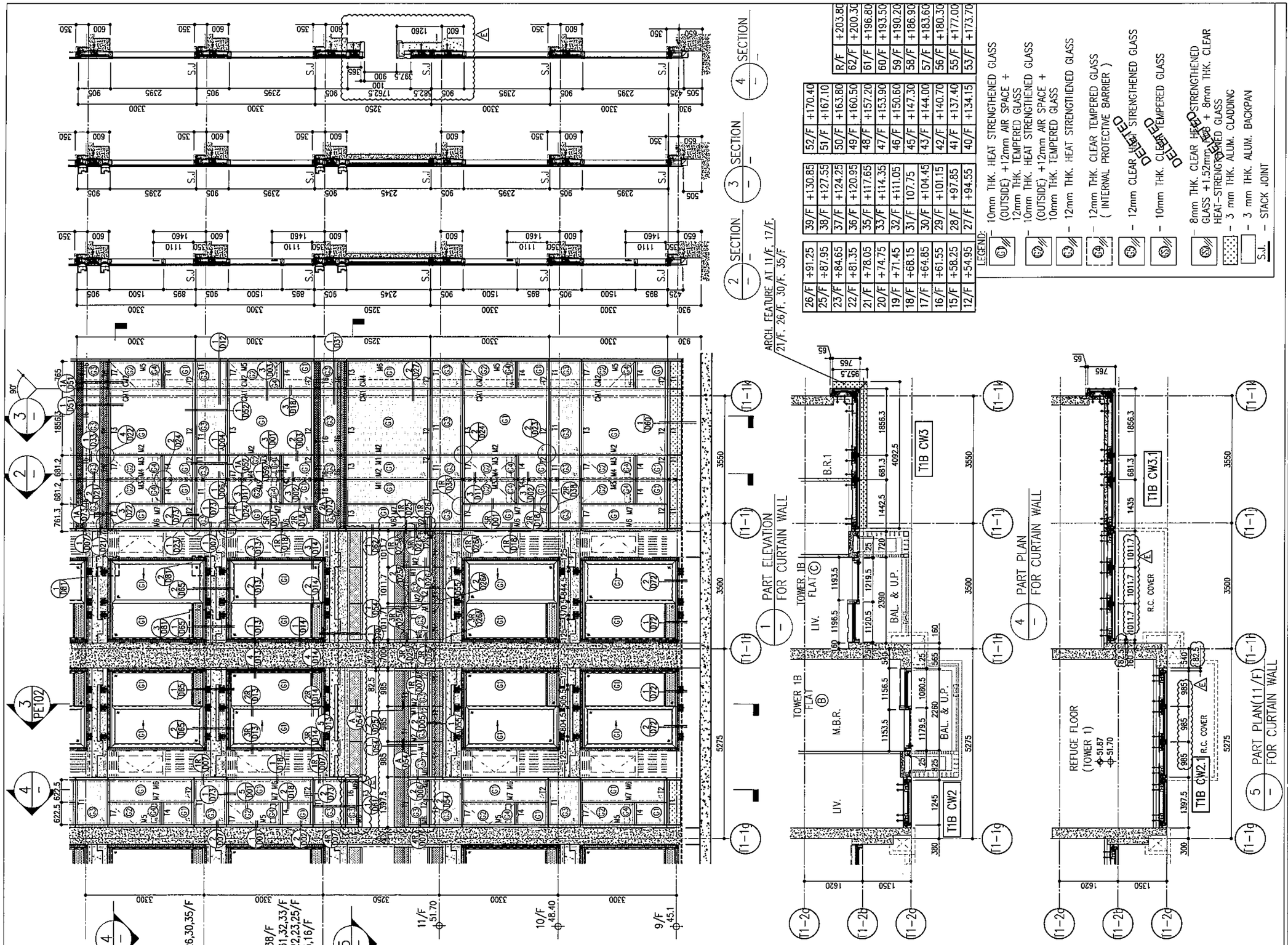

R/F	+203.80
62/F	+200.30
61/F	+196.80
60/F	+193.50
59/F	+190.20
58/F	+186.90
57/F	+183.60
56/F	+180.30
55/F	+177.00
53/F	+173.70

52/F	+170.40
51/F	+167.10
50/F	+163.80
49/F	+160.50
48/F	+157.20
47/F	+153.90
46/F	+150.60
45/F	+147.30
43/F	+144.00
42/F	+140.70
41/F	+137.40
40/F	+134.15

39/F	+130.85
38/F	+127.55
37/F	+124.25
36/F	+120.95
35/F	+117.65
33/F	+114.35
32/F	+111.05
31/F	107.75
30/F	+104.45
29/F	+101.15
28/F	+97.85
27/F	+94.55

26/F	+91.25
25/F	+87.95
23/F	+84.65
22/F	+81.35
21/F	+78.05
20/F	+74.75
19/F	+71.45
18/F	+68.15
17/F	+64.85
16/F	+61.55
15/F	+58.25
12/F	+54.95

LEGEND:
- 10mm THK. HEAT STRENGTHENED GLASS (OUTSIDE) +12mm AIR SPACE + 12mm THK. TEMPERED GLASS
- 10mm THK. HEAT STRENGTHENED GLASS (OUTSIDE) +12mm AIR SPACE + 10mm THK. TEMPERED GLASS
- 12mm THK. HEAT STRENGTHENED GLASS
- 12mm THK. CLEAR TEMPERED GLASS (INTERNAL PROTECTIVE BARRIER)
- 12mm CLEAR HEAT STRENGTHENED GLASS
- 10mm THK. CLEAR TEMPERED GLASS
- 8mm THK. CLEAR HEAT STRENGTHENED GLASS +1.52mm PVB + 8mm THK. CLEAR HEAT-STRENGTHENED GLASS
- 3 mm THK. ALUM. CLADDING
- 3 mm THK. ALUM. BACKPAN
- S.J. – STACK JOINT

B.D. REF :

CLIENT :
信和置業有限公司
Sino Land Company Limited

ARCHITECT :
ronald lu & partners
Architects · Planners · Interior Designers
Ronald Lu & Partners (HK) Ltd.
呂元祥建築師事務所(香港)有限公司

MAIN CONTRACTOR :
Gammon

STRUCTURAL ENGINEER :
AECOM

FACADE CONSULTANT:
AECOM

NOTE :
1. ALL DIMENSIONS ARE IN mm.
2. ALL ELEVATIONS ARE VIEWED FROM OUTSIDE.
3. ALL DIMENSIONS TO BE VERIFIED ON SITE BEFORE FABRICATION.

LEGEND :
- X1 — DETAIL MARK NO.
- X001 — REFER SHEET NO.

1. F.F.L. --- FINISHED FLOOR LEVEL
2. S.F.L. --- STRUCTURAL FLOOR LEVEL
3. (R) --- REVERSED DETAIL

NO.	DATE	REVISED	BY
E	23/05/22	REVISED AS PER COMMENTS	LS
D	06/04/22	REVISED AS PER COMMENTS	LS
C	24/01/22	REVISED AS PER COMMENTS	LS
B	20/12/21	REVISED AS PER COMMENTS	LS
A	03/12/21	REVISED AS PER COMMENTS	LS

JOB NO. : J-858

PROJECT :
PROPOSED RESIDENTIAL DEVELOPMENT AT TKOTL 70RP, PHASE 11, LOHAS PARK TSEUNG KWAN O, N.T.

TITLE :
TYPICAL FLOOR PARTIAL ELEVATION & SECTION, PLAN FOR CURTAIN WALL (TOWER 1)

DATE : 22-OCT-21 | SCALE : 1:50(A1)

DRAWN BY : | CHECKED BY :

美特鋁質有限公司
MIDI ALUMINIUM FABRICATOR LTD.
Units 6-8, Sunray Industrial Centre, 1/F
610 Cha Kwo Ling Road, Kowloon
Tel:23489211-4 Fax:(852)27727666

DWG NO. : J858-CW-PE103 | REV. : E

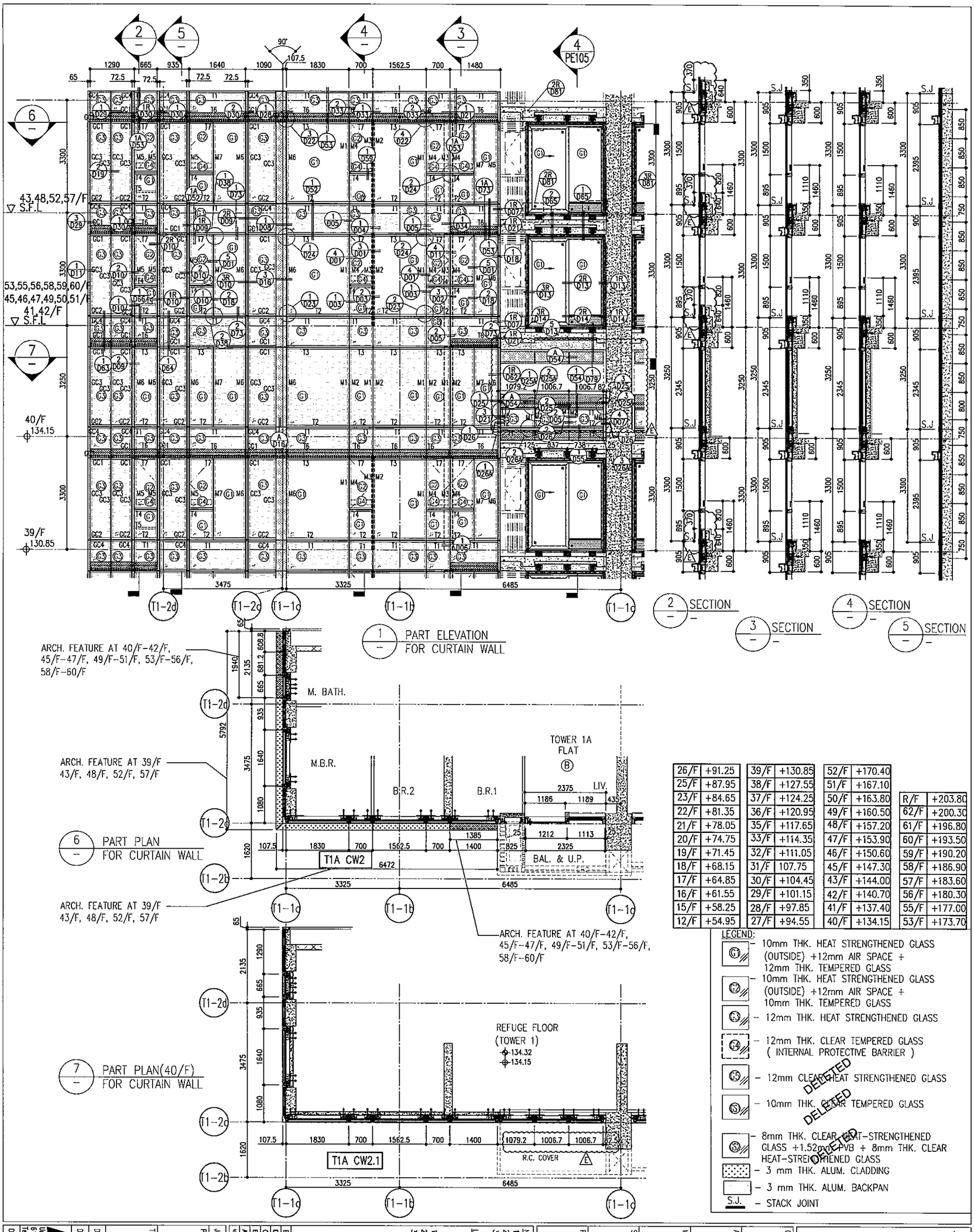

1 PART ELEVATION FOR CURTAIN WALL

2 SECTION

3 SECTION

4 SECTION

5 SECTION

6 PART PLAN FOR CURTAIN WALL

7 PART PLAN(40/F) FOR CURTAIN WALL

26/F	+91.25	39/F	+130.85	52/F	+170.40	R/F	+203.80
25/F	+87.95	38/F	+127.55	51/F	+167.10	62/F	+200.30
23/F	+84.65	37/F	+124.25	50/F	+163.80	61/F	+196.80
22/F	+81.35	36/F	+120.95	49/F	+160.50	60/F	+193.50
21/F	+78.05	35/F	+117.65	48/F	+157.20	59/F	+190.20
20/F	+74.75	33/F	+114.35	47/F	+153.90	58/F	+186.90
19/F	+71.45	32/F	+111.05	46/F	+150.60	57/F	+183.60
18/F	+68.15	31/F	107.75	45/F	+147.30	56/F	+180.30
17/F	+64.85	30/F	+104.45	43/F	+144.00	55/F	+177.00
16/F	+61.55	29/F	+101.15	42/F	+140.70	53/F	+173.70
15/F	+58.25	28/F	+97.85	41/F	+137.40		
12/F	+54.95	27/F	+94.55	40/F	+134.15		

LEGEND:

- G1 – 10mm THK. HEAT STRENGTHENED GLASS (OUTSIDE) +12mm AIR SPACE + 12mm THK. TEMPERED GLASS
- G2 – 10mm THK. HEAT STRENGTHENED GLASS (OUTSIDE) +12mm AIR SPACE + 10mm THK. TEMPERED GLASS
- G3 – 12mm THK. HEAT STRENGTHENED GLASS
- G4 – 12mm THK. CLEAR TEMPERED GLASS (INTERNAL PROTECTIVE BARRIER)
- G5 – 12mm CLEAR HEAT STRENGTHENED GLASS DELETED
- G6 – 10mm THK. CLEAR TEMPERED GLASS DELETED
- G7 – 8mm THK. CLEAR HEAT-STRENGTHENED GLASS +1.52mm PVB + 8mm THK. CLEAR HEAT-STRENGTHENED GLASS DELETED
- 3 mm THK. ALUM. CLADDING
- 3 mm THK. ALUM. BACKPAN
- S.J. – STACK JOINT

NOTE:
1. ALL DIMENSIONS ARE IN mm.
2. ALL ELEVATIONS ARE MEMED FROM OUTSIDE.
3. ALL DIMENSIONS TO BE VERIFIED ON SITE BEFORE FABRICATION.

LEGEND:
- X1 / X001 – DETAIL MARK NO. / REFER SHEET NO.
1. F.F.L. --FINISHED FLOOR LEVEL
2. S.F.L. --STRUCTURAL FLOOR LEVEL
3. (R) --REVERSED DETAIL

NO.	DATE	REMARKS	BY
E	23/05/22	REMISED AS PER COMMENTS	LS
D	06/04/22	REMISED AS PER COMMENTS	LS
C	24/01/22	REMISED AS PER COMMENTS	LS
B	20/12/21	REMISED AS PER COMMENTS	LS
A	03/12/21	REMISED AS PER COMMENTS	LS

JOB NO. : J-858

PROJECT : PROPOSED RESIDENTIAL DEVELOPMENT AT TKOTL 70RP, PHASE 11, LOHAS PARK TSEUNG KWAN O, N.T.

TITLE : TYPICAL FLOOR PARTIAL ELEVATION & SECTION, PLAN FOR CURTAIN WALL (TOWER 1)

DATE : 22-OCT-21 | SCALE : 1:50(A1)

DRAWN BY : | CHECKED BY :

DWG NO. : J858-CW-PE104 | REV. : E

美特鋁質有限公司 MIDI ALUMINIUM FABRICATION LTD.
Units 6-8, Sunray Industrial Centre, 1/F
610 Cha Kwo Ling Road, Kowloon
Tel:23489211-4 Fax:(852)27727666

B.D. REF. :

CLIENT : 信和置業有限公司 Sino Land Company Limited

ARCHITECT : ronald lu & partners 呂元祥建築師事務所(香港)有限公司 Ronald Lu & Partners (HK) Ltd.

MAIN CONTRACTOR : Gammon

STRUCTURAL ENGINEER : AECOM

FACADE CONSULTANT : AECOM

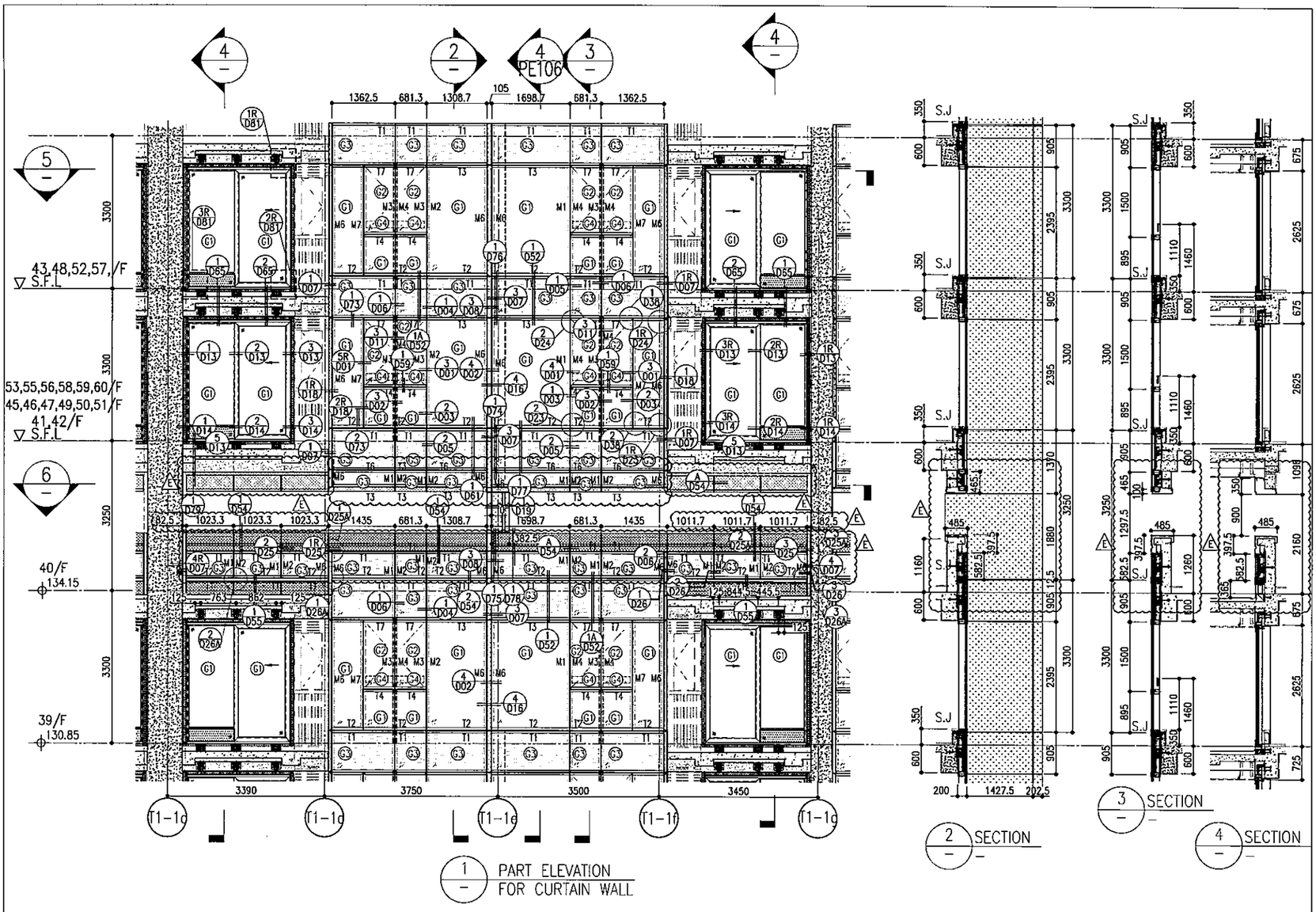

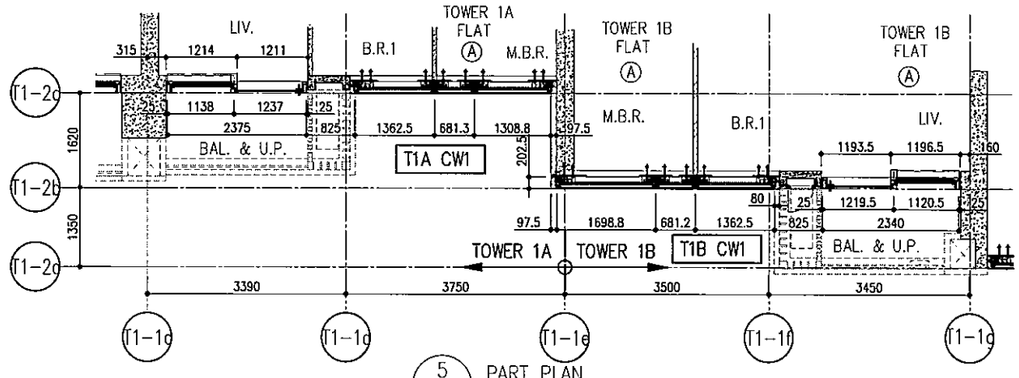

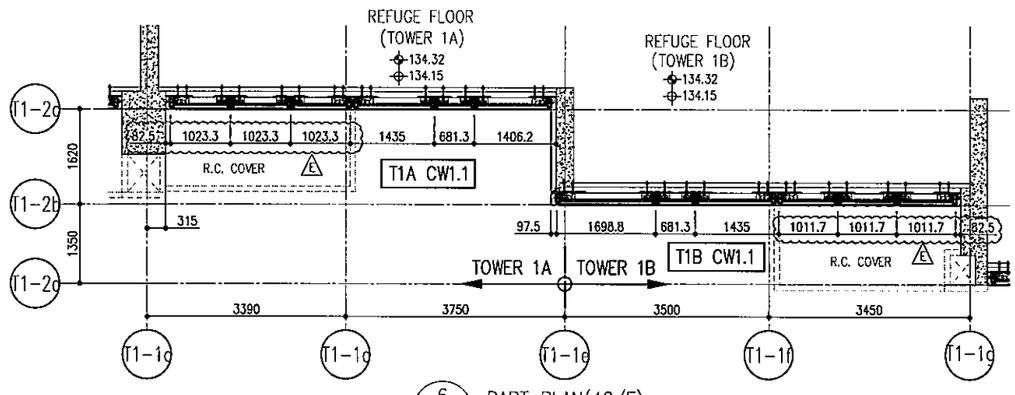

26/F	+91.25	39/F	+130.85	52/F	+170.40		
25/F	+87.95	38/F	+127.55	51/F	+167.10		
23/F	+84.65	37/F	+124.25	50/F	+163.80	R/F	+203.80
22/F	+81.35	36/F	+120.95	49/F	+160.50	62/F	+200.30
21/F	+78.05	35/F	+117.65	48/F	+157.20	61/F	+196.80
20/F	+74.75	33/F	+114.35	47/F	+153.90	60/F	+193.50
19/F	+71.45	32/F	+111.05	46/F	+150.60	59/F	+190.20
18/F	+68.15	31/F	107.75	45/F	+147.30	58/F	+186.90
17/F	+64.85	30/F	+104.45	43/F	+144.00	57/F	+183.60
16/F	+61.55	29/F	+101.15	42/F	+140.70	56/F	+180.30
15/F	+58.25	28/F	+97.85	41/F	+137.40	55/F	+177.00
12/F	+54.95	27/F	+94.55	40/F	+134.15	53/F	+173.70

LEGEND:

- G1 – 10mm THK. HEAT STRENGTHENED GLASS (OUTSIDE) +12mm AIR SPACE + 12mm THK. TEMPERED GLASS
- G2 – 10mm THK. HEAT STRENGTHENED GLASS (OUTSIDE) +12mm AIR SPACE + 10mm THK. TEMPERED GLASS
- G3 – 12mm THK. HEAT STRENGTHENED GLASS
- G4 – 12mm THK. CLEAR TEMPERED GLASS (INTERNAL PROTECTIVE BARRIER)
- G5 – 12mm CLEAR HEAT STRENGTHENED GLASS DELETED
- G6 – 10mm THK. CLEAR TEMPERED GLASS DELETED
- G7 – 8mm THK. CLEAR HEAT-STRENGTHENED GLASS +1.52mm PVB + 8mm THK. CLEAR HEAT-STRENGTHENED GLASS DELETED
- 3 mm THK. ALUM. CLADDING
- 3 mm THK. ALUM. BACKPAN
- S.J. – STACK JOINT

B.D. REF :

CLIENT :
信和置業有限公司
Sino Land Company Limited

ARCHITECT :
ronald lu & partners
Ronald Lu & Partners (HK) Ltd.
呂元祥建築師事務所(香港)有限公司

MAIN CONTRACTOR :
Gammon

STRUCTURAL ENGINEER :
AECOM

FACADE CONSULTANT :
AECOM

NOTE :
1. ALL DIMENSIONS ARE IN mm.
2. ALL ELEVATIONS ARE VIEWED FROM OUTSIDE.
3. ALL DIMENSIONS TO BE VERIFIED ON SITE BEFORE FABRICATION.

LEGEND :
- X1 / X00 – DETAIL MARK NO. / REFER SHEET NO.
- 1. F.F.L. – FINISHED FLOOR LEVEL
- 2. S.F.L. – STRUCTURAL FLOOR LEVEL
- 3. (28) – REVERSED DETAIL

NO.	DATE	REMARKS	BY
E	23/06/22	REVISED AS PER COMMENTS	LS
D	06/04/22	REVISED AS PER COMMENTS	LS
C	24/01/22	REVISED AS PER COMMENTS	LS
B	20/12/21	REVISED AS PER COMMENTS	LS
A	03/12/21	REVISED AS PER COMMENTS	LS

JOB NO. : J-858

PROJECT :
PROPOSED RESIDENTIAL DEVELOPMENT
AT TKOL 70RP, PHASE 11, LOHAS PARK
TSEUNG KWAN O, N.T.

TITLE :
TYPICAL FLOOR PARTIAL ELEVATION & SECTION, PLAN FOR CURTAIN WALL (TOWER 1)

DATE : 22-OCT-21 | SCALE : 1:50(A1)

DRAWN BY : | CHECKED BY :

美特鋁廠有限公司
MIDI ALUMINIUM FABRICATOR LTD.
Units 6-8, Sunroy Industrial Centre, 1/F
610 Cha Kwo Ling Road, Kowloon
Tel:23489211-4 Fax:(852)27727866

DWG NO. : J858-CW-PE105 | REV. : E

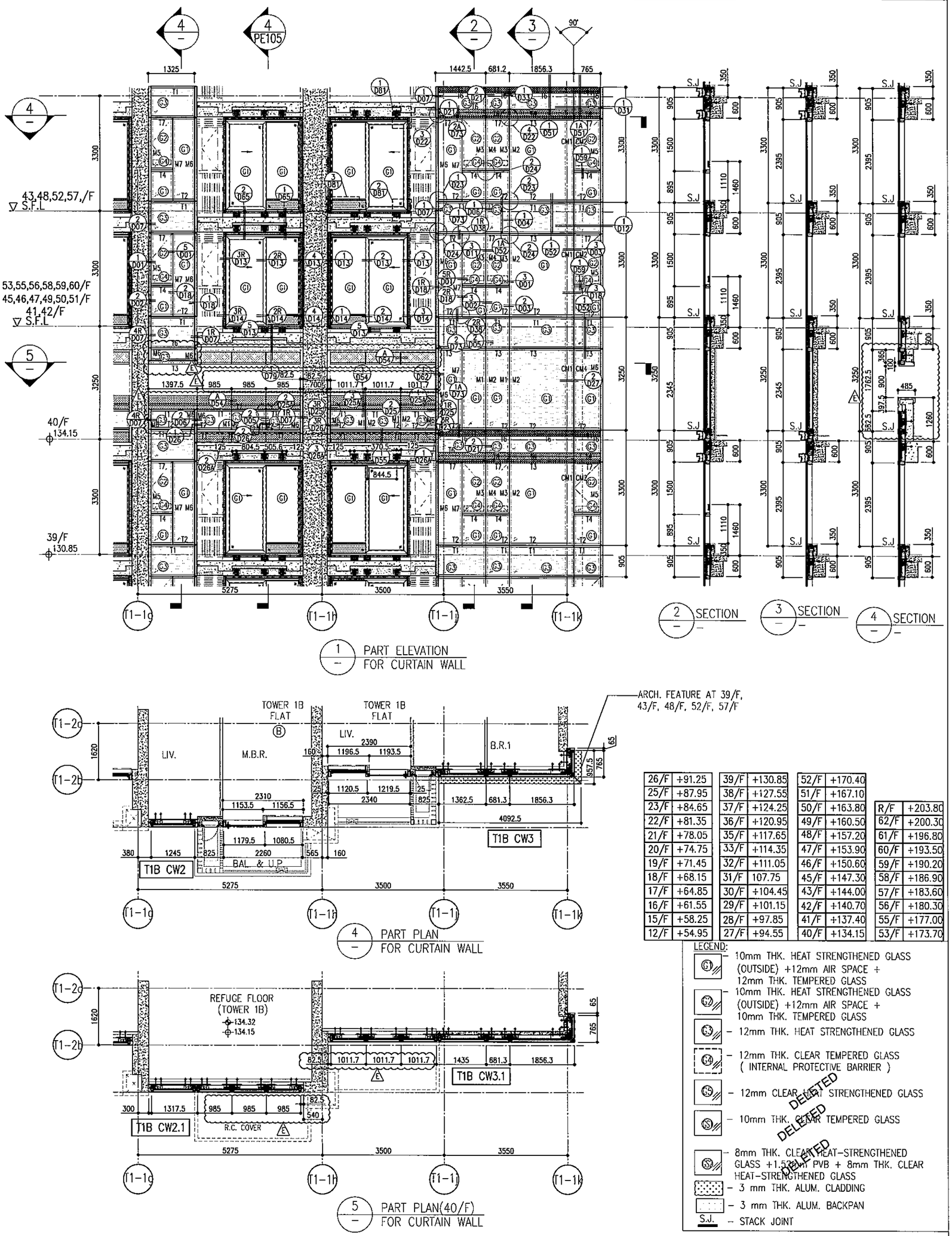

26/F	+91.25	39/F	+130.85	52/F	+170.40		
25/F	+87.95	38/F	+127.55	51/F	+167.10		
23/F	+84.65	37/F	+124.25	50/F	+163.80	R/F	+203.80
22/F	+81.35	36/F	+120.95	49/F	+160.50	62/F	+200.30
21/F	+78.05	35/F	+117.65	48/F	+157.20	61/F	+196.80
20/F	+74.75	33/F	+114.35	47/F	+153.90	60/F	+193.50
19/F	+71.45	32/F	+111.05	46/F	+150.60	59/F	+190.20
18/F	+68.15	31/F	107.75	45/F	+147.30	58/F	+186.90
17/F	+64.85	30/F	+104.45	43/F	+144.00	57/F	+183.60
16/F	+61.55	29/F	+101.15	42/F	+140.70	56/F	+180.30
15/F	+58.25	28/F	+97.85	41/F	+137.40	55/F	+177.00
12/F	+54.95	27/F	+94.55	40/F	+134.15	53/F	+173.70

LEGEND:

- G1 – 10mm THK. HEAT STRENGTHENED GLASS (OUTSIDE) +12mm AIR SPACE + 12mm THK. TEMPERED GLASS
- G2 – 10mm THK. HEAT STRENGTHENED GLASS (OUTSIDE) +12mm AIR SPACE + 10mm THK. TEMPERED GLASS
- G3 – 12mm THK. HEAT STRENGTHENED GLASS
- G4 – 12mm THK. CLEAR TEMPERED GLASS (INTERNAL PROTECTIVE BARRIER)
- G5 – 12mm CLEAR HEAT STRENGTHENED GLASS DELETED
- S1 – 10mm THK. CLEAR TEMPERED GLASS DELETED
- S2 – 8mm THK. CLEAR HEAT-STRENGTHENED GLASS +1.52mm PVB + 8mm THK. CLEAR HEAT-STRENGTHENED GLASS DELETED
- 3 mm THK. ALUM. CLADDING
- 3 mm THK. ALUM. BACKPAN
- S.J. – STACK JOINT

NOTE:
1. ALL DIMENSIONS ARE IN mm.
2. ALL ELEVATIONS ARE VIEWED FROM OUTSIDE.
3. ALL DIMENSIONS TO BE VERIFIED ON SITE BEFORE FABRICATION.

LEGEND:
- X1 / X001 — DETAIL MARK NO. / REFER SHEET NO.
1. F.F.L. --FINISHED FLOOR LEVEL
2. S.F.L. --STRUCTURAL FLOOR LEVEL
3. 25 --REVERSED DETAIL

NO.	DATE	REVISED	BY
E	23/05/22	REVISED AS PER COMMENTS	LS
D	06/04/22	REVISED AS PER COMMENTS	LS
C	24/01/22	REVISED AS PER COMMENTS	LS
B	20/12/21	REVISED AS PER COMMENTS	LS
A	03/12/21	REVISED AS PER COMMENTS	LS

JOB NO. : J-858

PROJECT : PROPOSED RESIDENTIAL DEVELOPMENT AT TKOTL 70RP, PHASE 11, LOHAS PARK TSEUNG KWAN O, N.T.

TITLE : TYPICAL FLOOR PARTIAL ELEVATION & SECTION, PLAN FOR CURTAIN WALL (TOWER 1)

DATE : 22-OCT-21 | SCALE : 1:50(A1)

DRAWN BY : | CHECKED BY :

DWG NO. : J858-CW-PE106 | REV. : E

美特鋁質有限公司 MIDI ALUMINIUM FABRICATOR LTD.
Units 6-8, Sunray Industrial Centre, 1/F
610 Cha Kwo Ling Road, Kowloon
Tel:23489211-4 Fax:(852)27727666

CLIENT : 信和置業有限公司 Sino Land Company Limited

ARCHITECT : ronald lu & partners Architects Planners Interior Designers 呂元祥建築師事務所(香港)有限公司 Ronald Lu & Partners (HK) Ltd.

MAIN CONTRACTOR : Gammon

STRUCTURAL ENGINEER : AECOM

FACADE CONSULTANT : AECOM

B.D. REF :

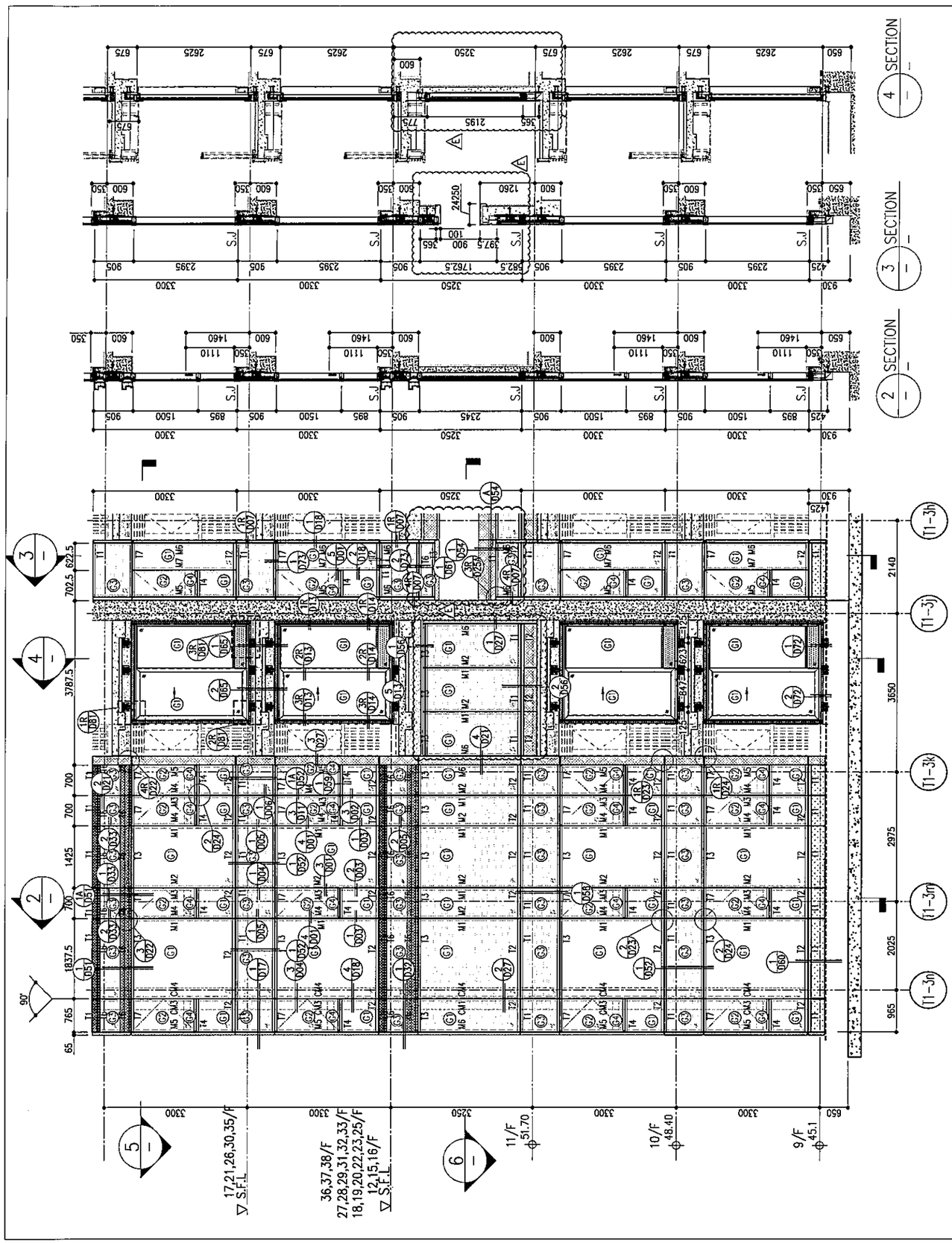

26/F	+91.25
25/F	+87.95
23/F	+84.65
22/F	+81.35
21/F	+78.05
20/F	+74.75
19/F	+71.45
18/F	+68.15
17/F	+64.85
16/F	+61.55
15/F	+58.25
12/F	+54.95

39/F	+130.85
38/F	+127.55
37/F	+124.25
36/F	+120.95
35/F	+117.65
33/F	+114.35
32/F	+111.05
31/F	107.75
30/F	+104.45
29/F	+101.15
28/F	+97.85
27/F	+94.55

52/F	+170.40
51/F	+167.10
50/F	+163.80
49/F	+160.50
48/F	+157.20
47/F	+153.90
46/F	+150.60
45/F	+147.30
43/F	+144.00
42/F	+140.70
41/F	+137.40
40/F	+134.15

R/F	+203.80
62/F	+200.30
61/F	+196.80
60/F	+193.50
59/F	+190.20
58/F	+186.90
57/F	+183.60
56/F	+180.30
55/F	+177.00
53/F	+173.70

LEGEND:
- ⑤ 10mm THK. HEAT STRENGTHENED GLASS (OUTSIDE) +12mm AIR SPACE + 12mm THK. TEMPERED GLASS
- ⑫ 10mm THK. HEAT STRENGTHENED GLASS (OUTSIDE) +12mm AIR SPACE + 10mm THK. TEMPERED GLASS
- ③ – 12mm THK. HEAT STRENGTHENED GLASS
- ⑧ – 12mm THK. CLEAR TEMPERED GLASS (INTERNAL PROTECTIVE BARRIER) DELETED
- ⑤ – 12mm CLEAR HEAT STRENGTHENED GLASS DELETED
- ⑤ – 10mm THK. CLEAR TEMPERED GLASS
- ⑱ – 8mm THK. CLEAR HEAT-STRENGTHENED GLASS +1.52mm PVB + 8mm THK. CLEAR HEAT-STRENGTHENED GLASS
- – 3 mm THK. ALUM. CLADDING
- – 3 mm THK. ALUM. BACKPAN
- S.J. – STACK JOINT

B.D. REF :

CLIENT :
信和置業有限公司
Sino Land Company Limited

ARCHITECT :
ronald lu & partners
Architects · Planners · Interior Designers
Ronald Lu & Partners (HK) Ltd.
呂元祥建築師事務所(香港)有限公司

MAIN CONTRACTOR :
Gammon

STRUCTURAL ENGINEER :
AECOM

FACADE CONSULTANT:
AECOM

NOTE :
1. ALL DIMENSIONS ARE IN mm.
2. ALL ELEVATIONS ARE VIEWED FROM OUTSIDE.
3. ALL DIMENSIONS TO BE VERIFIED ON SITE BEFORE FABRICATION.

LEGEND :
- X1 — DETAIL MARK NO.
- X001 — REFER SHEET NO.

1. F.F.L. --FINISHED FLOOR LEVEL
2. S.F.L. --STRUCTURAL FLOOR LEVEL
3. (R) --REVERSED DETAIL

NO.	DATE	REVISED	BY
E	23/05/22	REVISED AS PER COMMENTS	LS
D	06/04/22	REVISED AS PER COMMENTS	LS
C	24/01/22	REVISED AS PER COMMENTS	LS
B	20/12/21	REVISED AS PER COMMENTS	LS
A	03/12/21	REVISED AS PER COMMENTS	LS

JOB NO. : J-858

PROJECT :
PROPOSED RESIDENTIAL DEVELOPMENT AT TKOTL 70RP, PHASE 11, LOHAS PARK TSEUNG KWAN O, N.T.

TITLE :
TYPICAL FLOOR PARTIAL ELEVATION & SECTION, PLAN FOR CURTAIN WALL (TOWER 1)

DATE : 22-OCT-21 | SCALE : 1:50(A1)

DRAWN BY : | CHECKED BY :

美特鋁質有限公司
MIDI ALUMINUM FABRICATOR LTD.
Units 6-8, Sunray Industrial Centre, 1/F
610 Cha Kwo Ling Road, Kowloon
Tel:23489211-4 Fax:(852)27727665

DWG NO. : J858-CW-PE107 | REV. : E

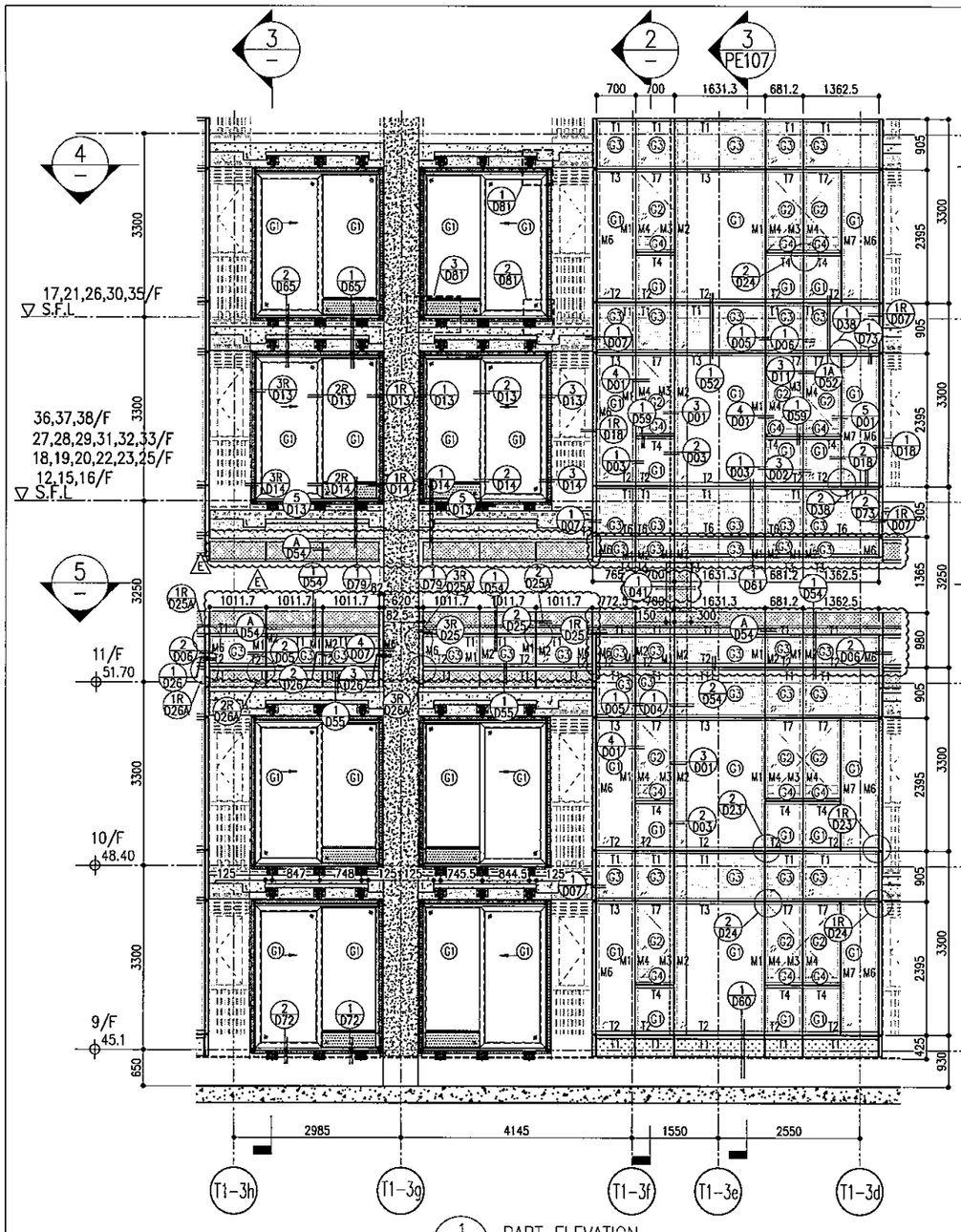

1 PART ELEVATION FOR CURTAIN WALL

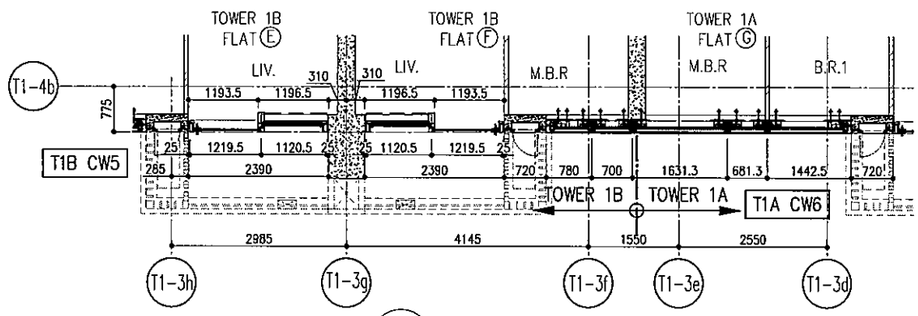

4 PART PLAN FOR CURTAIN WALL

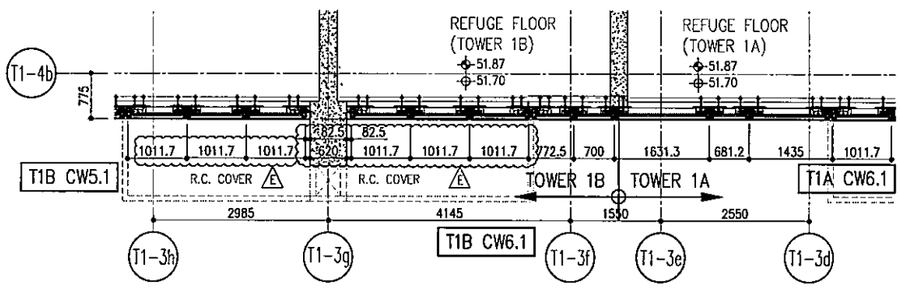

5 PART PLAN(11/F) FOR CURTAIN WALL

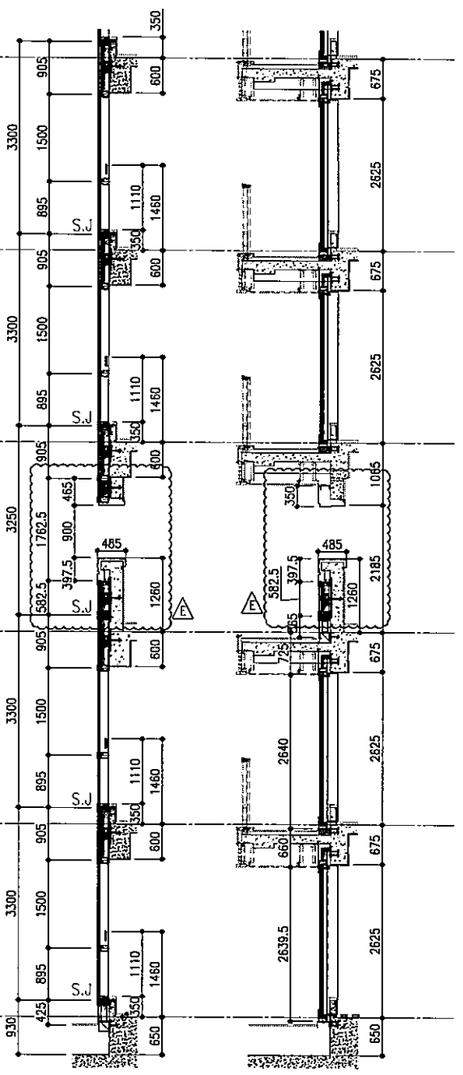

2 SECTION

3 SECTION

26/F	+91.25	39/F	+130.85	52/F	+170.40		
25/F	+87.95	38/F	+127.55	51/F	+167.10		
23/F	+84.65	37/F	+124.25	50/F	+163.80	R/F	+203.80
22/F	+81.35	36/F	+120.95	49/F	+160.50	62/F	+200.30
21/F	+78.05	35/F	+117.65	48/F	+157.20	61/F	+196.80
20/F	+74.75	33/F	+114.35	47/F	+153.90	60/F	+193.50
19/F	+71.45	32/F	+111.05	46/F	+150.60	59/F	+190.20
18/F	+68.15	31/F	107.75	45/F	+147.30	58/F	+186.90
17/F	+64.85	30/F	+104.45	43/F	+144.00	57/F	+183.60
16/F	+61.55	29/F	+101.15	42/F	+140.70	56/F	+180.30
15/F	+58.25	28/F	+97.85	41/F	+137.40	55/F	+177.00
12/F	+54.95	27/F	+94.55	40/F	+134.15	53/F	+173.70

LEGEND:

- G1 – 10mm THK. HEAT STRENGTHENED GLASS (OUTSIDE) +12mm AIR SPACE + 12mm THK. TEMPERED GLASS
- G2 – 10mm THK. HEAT STRENGTHENED GLASS (OUTSIDE) +12mm AIR SPACE + 10mm THK. TEMPERED GLASS
- G3 – 12mm THK. HEAT STRENGTHENED GLASS
- G4 – 12mm THK. CLEAR TEMPERED GLASS (INTERNAL PROTECTIVE BARRIER)
- G5 – 12mm CLEAR HEAT STRENGTHENED GLASS DELETED
- G6 – 10mm THK. CLEAR TEMPERED GLASS DELETED
- G7 – 8mm THK. CLEAR HEAT-STRENGTHENED GLASS +1.52mm PVB + 8mm THK. CLEAR HEAT-STRENGTHENED GLASS DELETED
- 3 mm THK. ALUM. CLADDING
- 3 mm THK. ALUM. BACKPAN
- S.J. – STACK JOINT

NOTE:
1. ALL DIMENSIONS ARE IN mm.
2. ALL ELEVATIONS ARE VIEWED FROM OUTSIDE.
3. ALL DIMENSIONS TO BE VERIFIED ON SITE BEFORE FABRICATION.

LEGEND:
- X1 / X001 – DETAIL MARK NO. / REFER SHEET NO.
- F.F.L. – FINISHED FLOOR LEVEL
- S.F.L. – STRUCTURAL FLOOR LEVEL
- R – REVERSED DETAIL

NO	DATE	REVISED	BY
E	23/05/22	REVISED AS PER COMMENTS	LS
D	06/04/22	REVISED AS PER COMMENTS	LS
C	16/02/22	REVISED AS PER COMMENTS	LS
B	20/12/21	REVISED AS PER COMMENTS	LS
A	02/12/21	REVISED AS PER COMMENTS	LS

JOB NO. : J-858

PROJECT :
PROPOSED RESIDENTIAL DEVELOPMENT
AT TKOTL 70RP, PHASE 11, LOHAS PARK
TSEUNG KWAN O, N.T.

TITLE :
TYPICAL FLOOR PARTIAL
ELEVATION & SECTION, PLAN
FOR CURTAIN WALL (TOWER 1)

DATE : 22-OCT-21 | SCALE : 1:50(A1)

DRAWN BY : | CHECKED BY :

DWG NO. : J858-CW-PE108 | REV. : E

FACADE CONSULTANT: AECOM

STRUCTURAL ENGINEER: AECOM

MAIN CONTRACTOR: Gammon

ARCHITECT: ronald lu & partners / Ronald Lu & Partners (HK) Ltd. 呂元祥建築師事務所(香港)有限公司

CLIENT: 信和置業有限公司 Sino Land Company Limited

B.D. REF :

美特鋁質有限公司 MIDI ALUMINIUM FABRICATOR LTD.
Units 6~8, Sunray Industrial Centre, 1/F
610 Cho Kwo Ling Road, Kowloon
Tel:23489211~4 Fax:(852)27727666

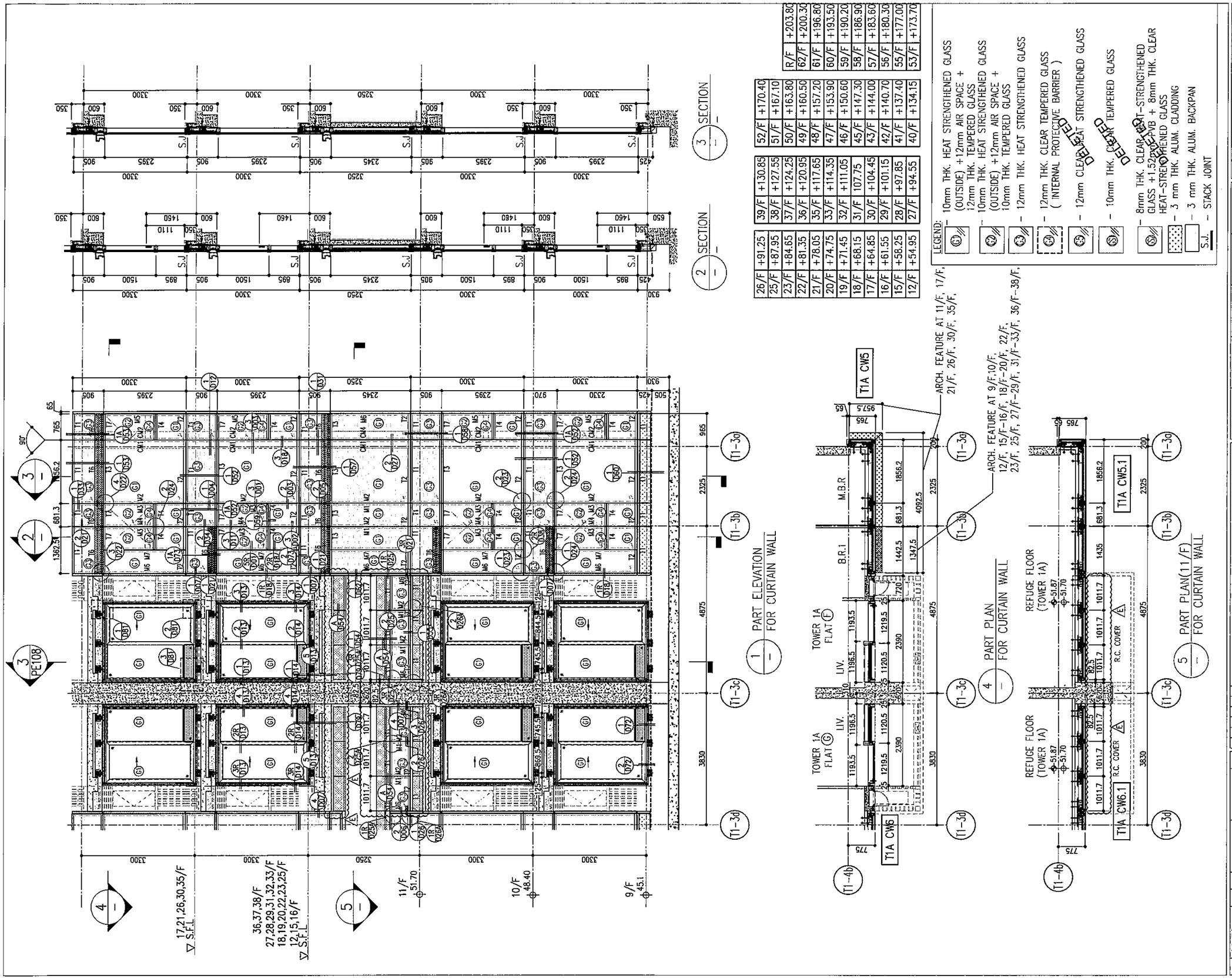

R/F	+203.80
62/F	+200.30
61/F	+196.80
60/F	+193.50
59/F	+190.20
58/F	+186.90
57/F	+183.60
56/F	+180.30
55/F	+177.00
53/F	+173.70

52/F	+170.40
51/F	+167.10
50/F	+163.80
49/F	+160.50
48/F	+157.20
47/F	+153.90
46/F	+150.60
45/F	+147.30
43/F	+144.00
42/F	+140.70
41/F	+137.40
40/F	+134.15

39/F	+130.85
38/F	+127.55
37/F	+124.25
36/F	+120.95
35/F	+117.65
33/F	+114.35
32/F	+111.05
31/F	107.75
30/F	+104.45
29/F	+101.15
28/F	+97.85
27/F	+94.55

26/F	+91.25
25/F	+87.95
23/F	+84.65
22/F	+81.35
21/F	+78.05
20/F	+74.75
19/F	+71.45
18/F	+68.15
17/F	+64.85
16/F	+61.55
15/F	+58.25
12/F	+54.95

B.D. REF :

CLIENT :
信和置業有限公司
Sino Land Company Limited

ARCHITECT :
ronald lu & partners
Architects . Planners . Interior Designers
Ronald Lu & Partners (HK) Ltd.
呂元祥建築師事務所(香港)有限公司

MAIN CONTRACTOR :
Gammon

STRUCTURAL ENGINEER :
AECOM

FACADE CONSULTANT:
AECOM

NOTE :
1. ALL DIMENSIONS ARE IN mm.
2. ALL ELEVATIONS ARE VIEWED FROM OUTSIDE.
3. ALL DIMENSIONS TO BE VERIFIED ON SITE BEFORE FABRICATION.

LEGEND :
X1 / X001 — DETAIL MARK NO. / REFER SHEET NO.

1. F.F.L. --FINISHED FLOOR LEVEL
2. S.F.L. --STRUCTURAL FLOOR LEVEL
3. (R) --REVERSED DETAIL

NO.	DATE	REVISED	BY
E	23/05/22	REVISED AS PER COMMENTS	LS
D	06/04/22	REVISED AS PER COMMENTS	LS
C	16/02/22	REVISED AS PER COMMENTS	LS
B	20/12/21	REVISED AS PER COMMENTS	LS
A	03/12/21	REVISED AS PER COMMENTS	LS

JOB NO. : J-858

PROJECT :
PROPOSED RESIDENTIAL DEVELOPMENT
AT TKOTL 70RP, PHASE 11, LOHAS PARK
TSEUNG KWAN O, N.T.

TITLE :
TYPICAL FLOOR PARTIAL ELEVATION & SECTION, PLAN FOR CURTAIN WALL (TOWER 1)

DATE : 22-OCT-21 | SCALE : 1:50(A1)

DRAWN BY : | CHECKED BY :

美特鋁質有限公司
MIDI ALUMINIUM FABRICATOR LTD.
Units 6-8, Sunray Industrial Centre, 1/F
610 Cha Kwo Ling Road, Kowloon
Tel:23489211-4 Fax:(852)27727666

DWG NO. : J858-CW-PE109 | REV. : E

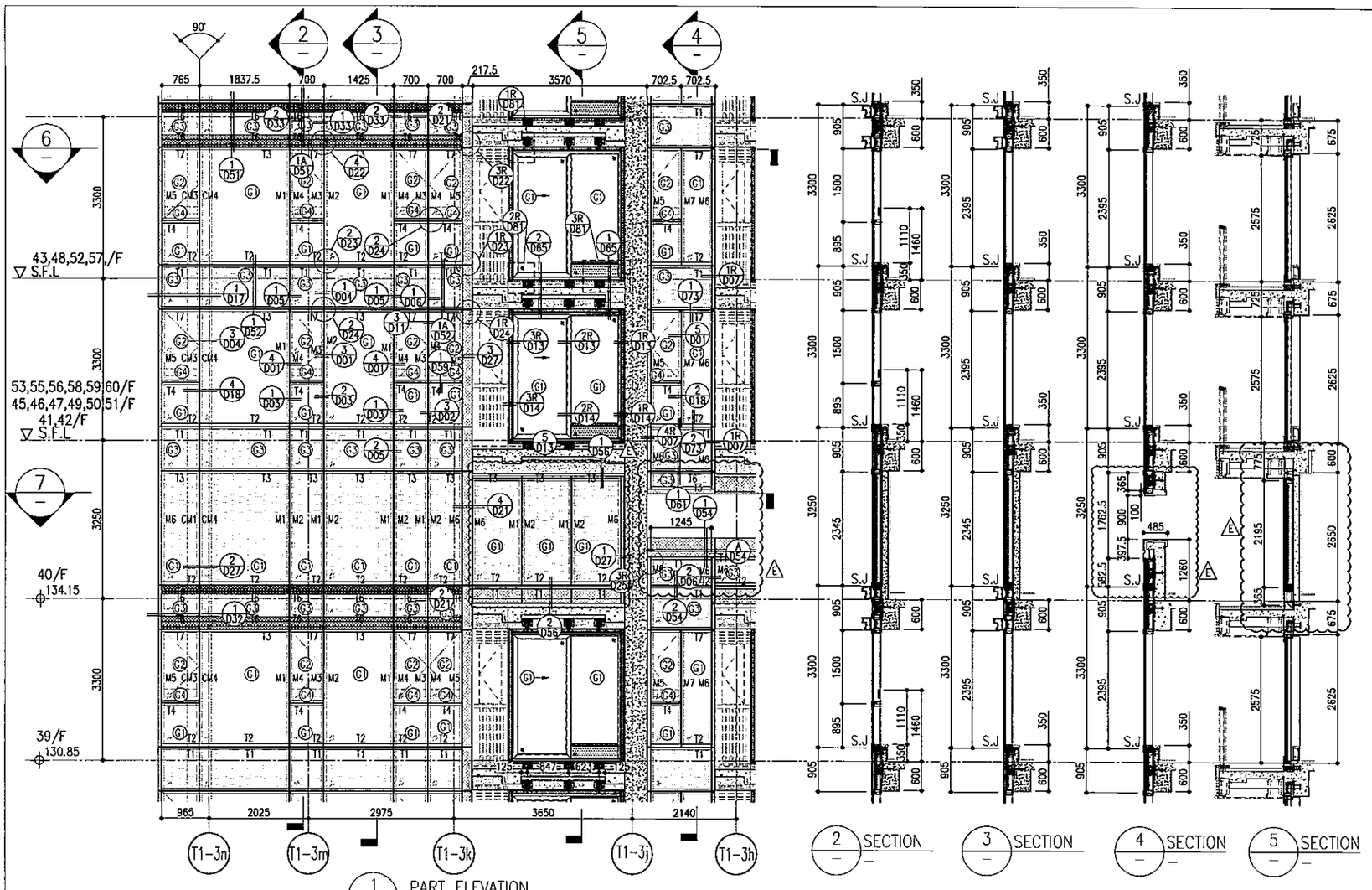

1 PART ELEVATION FOR CURTAIN WALL

2 SECTION

3 SECTION

4 SECTION

5 SECTION

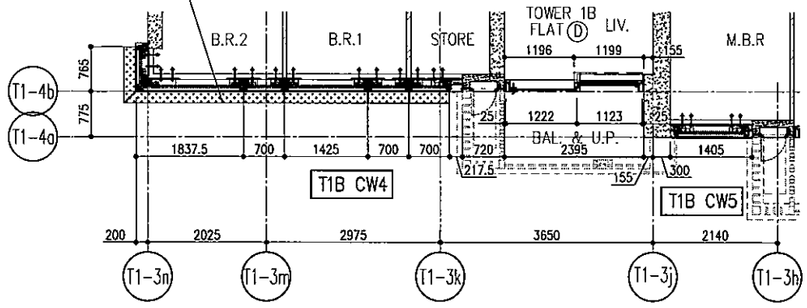

6 PART PLAN FOR CURTAIN WALL

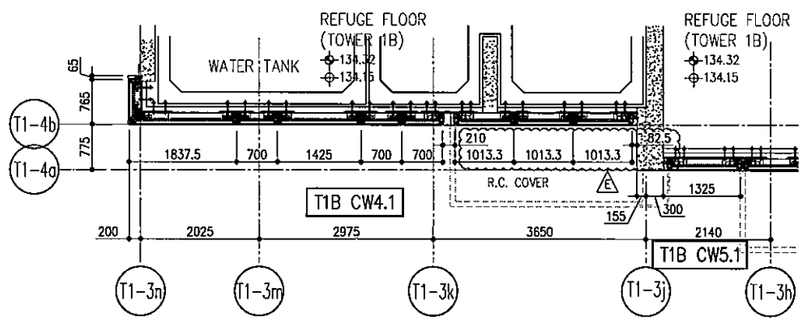

7 PART PLAN(40/F) FOR CURTAIN WALL

26/F	+91.25	39/F	+130.85	52/F	+170.40		
25/F	+87.95	38/F	+127.55	51/F	+167.10		
23/F	+84.65	37/F	+124.25	50/F	+163.80	R/F	+203.80
22/F	+81.35	36/F	+120.95	49/F	+160.50	62/F	+200.30
21/F	+78.05	35/F	+117.65	48/F	+157.20	61/F	+196.80
20/F	+74.75	33/F	+114.35	47/F	+153.90	60/F	+193.50
19/F	+71.45	32/F	+111.05	46/F	+150.60	59/F	+190.20
18/F	+68.15	31/F	107.75	45/F	+147.30	58/F	+186.90
17/F	+64.85	30/F	+104.45	43/F	+144.00	57/F	+183.60
16/F	+61.55	29/F	+101.15	42/F	+140.70	56/F	+180.30
15/F	+58.25	28/F	+97.85	41/F	+137.40	55/F	+177.00
12/F	+54.95	27/F	+94.55	40/F	+134.15	53/F	+173.70

LEGEND:

- G1 — 10mm THK. HEAT STRENGTHENED GLASS (OUTSIDE) +12mm AIR SPACE + 12mm THK. TEMPERED GLASS
- G2 — 10mm THK. HEAT STRENGTHENED GLASS (OUTSIDE) +12mm AIR SPACE + 10mm THK. TEMPERED GLASS
- G3 — 12mm THK. HEAT STRENGTHENED GLASS
- G4 — 12mm THK. CLEAR TEMPERED GLASS (INTERNAL PROTECTIVE BARRIER)
- G5 — 12mm CLEAR HEAT STRENGTHENED GLASS DELETED
- G6 — 10mm THK. CLEAR TEMPERED GLASS DELETED
- G7 — 8mm THK. CLEAR HEAT-STRENGTHENED GLASS +1.52mm PVB + 8mm THK. CLEAR HEAT-STRENGTHENED GLASS DELETED
- 3 mm THK. ALUM. CLADDING
- 3 mm THK. ALUM. BACKPAN
- S.J. — STACK JOINT

NOTE:
1. ALL DIMENSIONS ARE IN mm.
2. ALL ELEVATIONS ARE VIEWED FROM OUTSIDE.
3. ALL DIMENSIONS TO BE VERIFIED ON SITE BEFORE FABRICATION.

LEGEND:
- X1 / X057 — DETAIL MARK NO. / REFER SHEET NO.
- 1. F.F.L. — FINISHED FLOOR LEVEL
- 2. S.F.L. — STRUCTURAL FLOOR LEVEL
- 3. 28 — REVERSED DETAIL

NO.	DATE	REVISED	BY
E	23/05/22	REVISED AS PER COMMENTS	LS
D	06/04/22	REVISED AS PER COMMENTS	LS
C	16/02/22	REVISED AS PER COMMENTS	LS
B	20/12/21	REVISED AS PER COMMENTS	LS
A	03/12/21	REVISED AS PER COMMENTS	LS

JOB NO. : J-858

PROJECT : PROPOSED RESIDENTIAL DEVELOPMENT AT TKOTL 70RP, PHASE 11, LOHAS PARK TSEUNG KWAN O, N.T.

TITLE : TYPICAL FLOOR PARTIAL ELEVATION & SECTION, PLAN FOR CURTAIN WALL (TOWER 1)

DATE : 22-OCT-21 | SCALE : 1:50(A1)

DRAWN BY : | CHECKED BY :

DWG NO. : J858-CW-PE110 | REV. : E

美特鋁廠有限公司 MIDI ALUMINIUM FABRICATOR LTD.
Units 6-8, Sunray Industrial Centre, 1/F
610 Cha Kwo Ling Road, Kowloon
Tel:23489211-4 Fax:(852)27727666

B.D. REF :

CLIENT : 信和置業有限公司 Sino Land Company Limited

ARCHITECT : ronald lu & partners Architects Planners Interior Designers 呂元祥建築師事務所(香港)有限公司 Ronald Lu & Partners (HK) Ltd.

MAIN CONTRACTOR : Gammon

STRUCTURAL ENGINEER : AECOM

FACADE CONSULTANT : AECOM

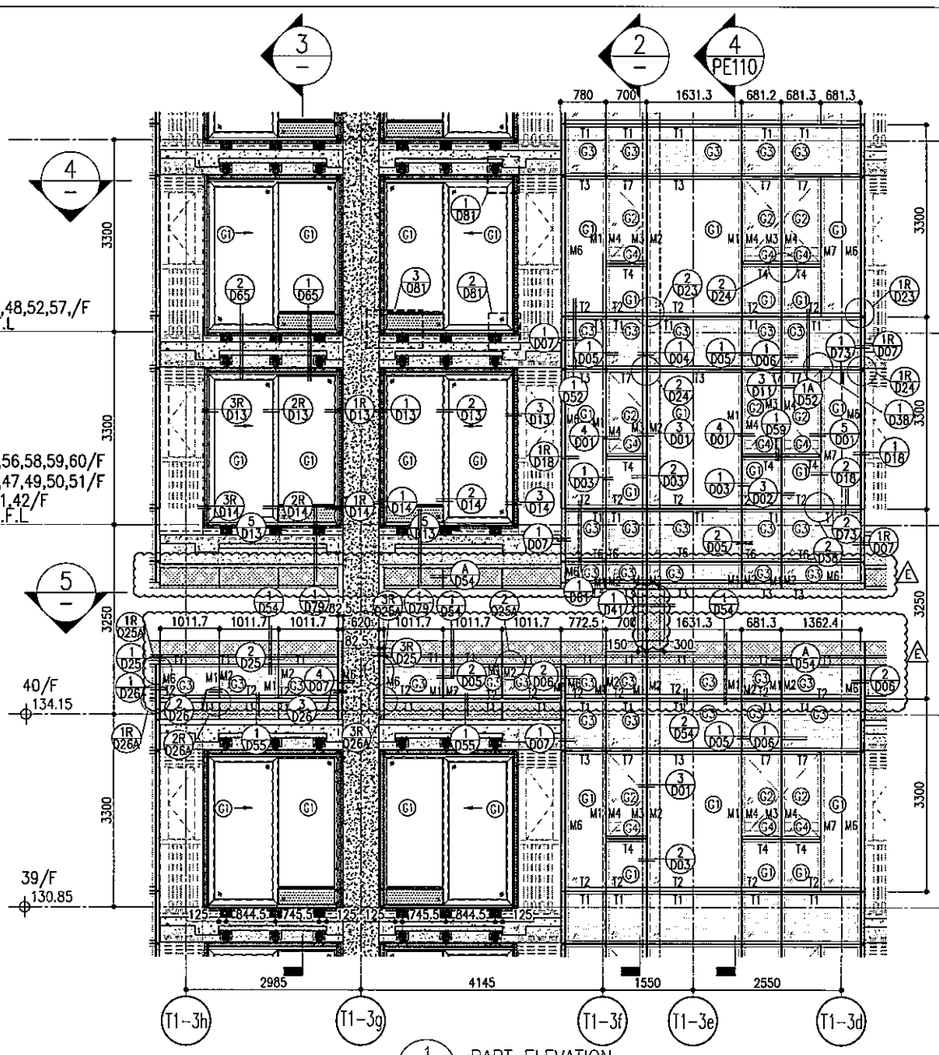

1 PART ELEVATION FOR CURTAIN WALL

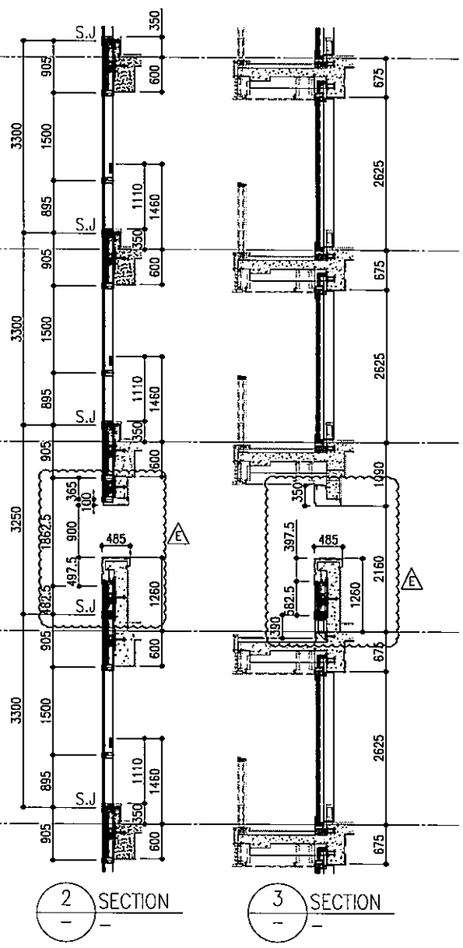

2 SECTION

3 SECTION

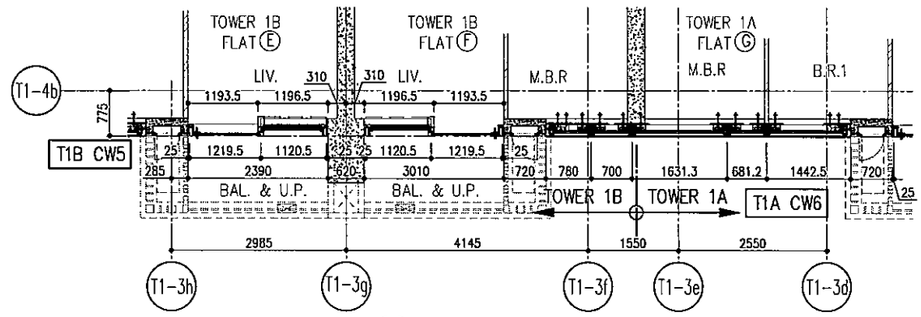

4 PART PLAN FOR CURTAIN WALL

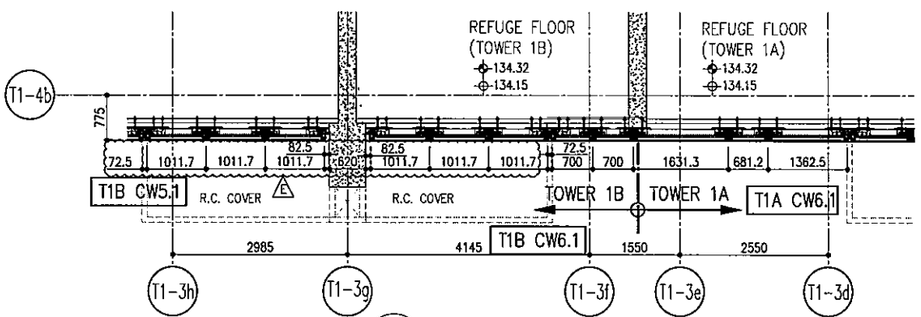

5 PART PLAN(40/F) FOR CURTAIN WALL

26/F	+91.25	39/F	+130.85	52/F	+170.40		
25/F	+87.95	38/F	+127.55	51/F	+167.10		
23/F	+84.65	37/F	+124.25	50/F	+163.80	R/F	+203.80
22/F	+81.35	36/F	+120.95	49/F	+160.50	62/F	+200.30
21/F	+78.05	35/F	+117.65	48/F	+157.20	61/F	+196.80
20/F	+74.75	33/F	+114.35	47/F	+153.90	60/F	+193.50
19/F	+71.45	32/F	+111.05	46/F	+150.60	59/F	+190.20
18/F	+68.15	31/F	107.75	45/F	+147.30	58/F	+186.90
17/F	+64.85	30/F	+104.45	43/F	+144.00	57/F	+183.60
16/F	+61.55	29/F	+101.15	42/F	+140.70	56/F	+180.30
15/F	+58.25	28/F	+97.85	41/F	+137.40	55/F	+177.00
12/F	+54.95	27/F	+94.55	40/F	+134.15	53/F	+173.70

LEGEND:

- G1 – 10mm THK. HEAT STRENGTHENED GLASS (OUTSIDE) +12mm AIR SPACE + 12mm THK. TEMPERED GLASS
- G2 – 10mm THK. HEAT STRENGTHENED GLASS (OUTSIDE) +12mm AIR SPACE + 10mm THK. TEMPERED GLASS
- G3 – 12mm THK. HEAT STRENGTHENED GLASS
- G4 – 12mm THK. CLEAR TEMPERED GLASS (INTERNAL PROTECTIVE BARRIER)
- G5 – 12mm CLEAR HEAT STRENGTHENED GLASS DELETED
- S1 – 10mm THK. CLEAR TEMPERED GLASS
- S2 – 8mm THK. CLEAR HEAT-STRENGTHENED GLASS +1.52mm PVB + 8mm THK. CLEAR HEAT-STRENGTHENED GLASS DELETED
- 3 mm THK. ALUM. CLADDING
- 3 mm THK. ALUM. BACKPAN
- S.J. – STACK JOINT

NOTE:
1. ALL DIMENSIONS ARE IN mm.
2. ALL ELEVATIONS ARE VIEWED FROM OUTSIDE.
3. ALL DIMENSIONS TO BE VERIFIED ON SITE BEFORE FABRICATION.

LEGEND:
- X1 (X05) — DETAIL MARK NO. / REFER SHEET NO.
- 1. F.F.L. --FINISHED FLOOR LEVEL
- 2. S.F.L. --STRUCTURAL FLOOR LEVEL
- 3. /R — --REVERSED DETAIL

VO.	DATE	REVISED	BY
E	23/05/22	REVISED AS PER COMMENTS	LS
D	05/04/22	REVISED AS PER COMMENTS	LS
C	16/03/22	REVISED AS PER COMMENTS	LS
B	20/12/21	REVISED AS PER COMMENTS	LS
A	03/12/21	REVISED AS PER COMMENTS	LS

JOB NO. : J-858

PROJECT : PROPOSED RESIDENTIAL DEVELOPMENT AT TKOTL 70RP, PHASE 11, LOHAS PARK TSEUNG KWAN O, N.T.

TITLE : TYPICAL FLOOR PARTIAL ELEVATION & SECTION, PLAN FOR CURTAIN WALL (TOWER 1)

DATE : 22-OCT-21 | SCALE : 1:50(A1)

DRAWN BY : | CHECKED BY :

DWG NO. : J858-CW-PE111 | REV. : E

美特鋁質有限公司 MIDI ALUMINIUM FABRICATOR LTD.
Units 6-8, Sunroy Industrial Centre, 1/F
610 Cha Kwo Ling Road, Kowloon
Tel:23489211-4 Fax:(852)27727666

CLIENT : 信和置業有限公司 Sino Land Company Limited

ARCHITECT : ronald lu & partners Architects, Planners, Interior Designers 呂元祥建築師事務所(香港)有限公司 Ronald Lu & Partners (HK) Ltd.

MAIN CONTRACTOR : Gammon

STRUCTURAL ENGINEER : AECOM

FACADE CONSULTANT : AECOM

B.D. REF :

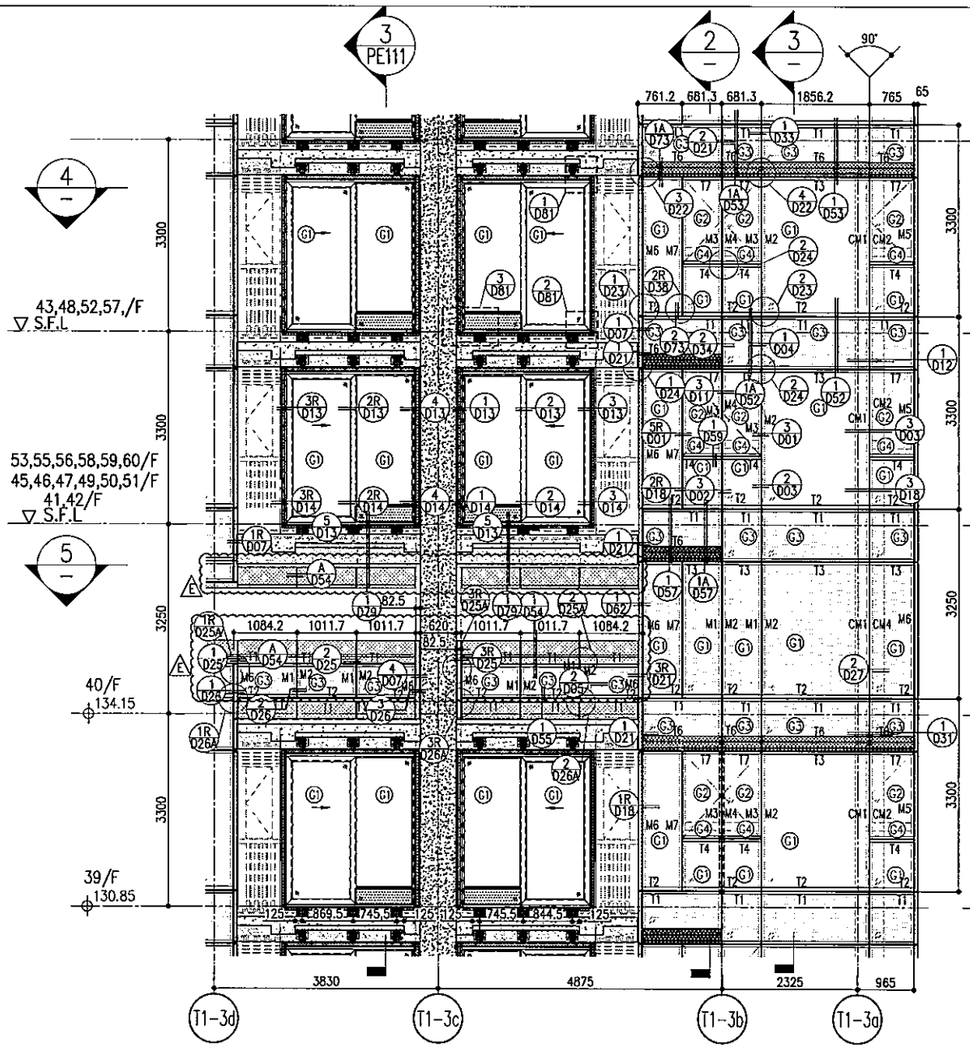

1 / – PART ELEVATION FOR CURTAIN WALL

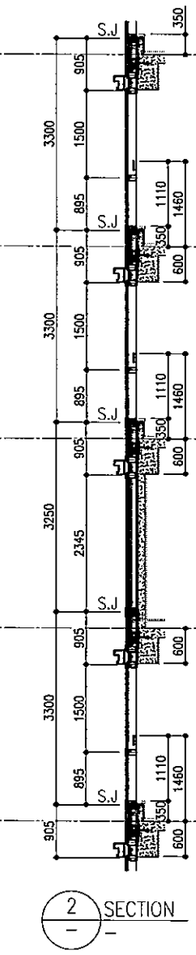

2 / – SECTION

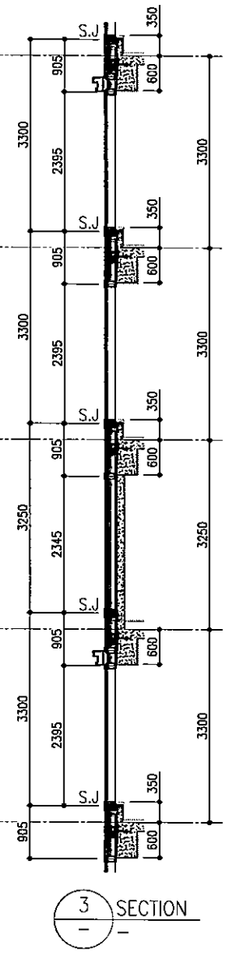

3 / – SECTION

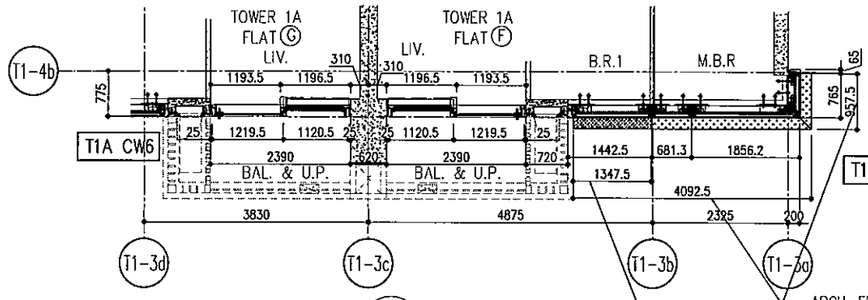

4 / – PART PLAN FOR CURTAIN WALL

26/F	+91.25	39/F	+130.85	52/F	+170.40				
25/F	+87.95	38/F	+127.55	51/F	+167.10				
23/F	+84.65	37/F	+124.25	50/F	+163.80	R/F	+203.80		
22/F	+81.35	36/F	+120.95	49/F	+160.50	62/F	+200.30		
21/F	+78.05	35/F	+117.65	48/F	+157.20	61/F	+196.80		
20/F	+74.75	33/F	+114.35	47/F	+153.90	60/F	+193.50		
19/F	+71.45	32/F	+111.05	46/F	+150.60	59/F	+190.20		
18/F	+68.15	31/F	107.75	45/F	+147.30	58/F	+186.90		
17/F	+64.85	30/F	+104.45	43/F	+144.00	57/F	+183.60		
16/F	+61.55	29/F	+101.15	42/F	+140.70	56/F	+180.30		
15/F	+58.25	28/F	+97.85	41/F	+137.40	55/F	+177.00		
12/F	+54.95	27/F	+94.55	40/F	+134.15	53/F	+173.70		

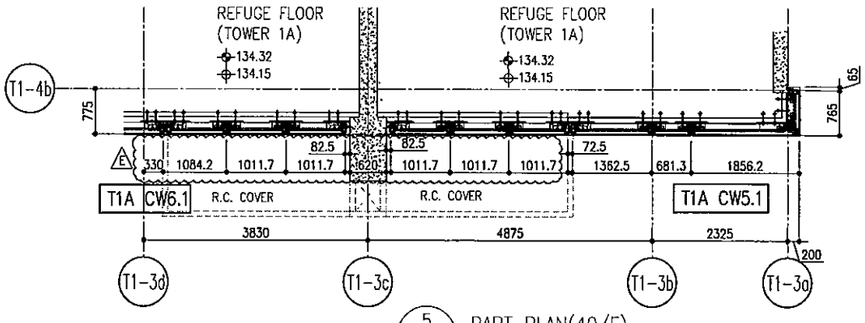

5 / – PART PLAN(40/F) FOR CURTAIN WALL

LEGEND:

- G1 – 10mm THK. HEAT STRENGTHENED GLASS (OUTSIDE) +12mm AIR SPACE + 12mm THK. TEMPERED GLASS
- G2 – 10mm THK. HEAT STRENGTHENED GLASS (OUTSIDE) +12mm AIR SPACE + 10mm THK. TEMPERED GLASS
- G3 – 12mm THK. HEAT STRENGTHENED GLASS
- G4 – 12mm THK. CLEAR TEMPERED GLASS (INTERNAL PROTECTIVE BARRIER)
- G5 – 12mm CLEAR HEAT STRENGTHENED GLASS DELETED
- G6 – 10mm THK. CLEAR TEMPERED GLASS
- G7 – 8mm THK. CLEAR HEAT-STRENGTHENED GLASS +1.52mm PVB + 8mm THK. CLEAR HEAT-STRENGTHENED GLASS DELETED
- 3 mm THK. ALUM. CLADDING
- 3 mm THK. ALUM. BACKPAN
- S.J. – STACK JOINT

NOTE:
1. ALL DIMENSIONS ARE IN mm.
2. ALL ELEVATIONS ARE VIEWED FROM OUTSIDE.
3. ALL DIMENSIONS TO BE VERIFIED ON SITE BEFORE FABRICATION.

LEGEND:
- X1 / XG01 — DETAIL MARK NO. / REFER SHEET NO.
1. F.F.L. --FINISHED FLOOR LEVEL
2. S.F.L. --STRUCTURAL FLOOR LEVEL
3. (R) --REVERSED DETAIL

NO.	DATE	REVISED	BY
E	23/05/22	REVISED AS PER COMMENTS	LS
D	06/04/22	REVISED AS PER COMMENTS	LS
C	16/02/22	REVISED AS PER COMMENTS	LS
B	20/12/21	REVISED AS PER COMMENTS	LS
A	03/12/21	REVISED AS PER COMMENTS	LS

JOB NO. : J-853

PROJECT : PROPOSED RESIDENTIAL DEVELOPMENT AT TKOTL 70RP, PHASE 11, LOHAS PARK TSEUNG KWAN O, N.T.

TITLE : TYPICAL FLOOR PARTIAL ELEVATION & SECTION, PLAN FOR CURTAIN WALL (TOWER 1)

DATE : 22-OCT-21 | SCALE : 1:50(A1)

DRAWN BY : | CHECKED BY :

DWG NO. : J858-CW-PE112 | REV. : E

美特鋁廠有限公司 MIDI ALUMINIUM FABRICATOR LTD.
Units 6-8, Sunray Industrial Centre, 1/F 610 Cha Kwo Ling Road, Kowloon
Tel:23489211-4 Fax:(852)27721666

FACADE CONSULTANT: AECOM

STRUCTURAL ENGINEER: AECOM

MAIN CONTRACTOR: Gammon

ARCHITECT: ronald lu & partners / Ronald Lu & Partners (HK) Ltd. 呂元祥建築師事務所(香港)有限公司

CLIENT: 信和置業有限公司 Sino Land Company Limited

B.D. REF :

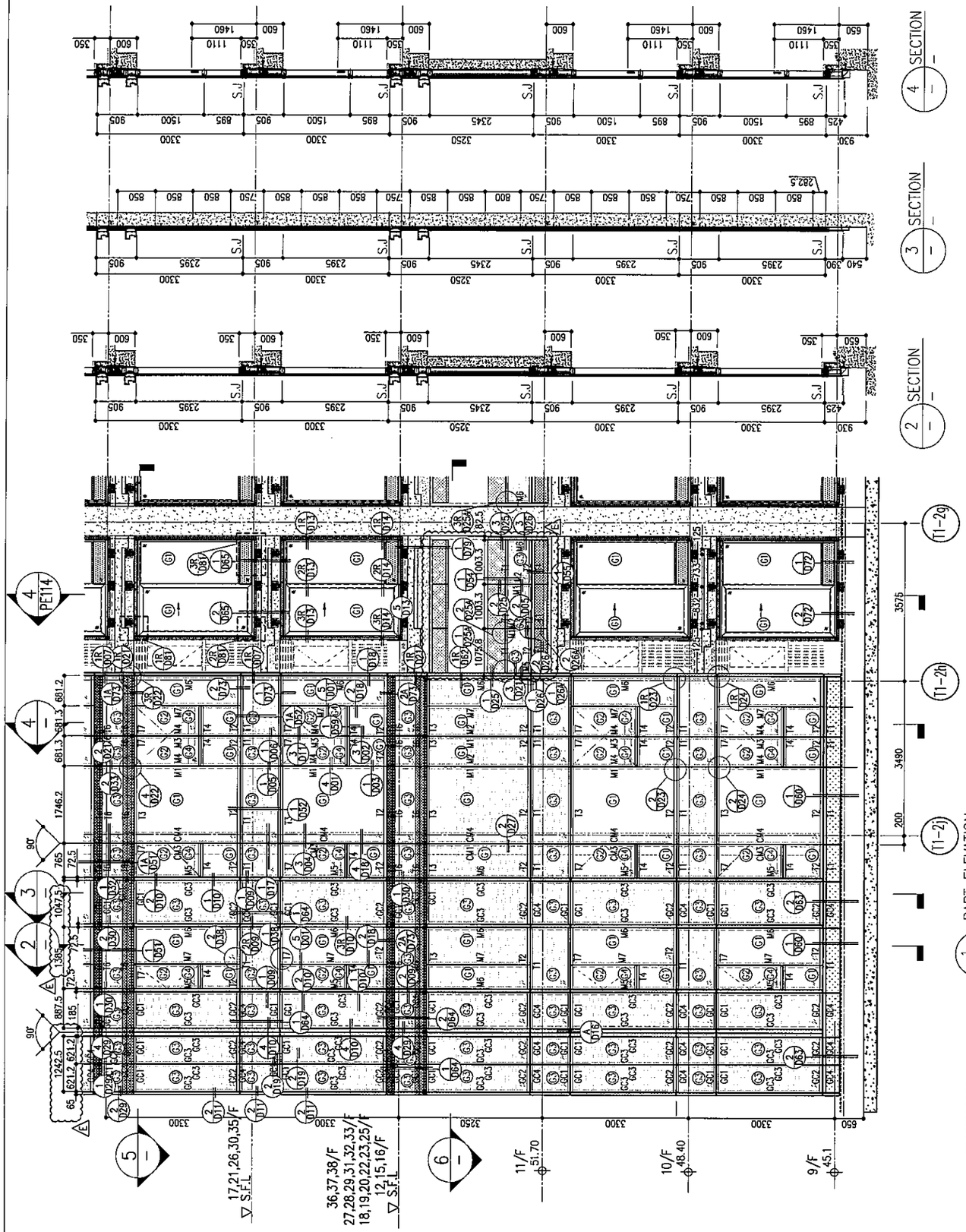

LEGEND:

- G1 – 10mm THK. HEAT STRENGTHENED GLASS (OUTSIDE) + 12mm AIR SPACE + 12mm THK. TEMPERED GLASS
- G2 – 10mm THK. HEAT STRENGTHENED GLASS (OUTSIDE) + 12mm AIR SPACE + 10mm THK. TEMPERED GLASS
- G3 – 12mm THK. HEAT STRENGTHENED GLASS
- G4 – 12mm THK. CLEAR TEMPERED GLASS (INTERNAL PROTECTIVE BARRIER) DELETED
- G5 – 10mm BLUE TINTED HEAT STRENGTHENED GLASS
- G6 – 10mm THK. CLEAR TEMPERED GLASS DELETED
- G7 – 8mm THK. CLEAR HEAT STRENGTHENED GLASS +1.52mm PVB + 8mm THK. CLEAR HEAT-STRENGTHENED GLASS
- – 3 mm THK. ALUM. CLADDING
- – 3 mm THK. ALUM. BACKPAN
- S.J. – STACK JOINT

R/F	+203.80
62/F	+200.30
61/F	+196.80
60/F	+193.50
59/F	+190.20
58/F	+186.90
57/F	+183.60
56/F	+180.30
55/F	+177.00
53/F	+173.70
52/F	+170.40
51/F	+167.10
50/F	+163.80
49/F	+160.50
48/F	+157.20
47/F	+153.90
46/F	+150.60
45/F	+147.30
43/F	+144.00
42/F	+140.70
41/F	+137.40
40/F	+134.15
39/F	+130.85
38/F	+127.55
37/F	+124.25
36/F	+120.95
35/F	+117.65
33/F	+114.35
32/F	+111.05
31/F	107.75
30/F	+104.45
29/F	+101.15
28/F	+97.85
27/F	+94.55
26/F	+91.25
25/F	+87.95
23/F	+84.65
22/F	+81.35
21/F	+78.05
20/F	+74.75
19/F	+71.45
18/F	+68.15
17/F	+64.85
16/F	+61.55
15/F	+58.25
12/F	+54.95

B.D. REF :

CLIENT :
信和置業有限公司
Sino Land Company Limited

ARCHITECT :
ronald lu & partners
Architects · Planners · Interior Designers
Ronald Lu & Partners (HK) Ltd.
呂元祥建築師事務所(香港)有限公司

MAIN CONTRACTOR :
Gammon

STRUCTURAL ENGINEER :
AECOM

FACADE CONSULTANT:
AECOM

NOTE :
1. ALL DIMENSIONS ARE IN mm.
2. ALL ELEVATIONS ARE VIEWED FROM OUTSIDE.
3. ALL DIMENSIONS TO BE VERIFIED ON SITE BEFORE FABRICATION.

LEGEND :
- X1 — DETAIL MARK NO.
- X001 — REFER SHEET NO.

1. F.F.L. --FINISHED FLOOR LEVEL
2. S.F.L. --STRUCTURAL FLOOR LEVEL
3. (R) --REVERSED DETAIL

NO.	DATE	REVISED	BY
E	23/05/22	REVISED AS PER COMMENTS	LS
D	06/04/22	REVISED AS PER COMMENTS	LS
C	17/02/22	REVISED AS PER COMMENTS	LS
B	20/12/21	REVISED AS PER COMMENTS	LS
A	03/12/21	REVISED AS PER COMMENTS	LS

JOB NO. : J-858

PROJECT :
PROPOSED RESIDENTIAL DEVELOPMENT AT TKOTL 70RP, PHASE 11, LOHAS PARK TSEUNG KWAN O, N.T.

TITLE :
TYPICAL FLOOR PARTIAL ELEVATION & SECTION, PLAN FOR CURTAIN WALL (TOWER 1)

DATE : 22-OCT-21 | SCALE : 1:50(A1)

DRAWN BY : | CHECKED BY :

美特鋁質有限公司
MIDI ALUMINUM FABRICATOR LTD.
Units 6-8, Sunray Industrial Centre, 1/F
610 Cha Kwo Ling Road, Kowloon
Tel:23489211-4 Fax:(852)27727666

DWG NO. : J858-CW-PE113 | REV. : E

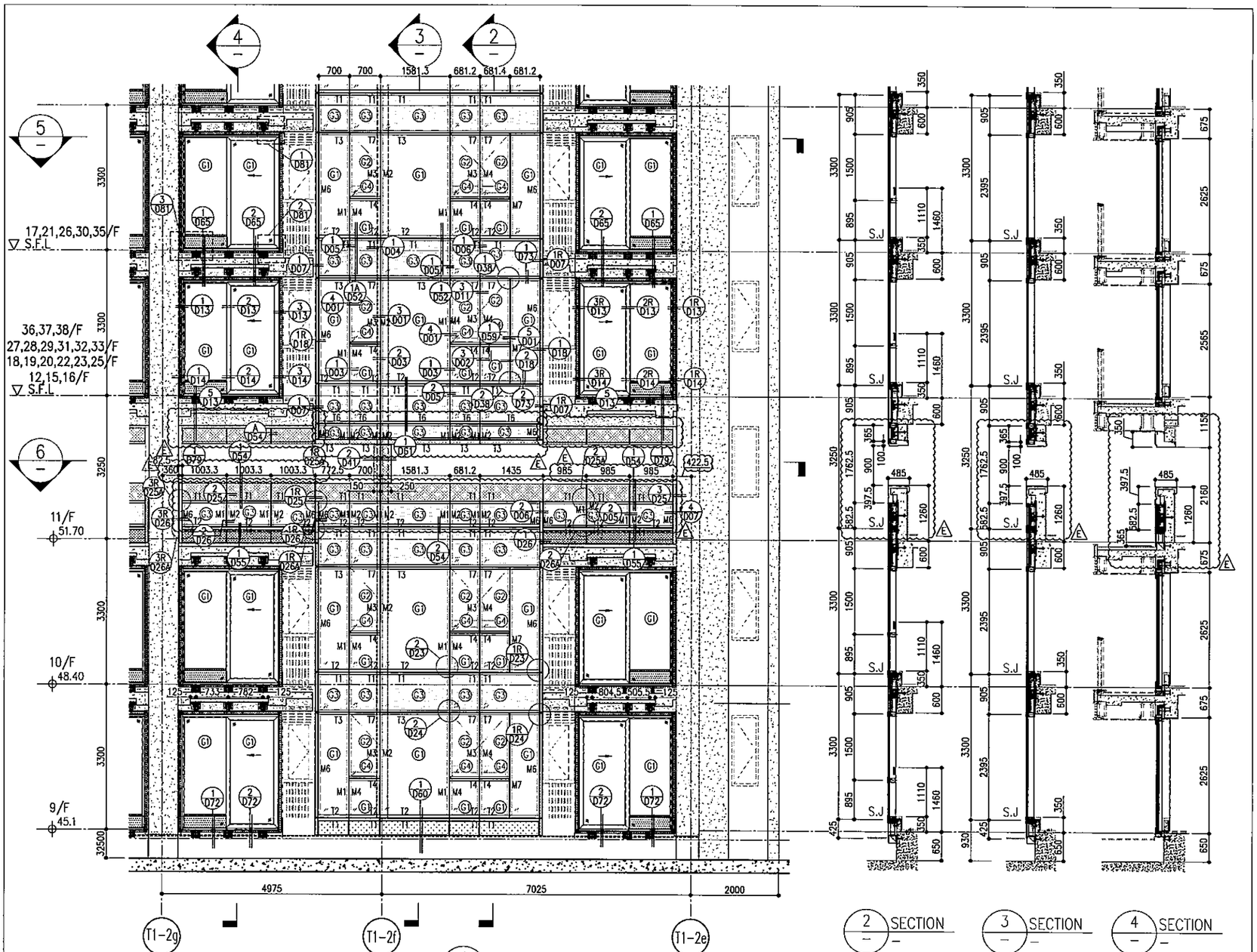

1 PART ELEVATION FOR CURTAIN WALL

2 SECTION

3 SECTION

4 SECTION

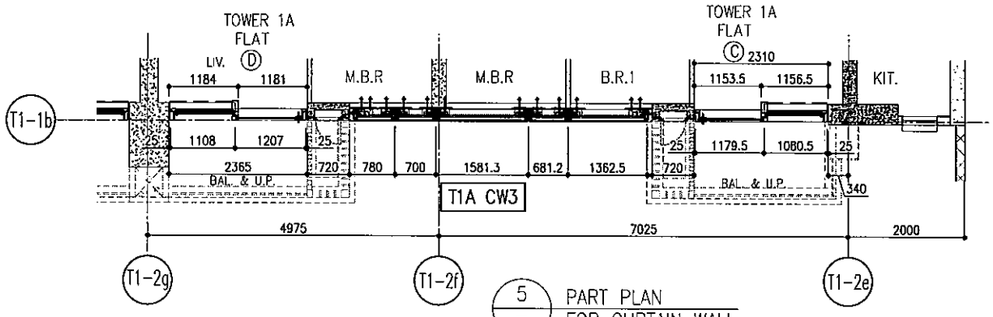

5 PART PLAN FOR CURTAIN WALL

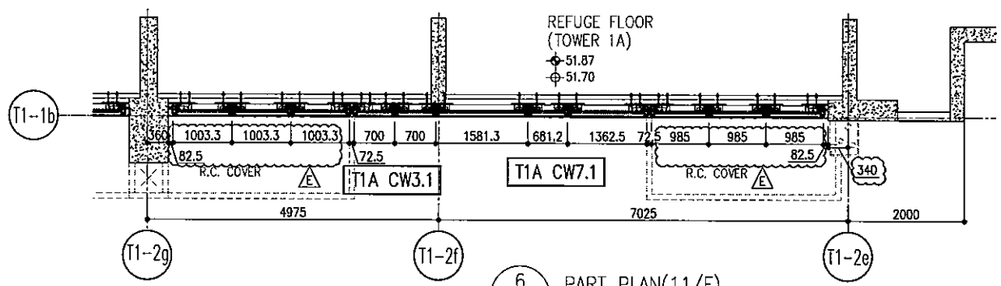

6 PART PLAN(11/F) FOR CURTAIN WALL

26/F	+91.25	39/F	+130.85	52/F	+170.40		
25/F	+87.95	38/F	+127.55	51/F	+167.10		
23/F	+84.65	37/F	+124.25	50/F	+163.80	R/F	+203.80
22/F	+81.35	36/F	+120.95	49/F	+160.50	62/F	+200.30
21/F	+78.05	35/F	+117.65	48/F	+157.20	61/F	+196.80
20/F	+74.75	33/F	+114.35	47/F	+153.90	60/F	+193.50
19/F	+71.45	32/F	+111.05	46/F	+150.60	59/F	+190.20
18/F	+68.15	31/F	107.75	45/F	+147.30	58/F	+186.90
17/F	+64.85	30/F	+104.45	43/F	+144.00	57/F	+183.60
16/F	+61.55	29/F	+101.15	42/F	+140.70	56/F	+180.30
15/F	+58.25	28/F	+97.85	41/F	+137.40	55/F	+177.00
12/F	+54.95	27/F	+94.55	40/F	+134.15	53/F	+173.70

LEGEND:

- G1 – 10mm THK. HEAT STRENGTHENED GLASS (OUTSIDE) +12mm AIR SPACE + 12mm THK. TEMPERED GLASS
- G2 – 10mm THK. HEAT STRENGTHENED GLASS (OUTSIDE) +12mm AIR SPACE + 10mm THK. TEMPERED GLASS
- G3 – 12mm THK. HEAT STRENGTHENED GLASS
- G4 – 12mm THK. CLEAR TEMPERED GLASS (INTERNAL PROTECTIVE BARRIER)
- G5 – 10mm BLUE TINTED HEAT STRENGTHENED GLASS DELETED
- G6 – 10mm THK. CLEAR TEMPERED GLASS DELETED
- G7 – 8mm THK. CLEAR HEAT STRENGTHENED GLASS +1.52mm P.V.B + 8mm THK. CLEAR HEAT-STRENGTHENED GLASS DELETED
- 3 mm THK. ALUM. CLADDING
- 3 mm THK. ALUM. BACKPAN
- S.J. – STACK JOINT

NOTE :
1. ALL DIMENSIONS ARE IN mm.
2. ALL ELEVATIONS ARE VIEWED FROM OUTSIDE.
3. ALL DIMENSIONS TO BE VERIFIED ON SITE BEFORE FABRICATION.

LEGEND :
- X1 / (X00) – DETAIL MARK NO. / REFER SHEET NO.
- F.F.L – FINISHED FLOOR LEVEL
- S.F.L – STRUCTURAL FLOOR LEVEL
- R – REVERSED DETAIL

NO.	DATE	REVISED	BY
E	23/05/22	REVISED AS PER COMMENTS	LS
D	06/04/22	REVISED AS PER COMMENTS	LS
C	17/02/22	REVISED AS PER COMMENTS	LS
B	20/12/21	REVISED AS PER COMMENTS	LS
A	03/12/21	REVISED AS PER COMMENTS	LS

JOB NO. : J-858

PROJECT : PROPOSED RESIDENTIAL DEVELOPMENT AT TKOTL 70RP, PHASE 11, LOHAS PARK TSEUNG KWAN O, N.T.

TITLE : TYPICAL FLOOR PARTIAL ELEVATION & SECTION, PLAN FOR CURTAIN WALL (TOWER 1)

DATE : 22-OCT-21 | SCALE : 1:50(A1)

DRAWN BY : | CHECKED BY :

DWG NO. : J858-CW-PE114 | REV. : E

美特鋁廠有限公司 MIDI ALUMINIUM FABRICATOR LTD.
Units 6-8, Sunray Industrial Centre, 1/F
610 Cha Kwo Ling Road, Kowloon
Tel:23489211-4 Fax:(852)27727666

CLIENT : 信和置業有限公司 Sino Land Company Limited

ARCHITECT : ronald lu & partners 呂元祥建築師事務所(香港)有限公司 Ronald Lu & Partners (HK) Ltd.

MAIN CONTRACTOR : Gammon

STRUCTURAL ENGINEER : AECOM

FACADE CONSULTANT : AECOM

B.D. REF :

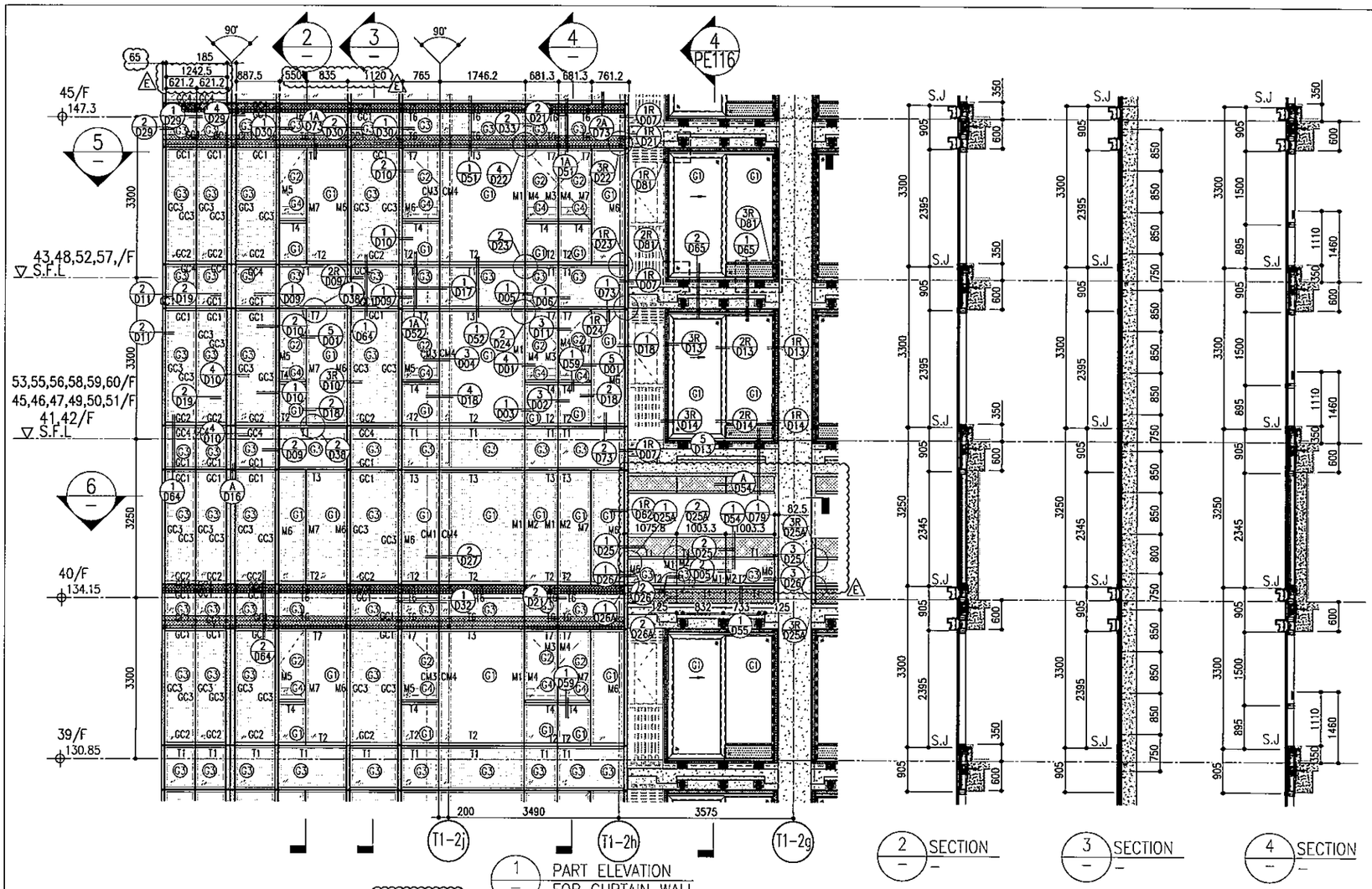

1 / – PART ELEVATION FOR CURTAIN WALL

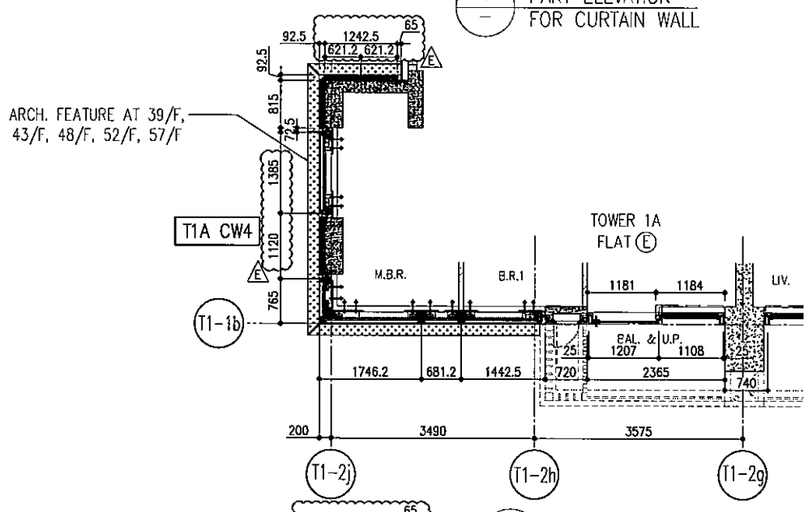

5 / – PART PLAN FOR CURTAIN WALL

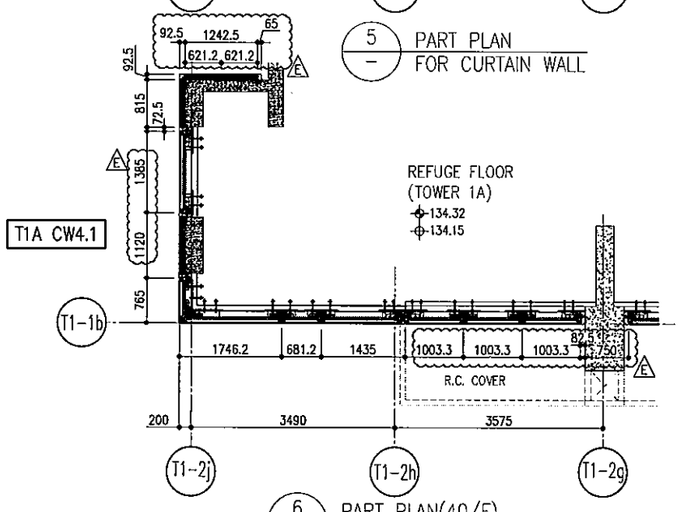

6 / – PART PLAN(40/F) FOR CURTAIN WALL

26/F	+91.25	39/F	+130.85	52/F	+170.40		
25/F	+87.95	38/F	+127.55	51/F	+167.10		
23/F	+84.65	37/F	+124.25	50/F	+163.80	R/F	+203.80
22/F	+81.35	36/F	+120.95	49/F	+160.50	62/F	+200.30
21/F	+78.05	35/F	+117.65	48/F	+157.20	61/F	+196.80
20/F	+74.75	33/F	+114.35	47/F	+153.90	60/F	+193.50
19/F	+71.45	32/F	+111.05	46/F	+150.60	59/F	+190.20
18/F	+68.15	31/F	107.75	45/F	+147.30	58/F	+186.90
17/F	+64.85	30/F	+104.45	43/F	+144.00	57/F	+183.60
16/F	+61.55	29/F	+101.15	42/F	+140.70	56/F	+180.30
15/F	+58.25	28/F	+97.85	41/F	+137.40	55/F	+177.00
12/F	+54.95	27/F	+94.55	40/F	+134.15	53/F	+173.70

LEGEND:

- G1 – 10mm THK. HEAT STRENGTHENED GLASS (OUTSIDE) +12mm AIR SPACE + 12mm THK. TEMPERED GLASS
- G2 – 10mm THK. HEAT STRENGTHENED GLASS (OUTSIDE) +12mm AIR SPACE + 10mm THK. TEMPERED GLASS
- G3 – 12mm THK. HEAT STRENGTHENED GLASS
- G4 – 12mm THK. CLEAR TEMPERED GLASS (INTERNAL PROTECTIVE BARRIER)
- G5 – 10mm BLUE TINTED HEAT STRENGTHENED GLASS DELETED
- G6 – 10mm THK. CLEAR TEMPERED GLASS DELETED
- G7 – 8mm THK. CLEAR HEAT-STRENGTHENED GLASS +1.52mm PVB + 8mm THK. CLEAR HEAT-STRENGTHENED GLASS DELETED
- 3 mm THK. ALUM. CLADDING
- 3 mm THK. ALUM. BACKPAN
- S.J. – STACK JOINT

NOTE:
1. ALL DIMENSIONS ARE IN mm.
2. ALL ELEVATIONS ARE VIEWED FROM OUTSIDE.
3. ALL DIMENSIONS TO BE VERIFIED ON SITE BEFORE FABRICATION.

LEGEND:
- X1 / W301 – DETAIL MARK NO. / REFER SHEET NO.
1. F.F.L. --FINISHED FLOOR LEVEL
2. S.F.L. --STRUCTURAL FLOOR LEVEL
3. R --REVERSED DETAIL

NO.	DATE	REVISED	BY
E	23/05/22	REVISED AS PER COMMENTS	LS
D	06/04/22	REVISED AS PER COMMENTS	LS
C	17/02/22	REVISED AS PER COMMENTS	LS
B	20/12/21	REVISED AS PER COMMENTS	LS
A	03/12/21	REVISED AS PER COMMENTS	LS

JOB NO. : J-858

PROJECT : PROPOSED RESIDENTIAL DEVELOPMENT AT TKOTL 70RP, PHASE 11, LOHAS PARK TSEUNG KWAN O, N.T.

TITLE : TYPICAL FLOOR PARTIAL ELEVATION & SECTION, PLAN FOR CURTAIN WALL (TOWER 1)

DATE : 22-OCT-21 | SCALE : 1:50(A1)

DRAWN BY : | CHECKED BY :

DWG NO. : J858-CW-PE115 | REV. : E

美特鋁廠有限公司 MIDI ALUMINIUM FABRICATOR LTD.
Units 6-8, Sunray Industrial Centre, 1/F
610 Cha Kwo Ling Road, Kowloon
Tel:23489211-4 Fax:(852)27727666

FACADE CONSULTANT: AECOM

STRUCTURAL ENGINEER: AECOM

MAIN CONTRACTOR: Gammon

ARCHITECT: ronald lu & partners 呂元祥建築師事務所 Ronald Lu & Partners (HK) Ltd.

CLIENT: 信和置業有限公司 Sino Land Company Limited

B.D. REF :

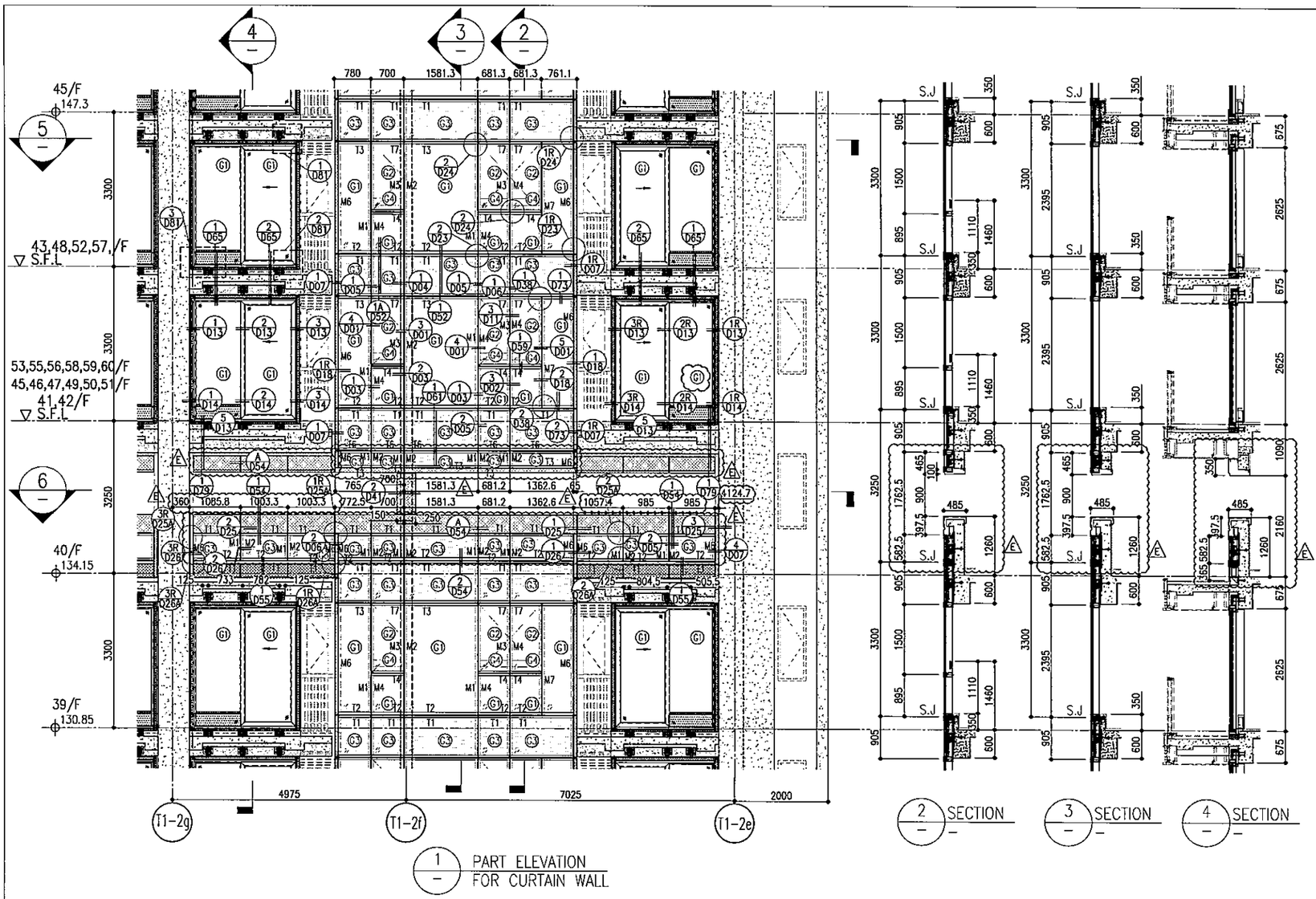

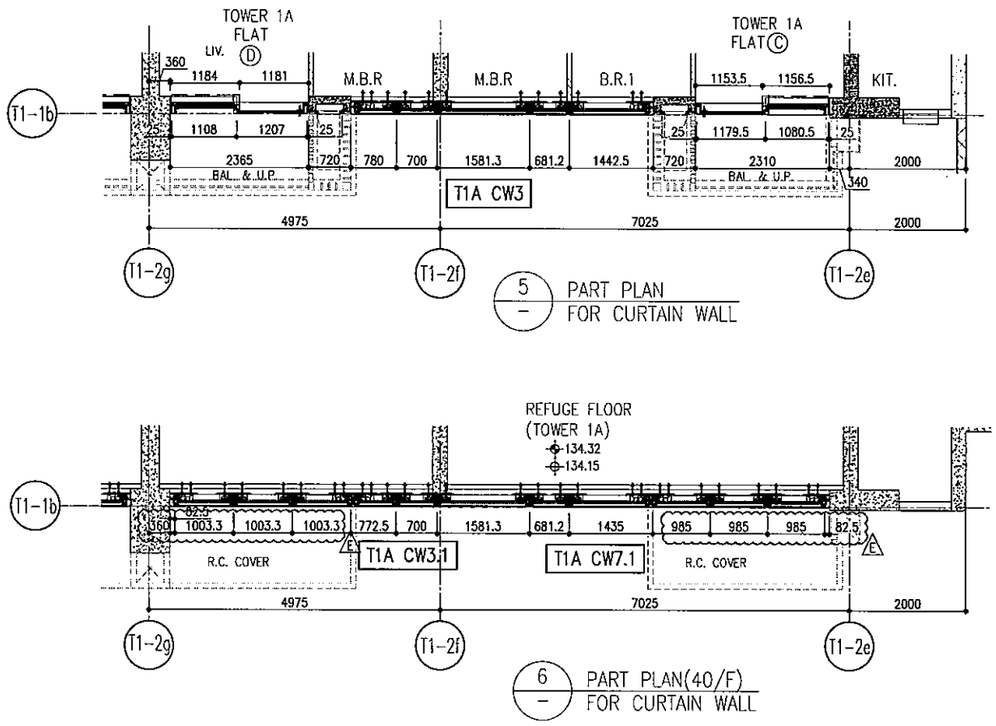

26/F	+91.25	39/F	+130.85	52/F	+170.40	R/F	+203.80
25/F	+87.95	38/F	+127.55	51/F	+167.10	62/F	+200.30
23/F	+84.65	37/F	+124.25	50/F	+163.80	61/F	+196.80
22/F	+81.35	36/F	+120.95	49/F	+160.50	60/F	+193.50
21/F	+78.05	35/F	+117.65	48/F	+157.20	59/F	+190.20
20/F	+74.75	33/F	+114.35	47/F	+153.90	58/F	+186.90
19/F	+71.45	32/F	+111.05	46/F	+150.60	57/F	+183.60
18/F	+68.15	31/F	107.75	45/F	+147.30	56/F	+180.30
17/F	+64.85	30/F	+104.45	43/F	+144.00	55/F	+177.00
16/F	+61.55	29/F	+101.15	42/F	+140.70	53/F	+173.70
15/F	+58.25	28/F	+97.85	41/F	+137.40		
12/F	+54.95	27/F	+94.55	40/F	+134.15		

LEGEND:

- G1 – 10mm THK. HEAT STRENGTHENED GLASS (OUTSIDE) +12mm AIR SPACE + 12mm THK. TEMPERED GLASS
- G2 – 10mm THK. HEAT STRENGTHENED GLASS (OUTSIDE) +12mm AIR SPACE + 10mm THK. TEMPERED GLASS
- G3 – 12mm THK. HEAT STRENGTHENED GLASS
- G4 – 12mm THK. CLEAR TEMPERED GLASS (INTERNAL PROTECTIVE BARRIER)
- G5 – 10mm BLUE TINTED HEAT STRENGTHENED GLASS DELETED
- G6 – 10mm THK. CLEAR TEMPERED GLASS DELETED
- G7 – 8mm THK. CLEAR HEAT-STRENGTHENED GLASS +1.52mm PVB + 8mm THK. CLEAR HEAT-STRENGTHENED GLASS DELETED
- 3 mm THK. ALUM. CLADDING
- 3 mm THK. ALUM. BACKPAN
- S.J. – STACK JOINT

NOTE:
1. ALL DIMENSIONS ARE IN mm.
2. ALL ELEVATIONS ARE VIEWED FROM OUTSIDE.
3. ALL DIMENSIONS TO BE VERIFIED ON SITE BEFORE FABRICATION.

LEGEND:
- (X1) – DETAIL MARK NO.
- (XG01) – REFER SHEET NO.
1. F.F.L. --FINISHED FLOOR LEVEL
2. S.F.L. --STRUCTURAL FLOOR LEVEL
3. (R) --REVERSED DETAIL

NO.	DATE	REMARK	BY
E	23/05/22	REVISED AS PER COMMENTS	LS
D	06/04/22	REVISED AS PER COMMENTS	LS
C	17/01/22	REVISED AS PER COMMENTS	LS
B	29/12/21	REVISED AS PER COMMENTS	LS
A	03/12/21	REVISED AS PER COMMENTS	LS

JOB NO. : J-858

PROJECT : PROPOSED RESIDENTIAL DEVELOPMENT AT TKOTL 70RP, PHASE 1A, LOHAS PARK TSEUNG KWAN O, N.T.

TITLE : TYPICAL FLOOR PARTIAL ELEVATION & SECTION PLAN FOR CURTAIN WALL (TOWER 1)

DATE : 22-OCT-21 | SCALE : 1:50(A1)

DRAWN BY : | CHECKED BY :

DWG NO. : J858-CW-PE116 | REV. : E

美特鋁質有限公司 MIDI ALUMINUM FABRICATOR LTD.
Units 6-8, Sunray Industrial Centre, 1/F
610 Cha Kwo Ling Road, Kowloon
Tel:23489211-4 Fax:(852)27727666

FACADE CONSULTANT: AECOM

STRUCTURAL ENGINEER: AECOM

MAIN CONTRACTOR: Gammon

ARCHITECT: ronald lu & partners, Ronald Lu & Partners (HK) Ltd. 呂元祥建築師事務所(香港)有限公司

CLIENT: 信和置業有限公司 Sino Land Company Limited

B.D. REF :

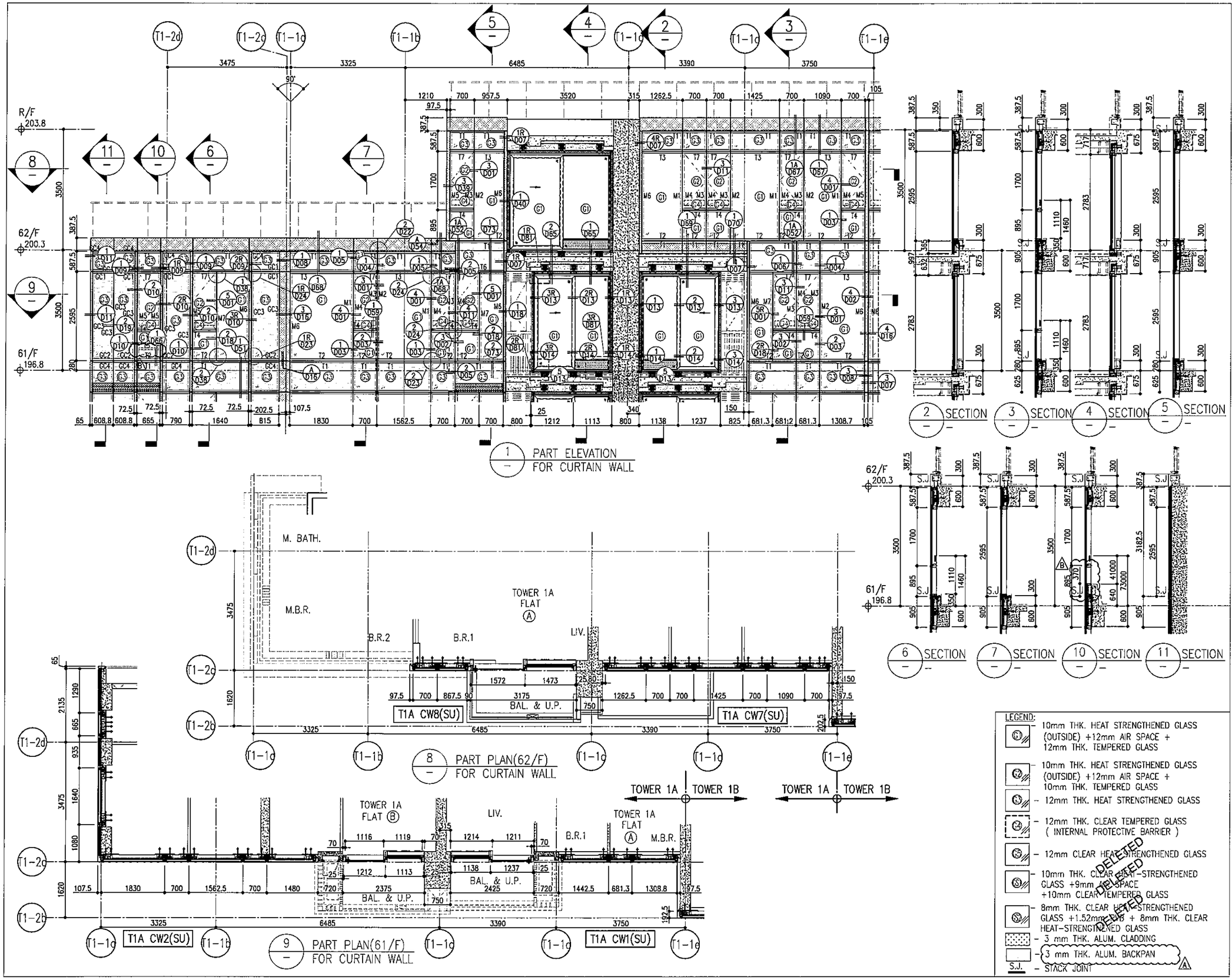

LEGEND:

- G1 – 10mm THK. HEAT STRENGTHENED GLASS (OUTSIDE) +12mm AIR SPACE + 12mm THK. TEMPERED GLASS
- G2 – 10mm THK. HEAT STRENGTHENED GLASS (OUTSIDE) +12mm AIR SPACE + 10mm THK. TEMPERED GLASS
- G3 – 12mm THK. HEAT STRENGTHENED GLASS
- G4 – 12mm THK. CLEAR TEMPERED GLASS (INTERNAL PROTECTIVE BARRIER)
- G5 – 12mm CLEAR HEAT-STRENGTHENED GLASS
- G8 – 10mm THK. CLEAR HEAT-STRENGTHENED GLASS +9mm AIR SPACE +10mm CLEAR TEMPERED GLASS
- G9 – 8mm THK. CLEAR HEAT-STRENGTHENED GLASS +1.52mm PVB + 8mm THK. CLEAR HEAT-STRENGTHENED GLASS
- 3 mm THK. ALUM. CLADDING
- 3 mm THK. ALUM. BACKPAN
- S.J. – STACK JOINT

DELETED
DELETED
DELETED

B.D. REF :

CLIENT :
信和置業有限公司
Sino Land Company Limited

ARCHITECT :
ronald lu & partners
Architects . Planners . Interior Designers
Ronald Lu & Partners (HK) Ltd.
呂元祥建築師事務所(香港)有限公司

MAIN CONTRACTOR :
Gammon

STRUCTURAL ENGINEER :
AECOM

FACADE CONSULTANT:
AECOM

NOTE :
1. ALL DIMENSIONS ARE IN mm.
2. ALL ELEVATIONS ARE VIEWED FROM OUTSIDE.
3. ALL DIMENSIONS TO BE VERIFIED ON SITE BEFORE FABRICATION.

LEGEND :
- K1 / x001 — DETAIL MARK NO. / REFER SHEET NO.
1. F.F.L. -- FINISHED FLOOR LEVEL
2. S.F.L. -- STRUCTURAL FLOOR LEVEL
3. (/R) -- REVERSED DETAIL

NO.	DATE	REVISED	BY
B	26/05/22	REVISED AS PER COMMENTS	LS
A	13/04/22	REVISED AS PER COMMENTS	LS

JOB NO. : J-858

PROJECT :
PROPOSED RESIDENTIAL DEVELOPMENT
AT TKOTL 70RP, PHASE 11, LOHAS PARK
TSEUNG KWAN O, N.T.

TITLE :
PENTHOUSE FLOOR PARTIAL ELEVATION & SECTION, PLAN FOR CURTAIN WALL (TOWER 1)

DATE : 12-JAN-22 | SCALE : 1:50(A1)

DRAWN BY : | CHECKED BY :

美特鋁質有限公司
MIDI ALUMINIUM FABRICATOR LTD.
Units 6-8, Sunray Industrial Centre, 1/F
610 Cha Kwo Ling Road, Kowloon
Tel:23489211-4 Fax:(852)27727666

DWG NO. : J858-CW-PE117 | REV. : B

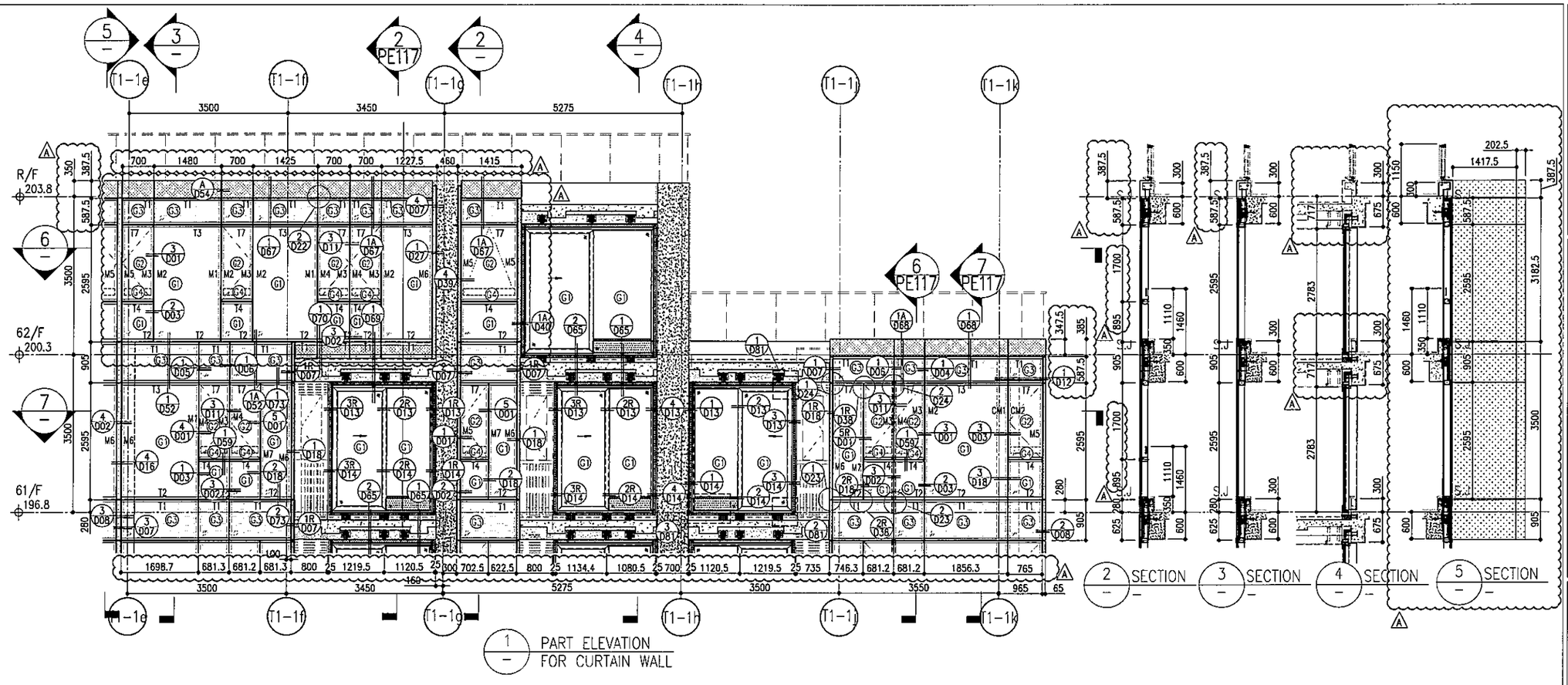

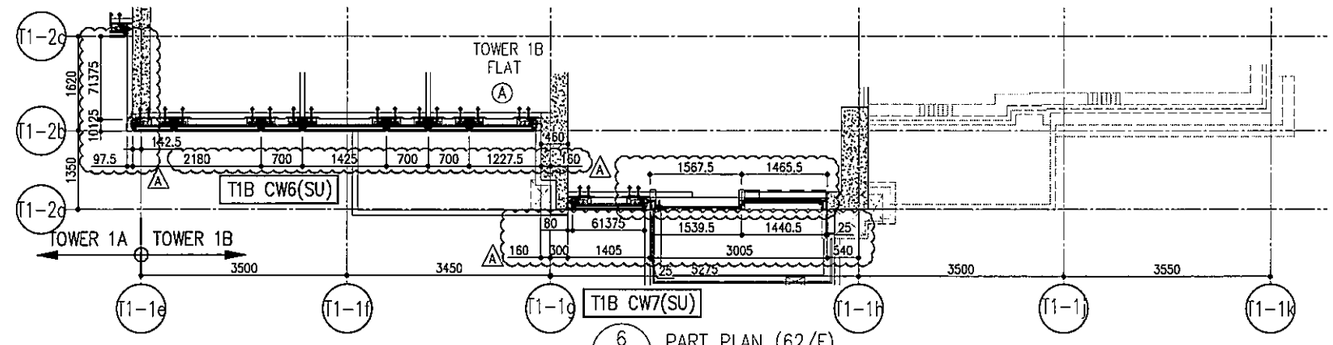

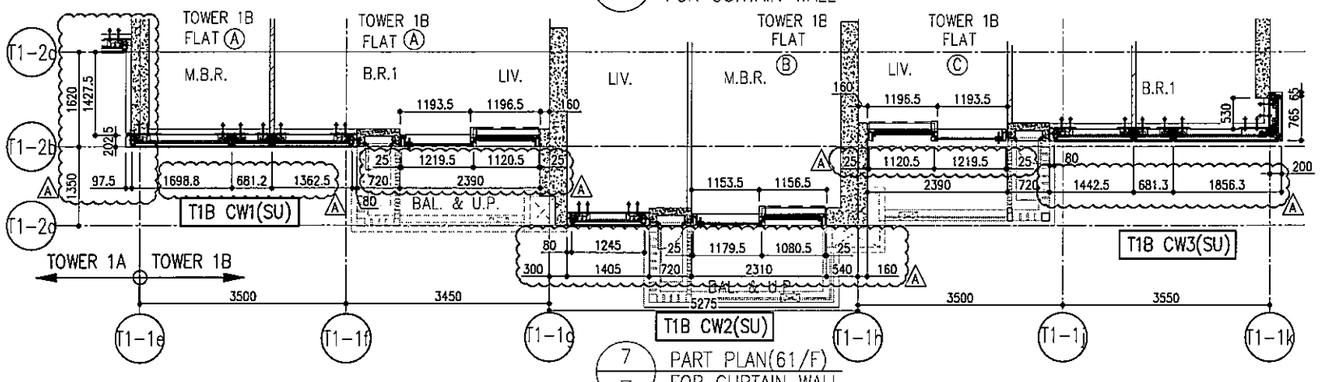

LEGEND:

- C1 – 10mm THK. HEAT STRENGTHENED GLASS (OUTSIDE) +12mm AIR SPACE + 12mm THK. TEMPERED GLASS
- C2 – 10mm THK. HEAT STRENGTHENED GLASS (OUTSIDE) +12mm AIR SPACE + 10mm THK. TEMPERED GLASS
- C3 – 12mm THK. HEAT STRENGTHENED GLASS
- C4 – 12mm THK. CLEAR TEMPERED GLASS (INTERNAL PROTECTIVE BARRIER)
- C5 – 12mm CLEAR HEAT-STRENGTHENED GLASS
- C6 – 10mm THK. CLEAR HEAT-STRENGTHENED GLASS +9mm AIR SPACE +10mm CLEAR TEMPERED GLASS
- C7 – 8mm THK. CLEAR HEAT-STRENGTHENED GLASS +1.52mm PVB + 8mm THK. CLEAR HEAT-STRENGTHENED GLASS

DELETED DELETED

- 3 mm THK. ALUM. CLADDING
- 3 mm THK. ALUM. BACKPAN
- S.J. – STACK JOINT

A

B.D. REF :

CLIENT :
信和置業有限公司
Sino Land Company Limited

ARCHITECT :
ronald lu & partners
Architects . Planners . Interior Designers
Ronald Lu & Partners (HK) Ltd.
呂元祥建築師事務所(香港)有限公司

MAIN CONTRACTOR :
Gammon

STRUCTURAL ENGINEER :
AECOM

FACADE CONSULTANT:
AECOM

NOTE :
1. ALL DIMENSIONS ARE IN mm.
2. ALL ELEVATIONS ARE VIEWED FROM OUTSIDE.
3. ALL DIMENSIONS TO BE VERIFIED ON SITE BEFORE FABRICATION.

LEGEND :
- X1 / X001 — DETAIL MARK NO. / REFER SHEET NO.
1. F.F.L. --FINISHED FLOOR LEVEL
2. S.F.L. --STRUCTURAL FLOOR LEVEL
3. /R ---REVERSED DETAIL

NO.	DATE	REVISED	BY
A	13/04/22	REVISED AS PER COMMENTS	LS

JOB NO. : J-858

PROJECT :
PROPOSED RESIDENTIAL DEVELOPMENT AT TKOTL 70RP, PHASE 11, LOHAS PARK TSEUNG KWAN O, N.T.

TITLE :
PENTHOUSE FLOOR PARTIAL ELEVATION & SECTION, PLAN FOR CURTAIN WALL (TOWER 1)

DATE : 12-JAN-22 | SCALE : 1:50(A1)

DRAWN BY : | CHECKED BY :

美特鋁質有限公司
MIDI ALUMINIUM FABRICATOR LTD.
Units 6-8, Sunray Industrial Centre, 1/F
610 Cha Kwo Ling Road, Kowloon
Tel:23489211-4 Fax:(852)27727666

DWG NO. : J858-CW-PE118 | REV. : A

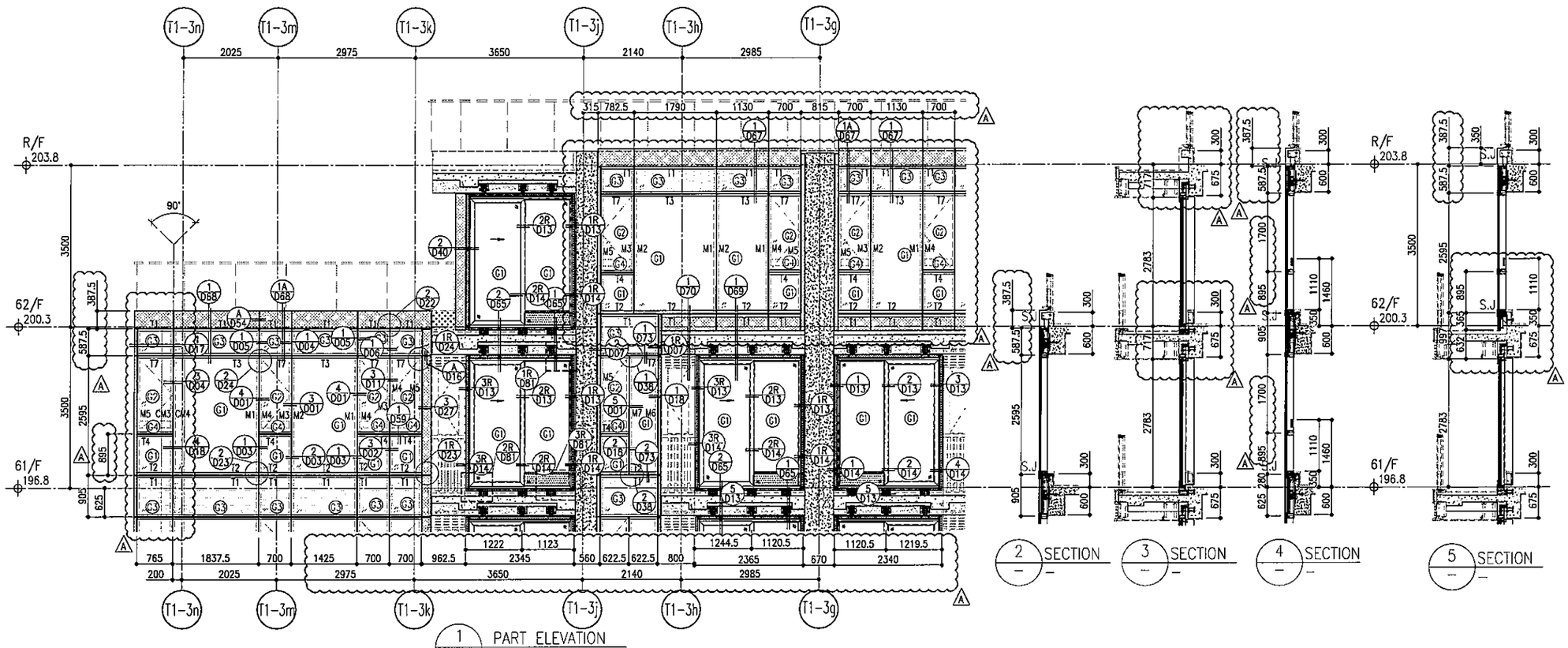

1 PART ELEVATION FOR CURTAIN WALL

2 SECTION

3 SECTION

4 SECTION

5 SECTION

6 PART PLAN(62/F) FOR CURTAIN WALL

7 PART PLAN(61/F) FOR CURTAIN WALL

LEGEND:

- G1 – 10mm THK. HEAT STRENGTHENED GLASS (OUTSIDE) +12mm AIR SPACE + 12mm THK. TEMPERED GLASS
- G2 – 10mm THK. HEAT STRENGTHENED GLASS (OUTSIDE) +12mm AIR SPACE + 10mm THK. TEMPERED GLASS
- G3 – 12mm THK. HEAT STRENGTHENED GLASS
- G4 – 12mm THK. CLEAR TEMPERED GLASS (INTERNAL PROTECTIVE BARRIER)
- G5 – 12mm CLEAR HEAT-STRENGTHENED GLASS
- G6 – 10mm THK. CLEAR HEAT-STRENGTHENED GLASS +9mm AIR SPACE +10mm CLEAR TEMPERED GLASS
- G7 – 8mm THK. CLEAR HEAT-STRENGTHENED GLASS +1.52mm PVB + 8mm THK. CLEAR HEAT-STRENGTHENED GLASS
- 3 mm THK. ALUM. CLADDING
- 3 mm THK. ALUM. BACKPAN
- S.J. – STACK JOINT

DELETED DELETED

B.D. REF :

CLIENT :
信和置業有限公司
Sino Land Company Limited

ARCHITECT :
ronald lu & partners
Architects . Planners . Interior Designers
Ronald Lu & Partners (HK) Ltd.
呂元祥建築師事務所(香港)有限公司

MAIN CONTRACTOR :
Gammon

STRUCTURAL ENGINEER :
AECOM

FACADE CONSULTANT:
AECOM

NOTE :
1. ALL DIMENSIONS ARE IN mm.
2. ALL ELEVATIONS ARE VIEWED FROM OUTSIDE.
3. ALL DIMENSIONS TO BE VERIFIED ON SITE BEFORE FABRICATION.

LEGEND :
- (X1 / X001) — DETAIL MARK NO. / REFER SHEET NO.
1. F.F.L. --FINISHED FLOOR LEVEL
2. S.F.L. --STRUCTURAL FLOOR LEVEL
3. (/R) --REVERSED DETAIL

NO.	DATE	REVISED	BY
A	13/04/22	REVISED AS PER COMMENTS	LS

JOB NO. : J-858

PROJECT :
PROPOSED RESIDENTIAL DEVELOPMENT
AT TKOTL 70RP, PHASE 11, LOHAS PARK
TSEUNG KWAN O, N.T.

TITLE :
PENTHOUSE FLOOR PARTIAL ELEVATION & SECTION, PLAN FOR CURTAIN WALL (TOWER 1)

DATE : 12-JAN-22 | SCALE : 1:50(A1)

DRAWN BY : | CHECKED BY :

美特鋁質有限公司
MIDI ALUMINIUM FABRICATOR LTD.
Units 6-8, Sunray Industrial Centre, 1/F
610 Cha Kwo Ling Road, Kowloon
Tel:23489211-4 Fax:(852)27727666

DWG NO. : J858-CW-PE119 | REV. : A

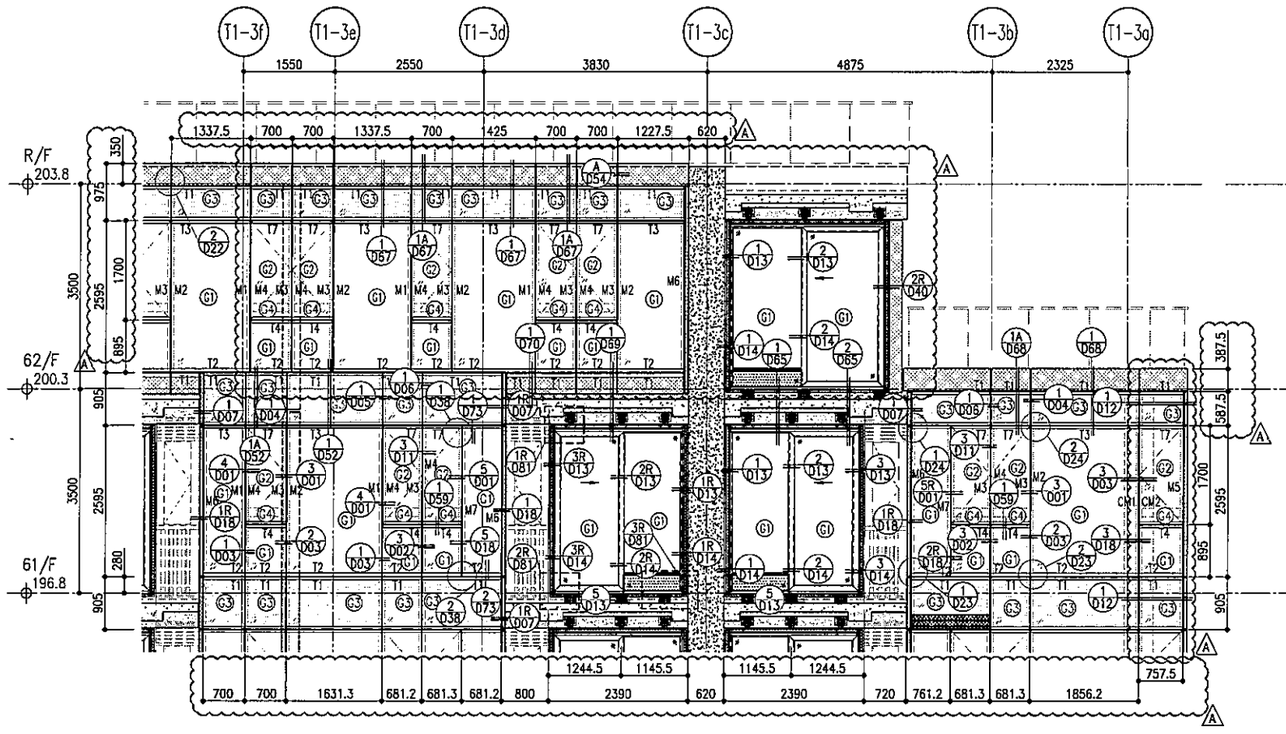

1 / – PART ELEVATION FOR CURTAIN WALL

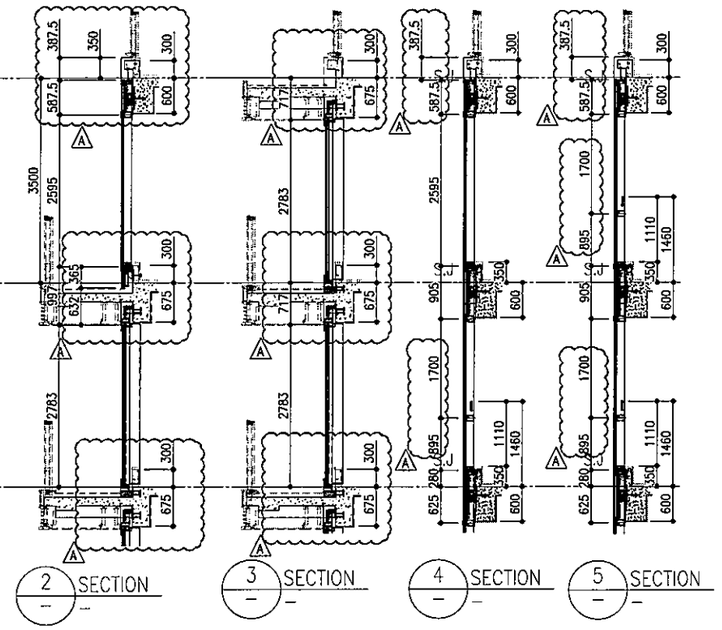

2 / – SECTION

3 / – SECTION

4 / – SECTION

5 / – SECTION

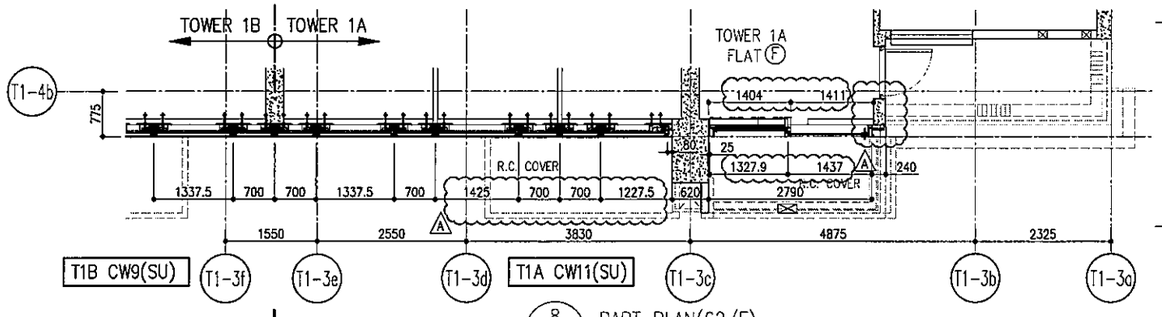

8 / – PART PLAN(62/F) FOR CURTAIN WALL

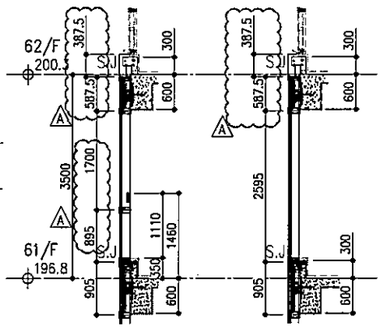

6 / – SECTION

7 / – SECTION

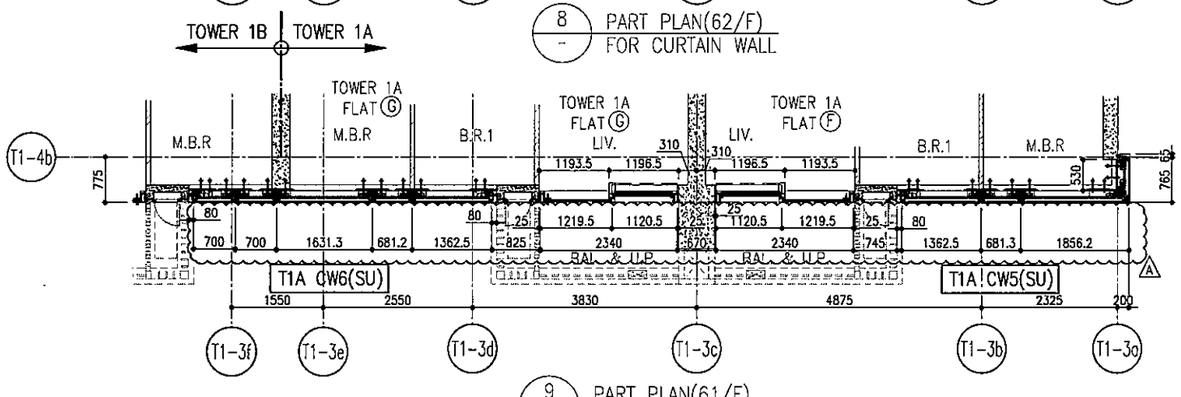

9 / – PART PLAN(61/F) FOR CURTAIN WALL

LEGEND:

- (G1) – 10mm THK. HEAT STRENGTHENED GLASS (OUTSIDE) +12mm AIR SPACE + 12mm THK. TEMPERED GLASS
- (G2) – 10mm THK. HEAT STRENGTHENED GLASS (OUTSIDE) +12mm AIR SPACE + 10mm THK. TEMPERED GLASS
- (G3) – 12mm THK. HEAT STRENGTHENED GLASS
- (G4) – 12mm THK. CLEAR TEMPERED GLASS (INTERNAL PROTECTIVE BARRIER)
- (G5) – 12mm CLEAR HEAT-STRENGTHENED GLASS
- (G6) – 10mm THK. CLEAR HEAT-STRENGTHENED GLASS +9mm AIR SPACE +10mm CLEAR TEMPERED GLASS
- (G7) – 8mm THK. CLEAR HEAT-STRENGTHENED GLASS +1.52mm PVB + 8mm THK. CLEAR HEAT-STRENGTHENED GLASS
- – 3 mm THK. ALUM. CLADDING
- – 3 mm THK. ALUM. BACKPAN
- S.J. – STACK JOINT

A DELETED DELETED

B.D. REF :

CLIENT :
信和置業有限公司
Sino Land Company Limited

ARCHITECT :
ronald lu & partners
Architects . Planners . Interior Designers
Ronald Lu & Partners (HK) Ltd.
呂元祥建築師事務所(香港)有限公司

MAIN CONTRACTOR :
Gammon

STRUCTURAL ENGINEER :
AECOM

FACADE CONSULTANT:
AECOM

NOTE :
1. ALL DIMENSIONS ARE IN mm.
2. ALL ELEVATIONS ARE VIEWED FROM OUTSIDE.
3. ALL DIMENSIONS TO BE VERIFIED ON SITE BEFORE FABRICATION.

LEGEND :
- X1 / X001 – DETAIL MARK NO. / REFER SHEET NO.
1. F.F.L. --FINISHED FLOOR LEVEL
2. S.F.L. --STRUCTURAL FLOOR LEVEL
3. (R) --REVERSED DETAIL

NO.	DATE	REVISED	BY
A	13/04/22	REVISED AS PER COMMENTS	LS

JOB NO. : J-858

PROJECT :
PROPOSED RESIDENTIAL DEVELOPMENT AT TKOTL 70RP, PHASE 11, LOHAS PARK TSEUNG KWAN O, N.T.

TITLE :
PENTHOUSE FLOOR PARTIAL ELEVATION & SECTION, PLAN FOR CURTAIN WALL (TOWER 1)

DATE : 12-JAN-22 | SCALE : 1:50(A1)

DRAWN BY : | CHECKED BY :

美特鋁質有限公司
MIDI ALUMINIUM FABRICATOR LTD.
Units 6-8, Sunray Industrial Centre, 1/F
610 Cha Kwo Ling Road, Kowloon
Tel:23489211-4 Fax:(852)27727666

DWG NO. : J858-CW-PE120 | REV. : A

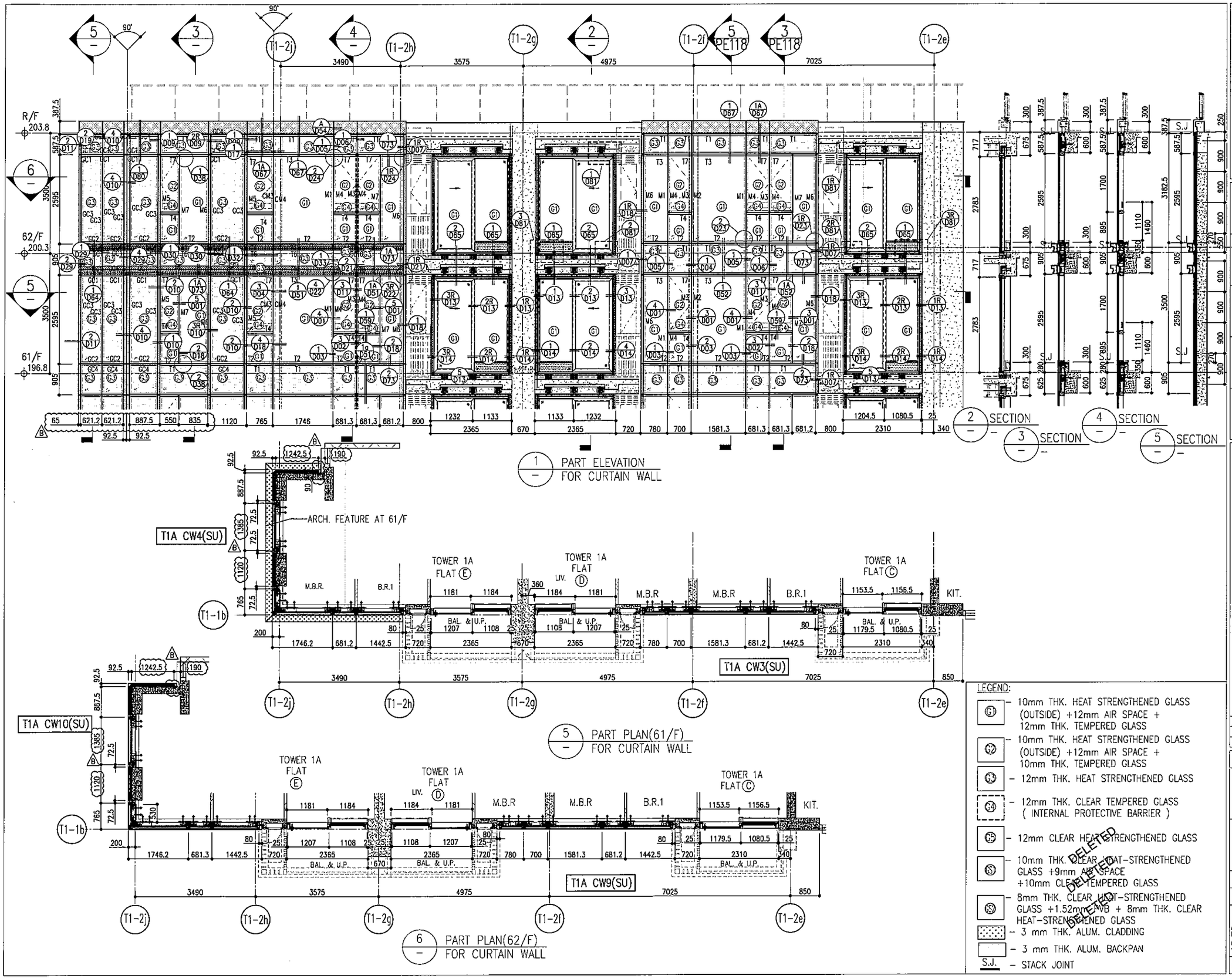

1 PART ELEVATION FOR CURTAIN WALL

2 SECTION

3 SECTION

4 SECTION

5 SECTION

5 PART PLAN(61/F) FOR CURTAIN WALL

6 PART PLAN(62/F) FOR CURTAIN WALL

LEGEND:

- G1 – 10mm THK. HEAT STRENGTHENED GLASS (OUTSIDE) +12mm AIR SPACE + 12mm THK. TEMPERED GLASS
- G2 – 10mm THK. HEAT STRENGTHENED GLASS (OUTSIDE) +12mm AIR SPACE + 10mm THK. TEMPERED GLASS
- G3 – 12mm THK. HEAT STRENGTHENED GLASS
- G4 – 12mm THK. CLEAR TEMPERED GLASS (INTERNAL PROTECTIVE BARRIER)
- G5 – 12mm CLEAR HEAT-STRENGTHENED GLASS
- G6 – 10mm THK. CLEAR HEAT-STRENGTHENED GLASS +9mm AIR SPACE +10mm CLEAR TEMPERED GLASS
- G8 – 8mm THK. CLEAR HEAT-STRENGTHENED GLASS +1.52mm PVB + 8mm THK. CLEAR HEAT-STRENGTHENED GLASS
- 3 mm THK. ALUM. CLADDING
- 3 mm THK. ALUM. BACKPAN
- S.J. – STACK JOINT

DELETED

DELETED

B.D. REF :

CLIENT :
信和置業有限公司
Sino Land Company Limited

ARCHITECT :
ronald lu & partners
Architects . Planners . Interior Designers
Ronald Lu & Partners (HK) Ltd.
呂元祥建築師事務所(香港)有限公司

MAIN CONTRACTOR :
Gammon

STRUCTURAL ENGINEER :
AECOM

FACADE CONSULTANT:
AECOM

NOTE :
1. ALL DIMENSIONS ARE IN mm.
2. ALL ELEVATIONS ARE VIEWED FROM OUTSIDE.
3. ALL DIMENSIONS TO BE VERIFIED ON SITE BEFORE FABRICATION.

LEGEND :
- X1 / XD01 — DETAIL MARK NO. / REFER SHEET NO.
1. F.F.L. --FINISHED FLOOR LEVEL
2. S.F.L. --STRUCTURAL FLOOR LEVEL
3. /R --REVERSED DETAIL

NO.	DATE	REVISED	BY
B	24/05/22	REVISED AS PER COMMENTS	LS
A	13/04/22	REVISED AS PER COMMENTS	LS

JOB NO. : J-858

PROJECT :
PROPOSED RESIDENTIAL DEVELOPMENT AT TKOTL 70RP, PHASE 11, LOHAS PARK TSEUNG KWAN O, N.T.

TITLE :
PENTHOUSE FLOOR PARTIAL ELEVATION & SECTION, PLAN FOR CURTAIN WALL (TOWER 1)

DATE : 12-JAN-22 | SCALE : 1:50(A1)

DRAWN BY : | CHECKED BY :

美特鋁質有限公司
MIDI ALUMINIUM FABRICATOR LTD.
Units 6-8, Sunray Industrial Centre, 1/F
610 Cha Kwo Ling Road, Kowloon
Tel:23489211-4 Fax:(852)27727666

DWG NO. : J858-CW-PE121 | REV. : B

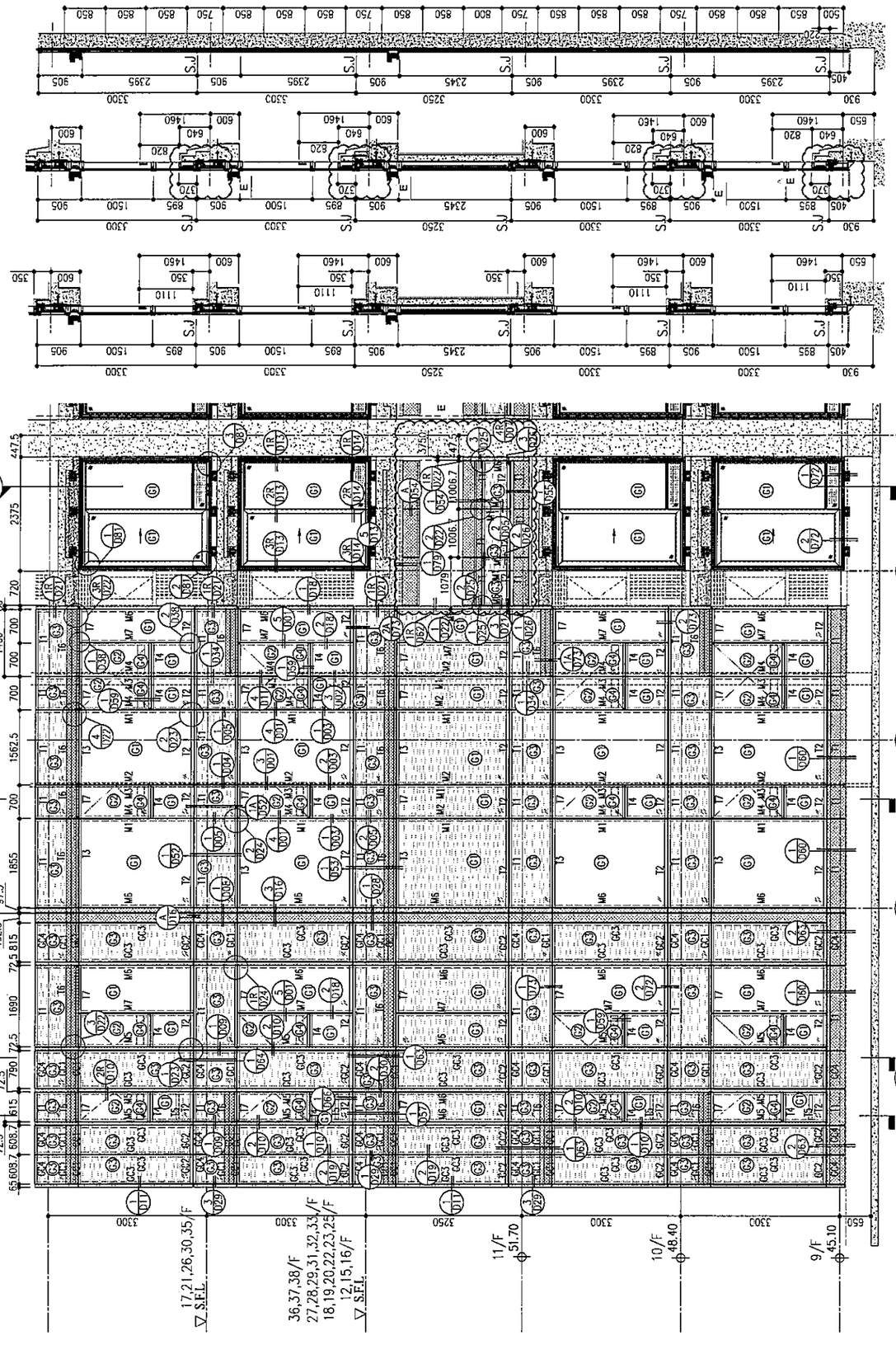

R/F	+217.00	
67/F	+213.50	
66/F	+210.00	
65/F	+206.70	
64/F	+203.40	
63/F	+200.10	
62/F	+196.80	
61/F	+193.50	
60/F	+190.20	
59/F	+186.90	
58/F	+183.60	
57/F	+180.30	
56/F	+177.00	
55/F	+173.70	
54/F	+170.40	52/F +130.85
53/F	+167.10	51/F +127.55
52/F	+163.80	50/F +124.25
51/F	+160.50	49/F +120.95
50/F	+157.20	48/F +117.65
49/F	+153.90	47/F +114.35
48/F	+150.60	46/F +111.05
47/F	+147.30	45/F 107.75
46/F	+144.00	43/F +104.45
45/F	+140.70	42/F +101.15
44/F	+137.40	41/F +97.85
43/F	+134.15	40/F +94.55
42/F	+130.85	39/F +91.25
41/F	+127.55	38/F +87.95
40/F	+124.25	37/F +84.65
39/F	+120.95	36/F +81.35
38/F	+117.65	35/F +78.05
37/F	+114.35	33/F +74.75
36/F	+111.05	32/F +71.45
35/F	107.75	31/F +68.15
34/F	+104.45	30/F +64.85
33/F	+101.15	29/F +61.55
32/F	+97.85	28/F +58.25
31/F	+94.55	27/F +54.95

LEGEND:
- G1 – 10mm THK. HEAT STRENGTHENED GLASS (OUTSIDE) +12mm AIR SPACE + 12mm THK. TEMPERED GLASS
- G2 – 10mm THK. HEAT STRENGTHENED GLASS (OUTSIDE) +12mm AIR SPACE + 10mm THK. TEMPERED GLASS
- G3 – 12mm THK. HEAT STRENGTHENED GLASS
- G4 – 12mm THK. CLEAR TEMPERED GLASS (INTERNAL PROTECTIVE BARRIER)
- G5 – 10mm BLUE TINTED HEAT STRENGTHENED GLASS
- G6 – 10mm THK. CLEAR TEMPERED GLASS
- G7 – 8mm THK. CLEAR HEAT-STRENGTHENED GLASS +1.52mm PVB + 8mm THK. CLEAR HEAT-STRENGTHENED GLASS
- M1 – 3 mm THK. ALUM. CLADDING
- M2 – 3 mm THK. ALUM. BACKPAN
- S.J. – STACK JOINT

NOTE :
1. ALL DIMENSIONS ARE IN mm.
2. ALL ELEVATIONS ARE VIEWED FROM OUTSIDE.
3. ALL DIMENSIONS TO BE VERIFIED ON SITE BEFORE FABRICATION.

LEGEND :
- X1 — DETAIL MARK NO.
- X001 — REFER SHEET NO.

1. F.F.L. --FINISHED FLOOR LEVEL
2. S.F.L. --STRUCTURAL FLOOR LEVEL
3. /R --REVERSED DETAIL

B.D. REF :

CLIENT :
信和置業有限公司
Sino Land Company Limited

ARCHITECT :
ronald lu & partners
Architects . Planners . Interior Designers
Ronald Lu & Partners (HK) Ltd.
呂元祥建築師事務所(香港)有限公司

MAIN CONTRACTOR :
Gammon

STRUCTURAL ENGINEER :
AECOM

FACADE CONSULTANT:
AECOM

NO.	DATE	REVISED	BY
E	26/05/22	REVISED AS PER COMMENTS	LS
D	06/04/22	REVISED AS PER COMMENTS	LS
C	22/01/22	REVISED AS PER COMMENTS	LS
B	20/12/21	REVISED AS PER COMMENTS	LS
A	03/12/21	REVISED AS PER COMMENTS	LS

JOB NO. : J-858

PROJECT :
PROPOSED RESIDENTIAL DEVELOPMENT AT TKOTL 70RP, PHASE 11, LOHAS PARK TSEUNG KWAN O, N.T.

TITLE :
TYPICAL FLOOR PARTIAL ELEVATION & SECTION, PLAN FOR CURTAIN WALL (TOWER 2)

DATE : 20-OCT-21 | SCALE : 1:50(A1)

DRAWN BY : | CHECKED BY :

美特鋁質有限公司
MIDI ALUMINIUM FABRICATOR LTD.
Units 6-8, Sunray Industrial Centre, 1/F
510 Cha Kwo Ling Road, Kowloon
Tel:23469211-4 Fax:(852)27727666

DWG NO. : J858-CW-PE201 | REV. : E

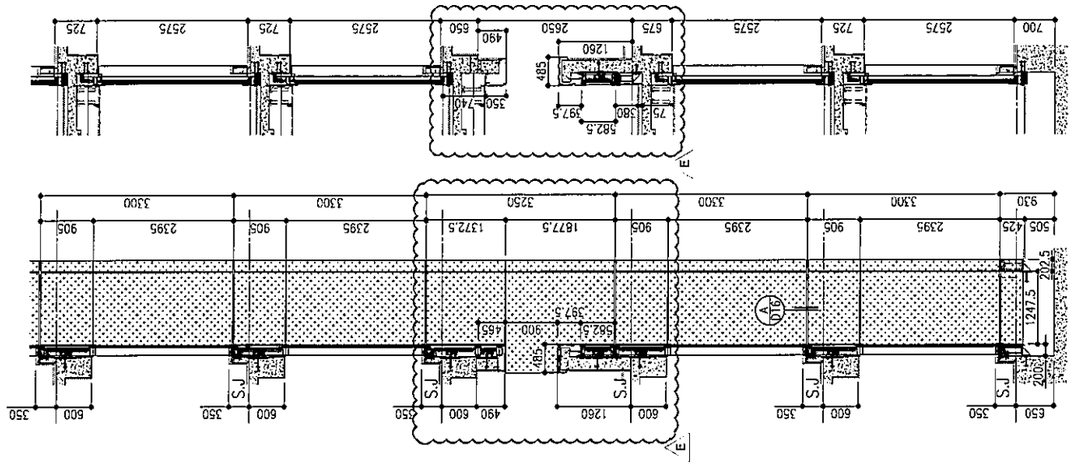

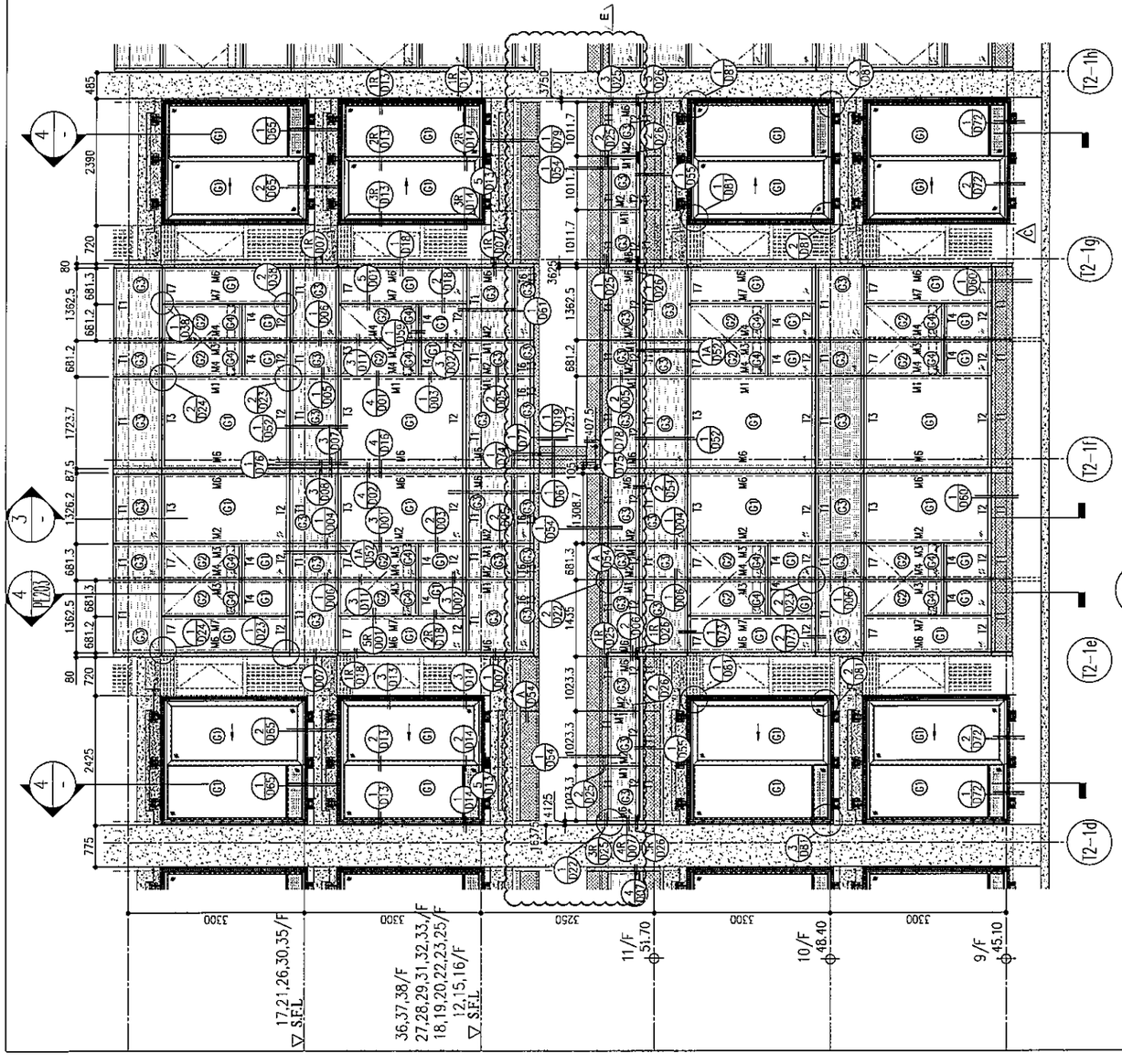

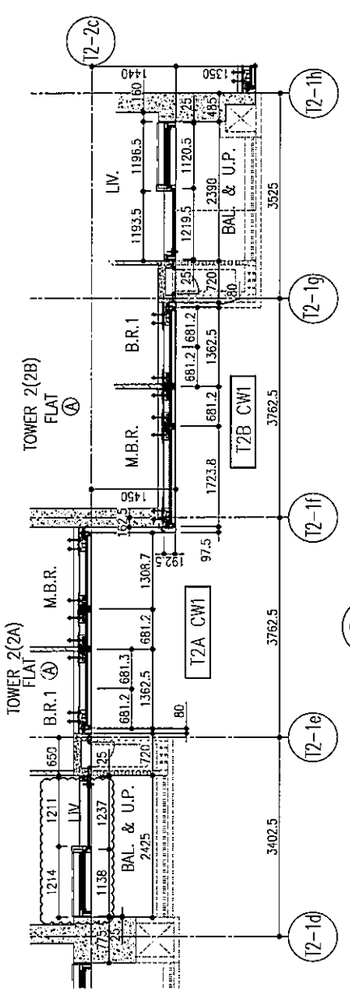

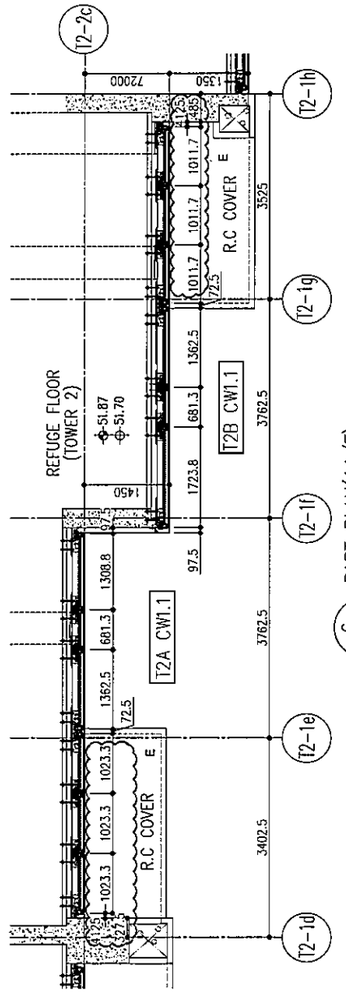

R/F	+217.00	
67/F	+213.50	
66/F	+210.00	
65/F	+206.70	
63/F	+203.40	
62/F	+200.10	
61/F	+196.80	
60/F	+193.50	
59/F	+190.20	
58/F	+186.90	
57/F	+183.60	
56/F	+180.30	
55/F	+177.00	
53/F	+173.70	
52/F	+170.40	
51/F	+167.10	
50/F	+163.80	
49/F	+160.50	
48/F	+157.20	
47/F	+153.90	
46/F	+150.60	
45/F	+147.30	
44/F	+144.00	
43/F	+140.70	
42/F	+137.40	
41/F	+134.15	
40/F	+130.85	
39/F	+127.55	
38/F	+124.25	
37/F	+120.95	
36/F	+117.65	
35/F	+114.35	
33/F	+111.05	
32/F	107.75	
31/F	+104.45	
30/F	+101.15	
29/F	+97.85	
28/F	+94.55	
27/F	+91.25	
26/F	+87.95	
25/F	+84.65	
23/F	+81.35	
22/F	+78.05	
21/F	+74.75	
20/F	+71.45	
19/F	+68.15	
18/F	+64.85	
17/F	+61.55	
16/F	+58.25	
15/F	+54.95	
12/F		

LEGEND:

- (G1) 10mm THK. HEAT STRENGTHENED GLASS (OUTSIDE) + 12mm AIR SPACE + 12mm THK. TEMPERED GLASS
- (G2) 10mm THK. HEAT STRENGTHENED GLASS (OUTSIDE) + 12mm AIR SPACE + 10mm THK. TEMPERED GLASS
- (G3) 12mm THK. HEAT STRENGTHENED GLASS
- (G4) 12mm THK. CLEAR TEMPERED GLASS (INTERNAL PROTECTIVE BARRIER)
- (G5) 10mm BLUE TINTED HEAT STRENGTHENED GLASS
- (G6) 10mm THK. CLEAR TEMPERED GLASS
- (G7) 8mm THK. CLEAR HEAT-STRENGTHENED GLASS + 2mm PVB + 8mm THK. CLEAR HEAT-STRENGTHENED GLASS
- 3 mm THK. ALUM. CLADDING
- 3 mm THK. ALUM. BACKPAN
- S.J. STACK JOINT

B.D. REF :

CLIENT :
信和置業有限公司
Sino Land Company Limited

ARCHITECT :
ronald lu & partners
Architects . Planners . Interior Designers
Ronald Lu & Partners (HK) Ltd.
呂元祥建築師事務所 (香港) 有限公司

MAIN CONTRACTOR :
Gammon

STRUCTURAL ENGINEER :
AECOM

FACADE CONSULTANT:
AECOM

NOTE :
1. ALL DIMENSIONS ARE IN mm.
2. ALL ELEVATIONS ARE VIEWED FROM OUTSIDE.
3. ALL DIMENSIONS TO BE VERIFIED ON SITE BEFORE FABRICATION.

LEGEND :
- X1 / XOO1 — DETAIL MARK NO. / REFER SHEET NO.
1. F.F.L. --FINISHED FLOOR LEVEL
2. S.F.L. --STRUCTURAL FLOOR LEVEL
3. (R) --REVERSED DETAIL

NO.	DATE	REVISED	BY
E	26/05/22	REVISED AS PER COMMENTS	LS
D	06/04/22	REVISED AS PER COMMENTS	LS
C	22/01/22	REVISED AS PER COMMENTS	LS
B	20/12/21	REVISED AS PER COMMENTS	LS
A	03/12/21	REVISED AS PER COMMENTS	LS

JOB NO. : J-858

PROJECT :
PROPOSED RESIDENTIAL DEVELOPMENT AT TKOTL 70RP, PHASE 11, LOHAS PARK TSEUNG KWAN O, N.T.

TITLE :
TYPICAL FLOOR PARTIAL ELEVATION & SECTION, PLAN FOR CURTAIN WALL (TOWER 2)

DATE : 20-OCT-21 | SCALE : 1:50(A1)

DRAWN BY : | CHECKED BY :

美特鋁質有限公司
MIDI ALUMINIUM FABRICATOR LTD.
Units 6-8, Sunray Industrial Centre, 1/F
610 Cha Kwo Ling Road, Kowloon
Tel:23469211-4 Fax:(852)27727666

DWG NO. : J858-CW-PE202 | REV. : E

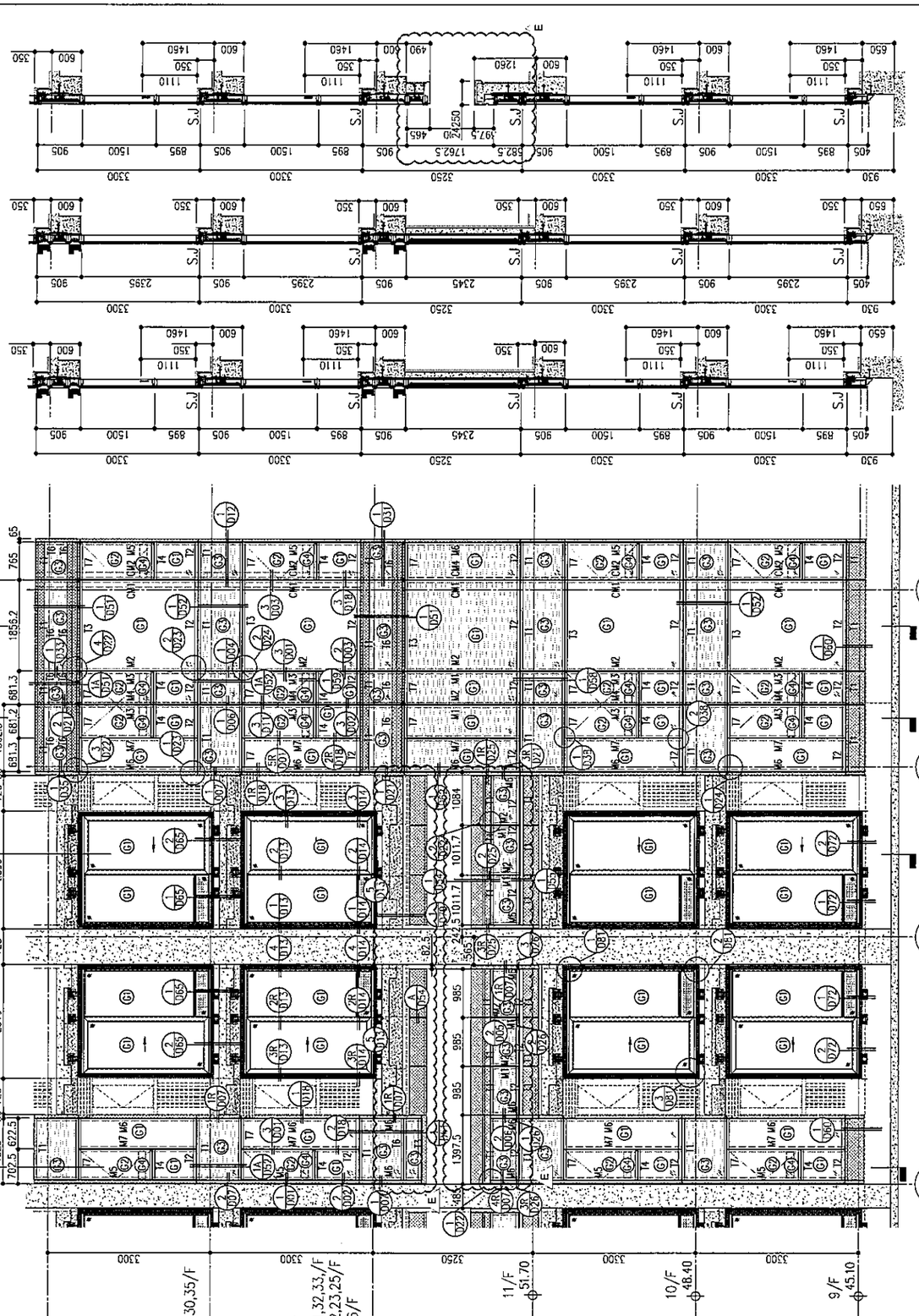

R/F	+217.00
67/F	+213.50
66/F	+210.00
65/F	+206.70
64/F	+203.40
63/F	+200.10
62/F	+196.80
61/F	+193.50
60/F	+190.20
59/F	+186.90
58/F	+183.60
57/F	+180.30
56/F	+177.00
55/F	+173.70
54/F	+170.40
53/F	+167.10
52/F	+163.80
51/F	+160.50
50/F	+157.20
49/F	+153.90
48/F	+150.60
47/F	+147.30
46/F	+144.00
45/F	+140.70
43/F	+137.40
42/F	+134.15
41/F	+130.85
40/F	+127.55
39/F	+124.25
38/F	+120.95
37/F	+117.65
36/F	+114.35
35/F	+111.05
33/F	+107.75
32/F	+104.45
31/F	+101.15
30/F	+97.85
29/F	+94.55
28/F	+91.25
27/F	+87.95
26/F	+84.65
25/F	+81.35
24/F	+78.05
23/F	+74.75
22/F	+71.45
21/F	+68.15
20/F	+64.85
19/F	+61.55
18/F	+58.25
17/F	+54.95
16/F	
15/F	
12/F	

LEGEND:

- 10mm THK. HEAT STRENGTHENED GLASS (OUTSIDE) +12mm AIR SPACE + 12mm THK. TEMPERED GLASS
- 10mm THK. HEAT STRENGTHENED GLASS (OUTSIDE) +12mm AIR SPACE + 10mm THK. TEMPERED GLASS
- 12mm THK. HEAT STRENGTHENED GLASS
- 12mm THK. CLEAR TEMPERED GLASS (INTERNAL PROTECTIVE BARRIER)
- 10mm BLUE TINTED HEAT STRENGTHENED GLASS
- 10mm THK. CLEAR TEMPERED GLASS
- 8mm THK. CLEAR HEAT-STRENGTHENED GLASS + 2mm PVB + 8mm THK. CLEAR HEAT STRENGTHENED GLASS
- 3 mm THK. ALUM. CLADDING
- 3 mm THK. ALUM. BACKPAN
- S.J. – STACK JOINT

B.D. REF :

CLIENT :
信和置業有限公司
Sino Land Company Limited

ARCHITECT :
ronald lu & partners
Architects . Planners . Interior Designers
Ronald Lu & Partners (HK) Ltd.
呂元祥建築師事務所(香港)有限公司

MAIN CONTRACTOR :
Gammon

STRUCTURAL ENGINEER :
AECOM

FACADE CONSULTANT:
AECOM

NOTE :
1. ALL DIMENSIONS ARE IN mm.
2. ALL ELEVATIONS ARE VIEWED FROM OUTSIDE.
3. ALL DIMENSIONS TO BE VERIFIED ON SITE BEFORE FABRICATION.

LEGEND :
- (X1) XDC1 — DETAIL MARK NO. / REFER SHEET NO.
1. F.F.L. --FINISHED FLOOR LEVEL
2. S.F.L. --STRUCTURAL FLOOR LEVEL
3. (/R) --REVERSED DETAIL

NO.	DATE	REVISED	BY
E	26/05/22	REVISED AS PER COMMENTS	LS
D	06/04/22	REVISED AS PER COMMENTS	LS
C	22/01/22	REVISED AS PER COMMENTS	LS
B	20/12/21	REVISED AS PER COMMENTS	LS
A	03/12/21	REVISED AS PER COMMENTS	LS

JOB NO. : J-858

PROJECT :
PROPOSED RESIDENTIAL DEVELOPMENT AT TKOTL 70RP, PHASE 11, LOHAS PARK TSEUNG KWAN O, N.T.

TITLE :
TYPICAL FLOOR PARTIAL ELEVATION & SECTION, PLAN FOR CURTAIN WALL (TOWER 2)

DATE : 20-OCT-21 | SCALE : 1:50(A1)

DRAWN BY : | CHECKED BY :

美特鋁製有限公司
MIDI ALUMINIUM FABRICATOR LTD.
Units 6-8, Sunray Industrial Centre, 1/F
610 Cha Kwo Ling Road, Kowloon
Tel:23469211-4 Fax:(852)27727666

DWG NO. : J858-CW-PE203 | REV. : E

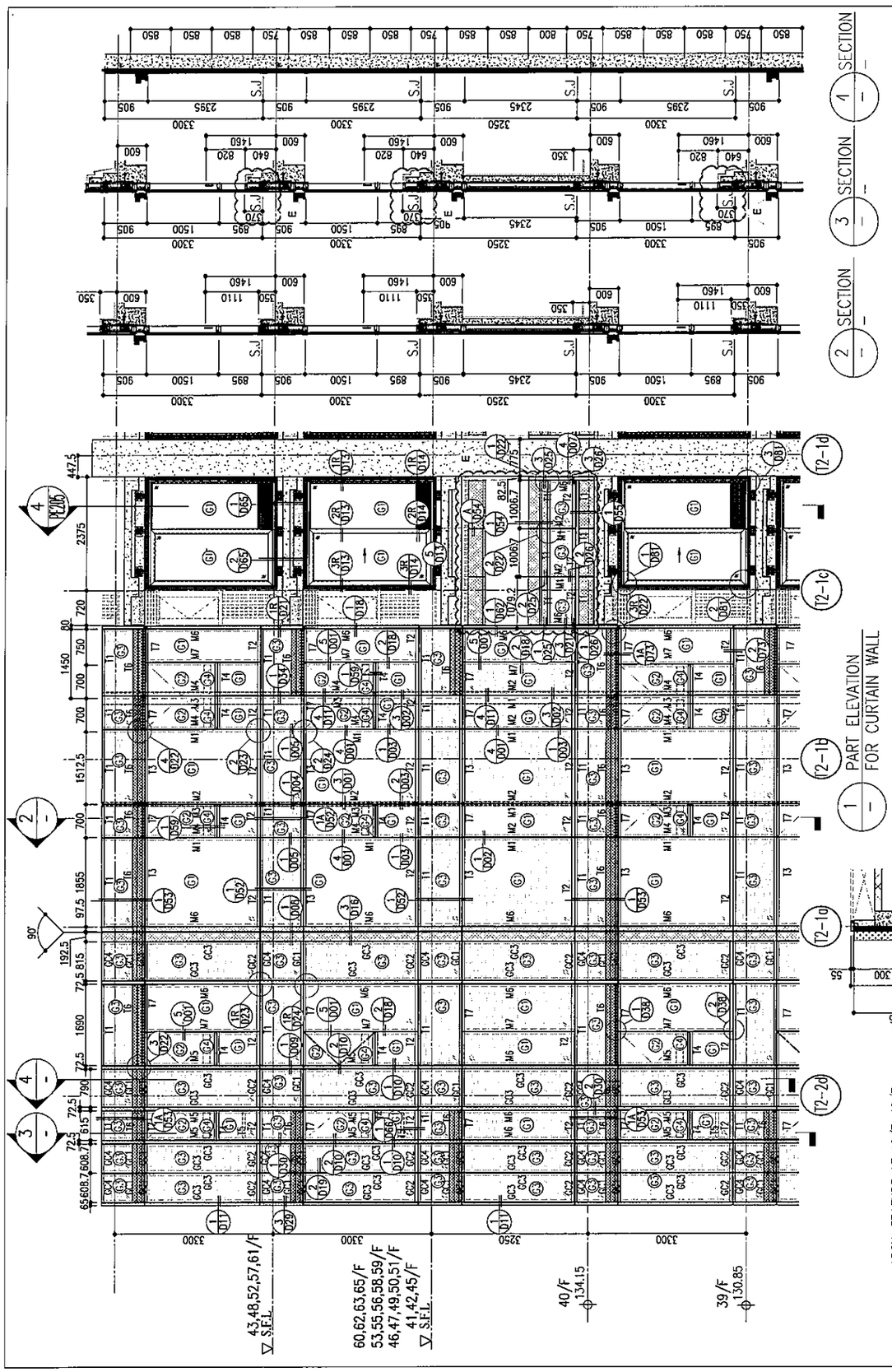

R/F	+217.00
67/F	+213.50
66/F	+210.00
65/F	+206.70
63/F	+203.40
62/F	+200.10
61/F	+196.80
60/F	+193.50
59/F	+190.20
58/F	+186.90
57/F	+183.60
56/F	+180.30
55/F	+177.00
53/F	+173.70
52/F	+170.40
51/F	+167.10
50/F	+163.80
49/F	+160.50
48/F	+157.20
47/F	+153.90
46/F	+150.60
45/F	+147.30
43/F	+144.00
42/F	+140.70
41/F	+137.40
40/F	+134.15
39/F	+130.85
33/F	+114.35
32/F	+111.05
31/F	107.75
30/F	+104.45
29/F	+101.15
28/F	+97.85
27/F	+94.55
26/F	+91.25
25/F	+87.95
23/F	+84.65
22/F	+81.35
21/F	+78.05
20/F	+74.75
19/F	+71.45
18/F	+68.15
17/F	+64.85
16/F	+61.55
15/F	+58.25
12/F	+54.95

LEGEND:

- (G) 10mm THK. HEAT STRENGTHENED GLASS (OUTSIDE) +12mm AIR SPACE + 12mm THK. TEMPERED GLASS
- (G) 10mm THK. HEAT STRENGTHENED GLASS (OUTSIDE) +12mm AIR SPACE + 10mm THK. TEMPERED GLASS
- (G) 12mm THK. HEAT STRENGTHENED GLASS
- (G) 12mm THK. CLEAR TEMPERED GLASS (INTERNAL PROTECTIVE BARRIER)
- (G) 10mm BLUE TINTED HEAT STRENGTHENED GLASS
- (G) 10mm THK. CLEAR TEMPERED GLASS
- (G) 8mm THK. CLEAR HEAT-STRENGTHENED GLASS + 2mm PVB + 8mm THK. CLEAR HEAT STRENGTHENED GLASS
- 3 mm THK. ALUM. CLADDING
- 3 mm THK. ALUM. BACKPAN
- S.J. – STACK JOINT

DELETED

DELETED

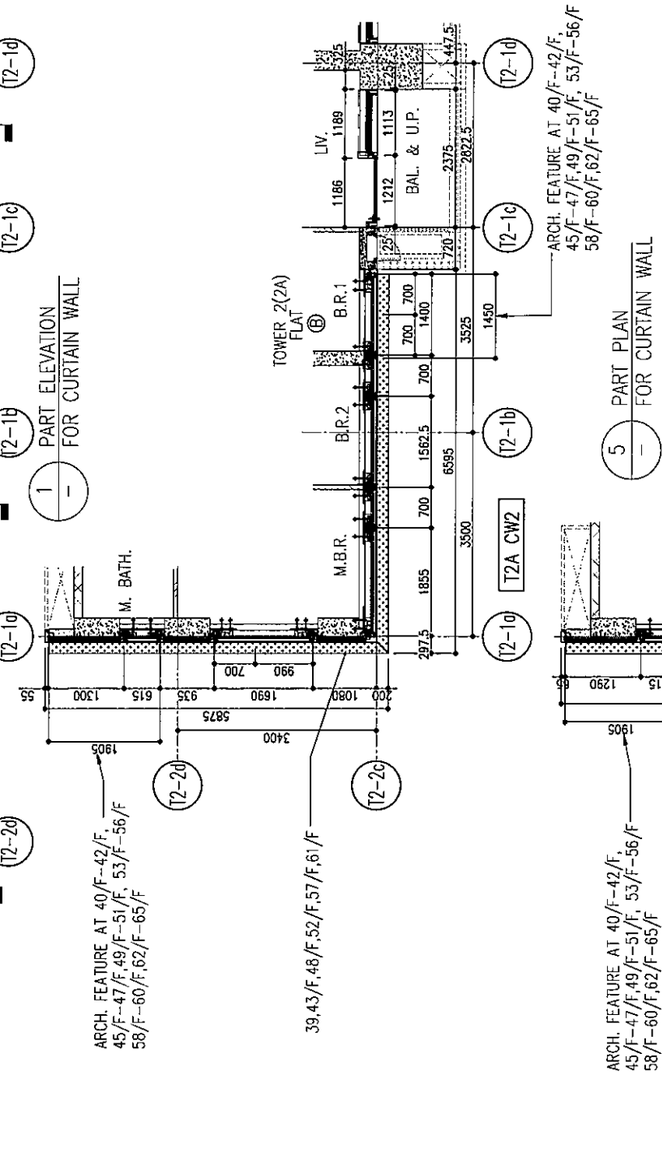

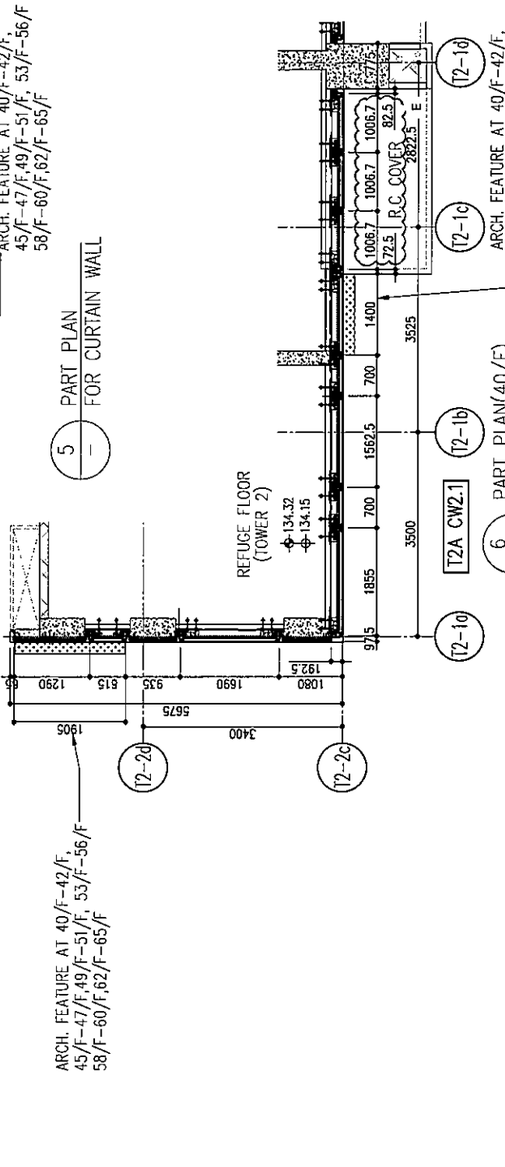

B.D. REF :

CLIENT :
信和置業有限公司
Sino Land Company Limited

ARCHITECT :
ronald lu & partners
Architects . Planners . Interior Designers
Ronald Lu & Partners (HK) Ltd.
呂元祥建築師事務所(香港)有限公司

MAIN CONTRACTOR :
Gammon

STRUCTURAL ENGINEER :
AECOM

FACADE CONSULTANT:
AECOM

NOTE :
1. ALL DIMENSIONS ARE IN mm.
2. ALL ELEVATIONS ARE VIEWED FROM OUTSIDE.
3. ALL DIMENSIONS TO BE VERIFIED ON SITE BEFORE FABRICATION.

LEGEND :
- (X1 / K001) DETAIL MARK NO. / REFER SHEET NO.
1. F.F.L. --FINISHED FLOOR LEVEL
2. S.F.L. --STRUCTURAL FLOOR LEVEL
3. (R) --REVERSED DETAIL

NO.	DATE	REVISED	BY
E	26/05/22	REVISED AS PER COMMENTS	LS
D	06/04/22	REVISED AS PER COMMENTS	LS
C	22/01/22	REVISED AS PER COMMENTS	LS
B	20/12/21	REVISED AS PER COMMENTS	LS
A	03/12/21	REVISED AS PER COMMENTS	LS

JOB NO. : J-858

PROJECT :
PROPOSED RESIDENTIAL DEVELOPMENT AT TKOTL 70RP, PHASE 11, LOHAS PARK TSEUNG KWAN O, N.T.

TITLE :
TYPICAL FLOOR PARTIAL ELEVATION & SECTION, PLAN FOR CURTAIN WALL (TOWER 2)

DATE : 20-OCT-21 | SCALE : 1:50(A1)

DRAWN BY : | CHECKED BY :

美特鋁質有限公司
MIDI ALUMINIUM FABRICATOR LTD.
Units 6-8, Sunray Industrial Centre, 1/F
610 Cha Kwo Ling Road, Kowloon
Tel:23489211-4 Fax:(852)27727666

DWG NO. : J858-CW-PE204 | REV. : E

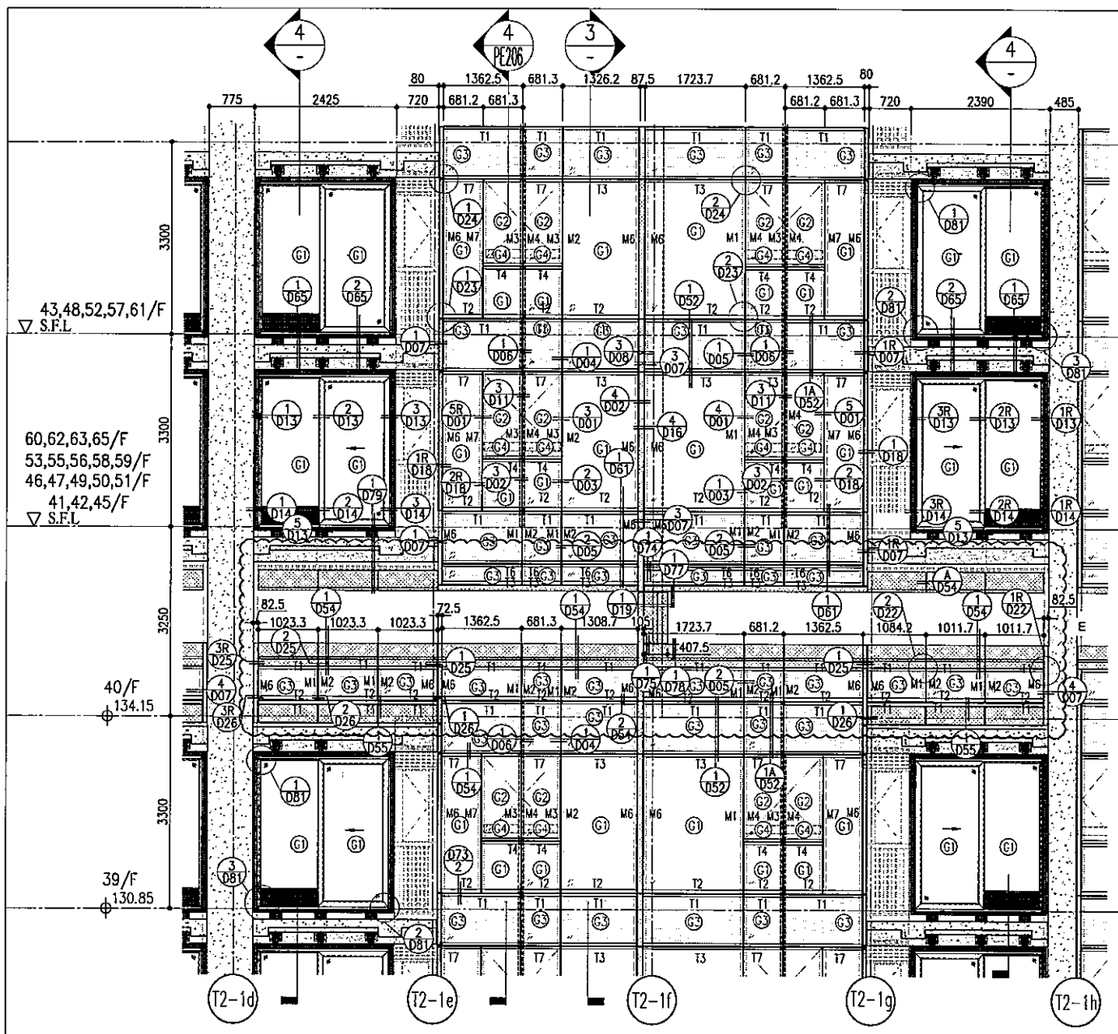

1 / – PART ELEVATION FOR CURTAIN WALL

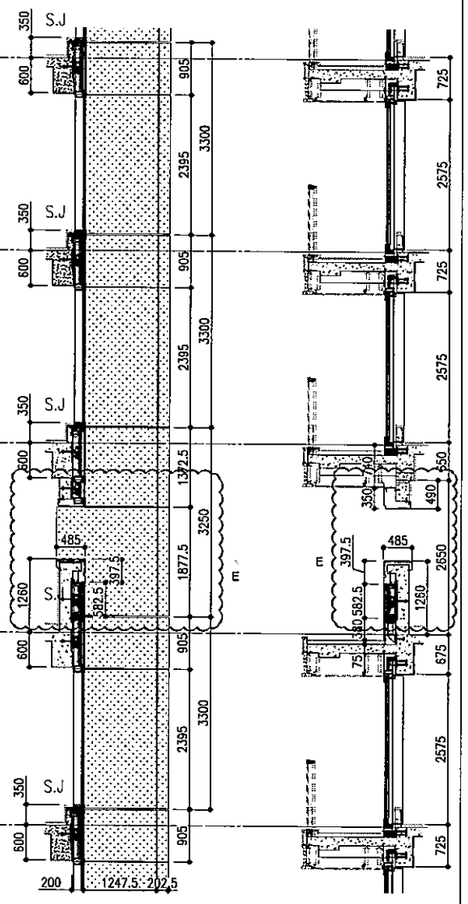

3 / – SECTION

4 / – SECTION

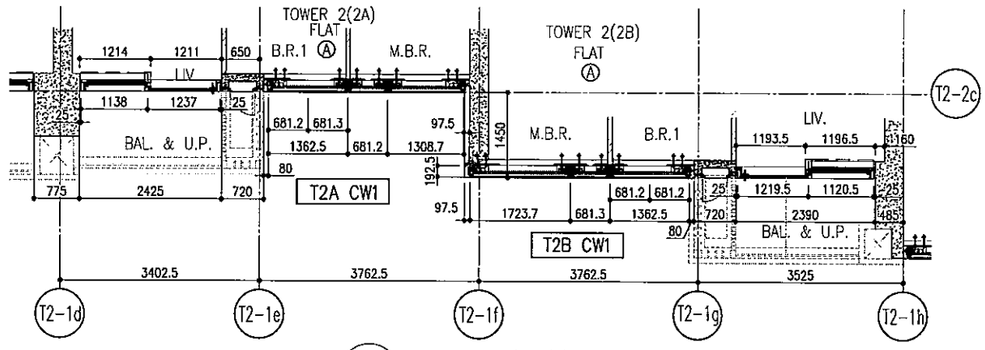

5 / – PART PLAN(39/F) FOR CURTAIN WALL

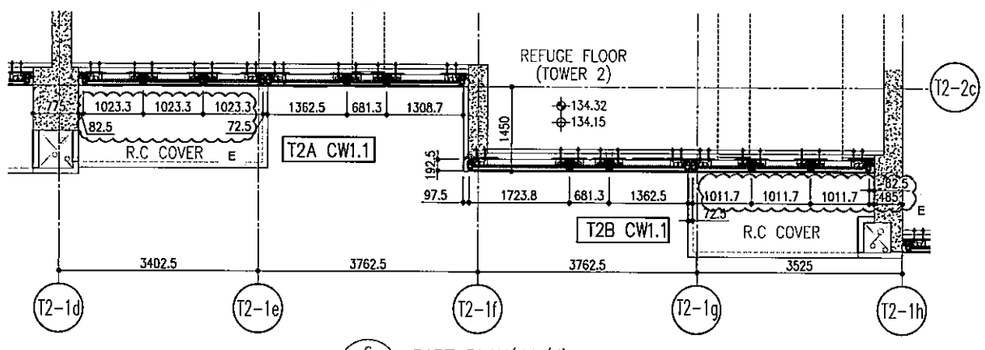

6 / – PART PLAN(40/F) FOR CURTAIN WALL

						R/F	+217.00
						67/F	+213.50
26/F	+91.25	39/F	+130.85	52/F	+170.40	66/F	+210.00
25/F	+87.95	38/F	+127.55	51/F	+167.10	65/F	+206.70
23/F	+84.65	37/F	+124.25	50/F	+163.80	63/F	+203.40
22/F	+81.35	36/F	+120.95	49/F	+160.50	62/F	+200.10
21/F	+78.05	35/F	+117.65	48/F	+157.20	61/F	+196.80
20/F	+74.75	33/F	+114.35	47/F	+153.90	60/F	+193.50
19/F	+71.45	32/F	+111.05	46/F	+150.60	59/F	+190.20
18/F	+68.15	31/F	107.75	45/F	+147.30	58/F	+186.90
17/F	+64.85	30/F	+104.45	43/F	+144.00	57/F	+183.60
16/F	+61.55	29/F	+101.15	42/F	+140.70	56/F	+180.30
15/F	+58.25	28/F	+97.85	41/F	+137.40	55/F	+177.00
12/F	+54.95	27/F	+94.55	40/F	+134.15	53/F	+173.70

LEGEND:

- G1 – 10mm THK. HEAT STRENGTHENED GLASS (OUTSIDE) +12mm AIR SPACE + 12mm THK. TEMPERED GLASS
- G2 – 10mm THK. HEAT STRENGTHENED GLASS (OUTSIDE) +12mm AIR SPACE + 10mm THK. TEMPERED GLASS
- G3 – 12mm THK. HEAT STRENGTHENED GLASS
- G4 – 12mm THK. CLEAR TEMPERED GLASS (INTERNAL PROTECTIVE BARRIER)
- G5 – 10mm BLUE TINTED HEAT STRENGTHENED GLASS DELETED
- S1 – 10mm THK. CLEAR TEMPERED GLASS DELETED
- S5 – 8mm THK. CLEAR HEAT-STRENGTHENED GLASS + 2mm PVB + 8mm THK. CLEAR HEAT-STRENGTHENED GLASS DELETED
- 3 mm THK. ALUM. CLADDING
- 3 mm THK. ALUM. BACKPAN
- S.J. – STACK JOINT

NOTE:
1. ALL DIMENSIONS ARE IN mm.
2. ALL ELEVATIONS ARE VIEWED FROM OUTSIDE.
3. ALL DIMENSIONS TO BE VERIFIED ON SITE BEFORE FABRICATION.

LEGEND:
X1 (X99) — DETAIL MARK NO. / REFER SHEET NO.
1. F.F.L. --FINISHED FLOOR LEVEL
2. S.F.L. --STRUCTURAL FLOOR LEVEL
3. (/R) --REVERSED DETAIL

NO.	DATE	REMARKS	BY
E	26/05/22	REVISED AS PER COMMENTS	LS
D	06/04/22	REVISED AS PER COMMENTS	LS
C	22/01/22	REVISED AS PER COMMENTS	LS
B	20/12/21	REVISED AS PER COMMENTS	LS
A	03/12/21	REVISED AS PER COMMENTS	LS

JOB NO. : J-858

PROJECT :
PROPOSED RESIDENTIAL DEVELOPMENT
AT TKOTL 70RP, PHASE 11, LOHAS PARK
TSEUNG KWAN O, N.T.

TITLE :
TYPICAL FLOOR PARTIAL
ELEVATION & SECTION, PLAN
FOR CURTAIN WALL (TOWER 2)

DATE : 20-OCT-21 | SCALE : 1:50(A1)
DRAWN BY : | CHECKED BY :
DWG NO. : J858-CW-PE205 | REV. : E

美特鋁質有限公司
MIDI ALUMINIUM FABRICATOR LTD.
Units 6-8, Sunray Industrial Centre, 1/F
610 Cha Kwo Ling Road, Kowloon
Tel:23489211-4 Fax:(852)27727666

CLIENT : 信和置業有限公司 Sino Land Company Limited

ARCHITECT : ronald lu & partners Architects, Planners, Interior Designers Ronald Lu & Partners (HK) Ltd. 呂元祥建築師事務所(香港)有限公司

MAIN CONTRACTOR : Gammon

STRUCTURAL ENGINEER : AECOM

FACADE CONSULTANT : AECOM

B.D. REF :

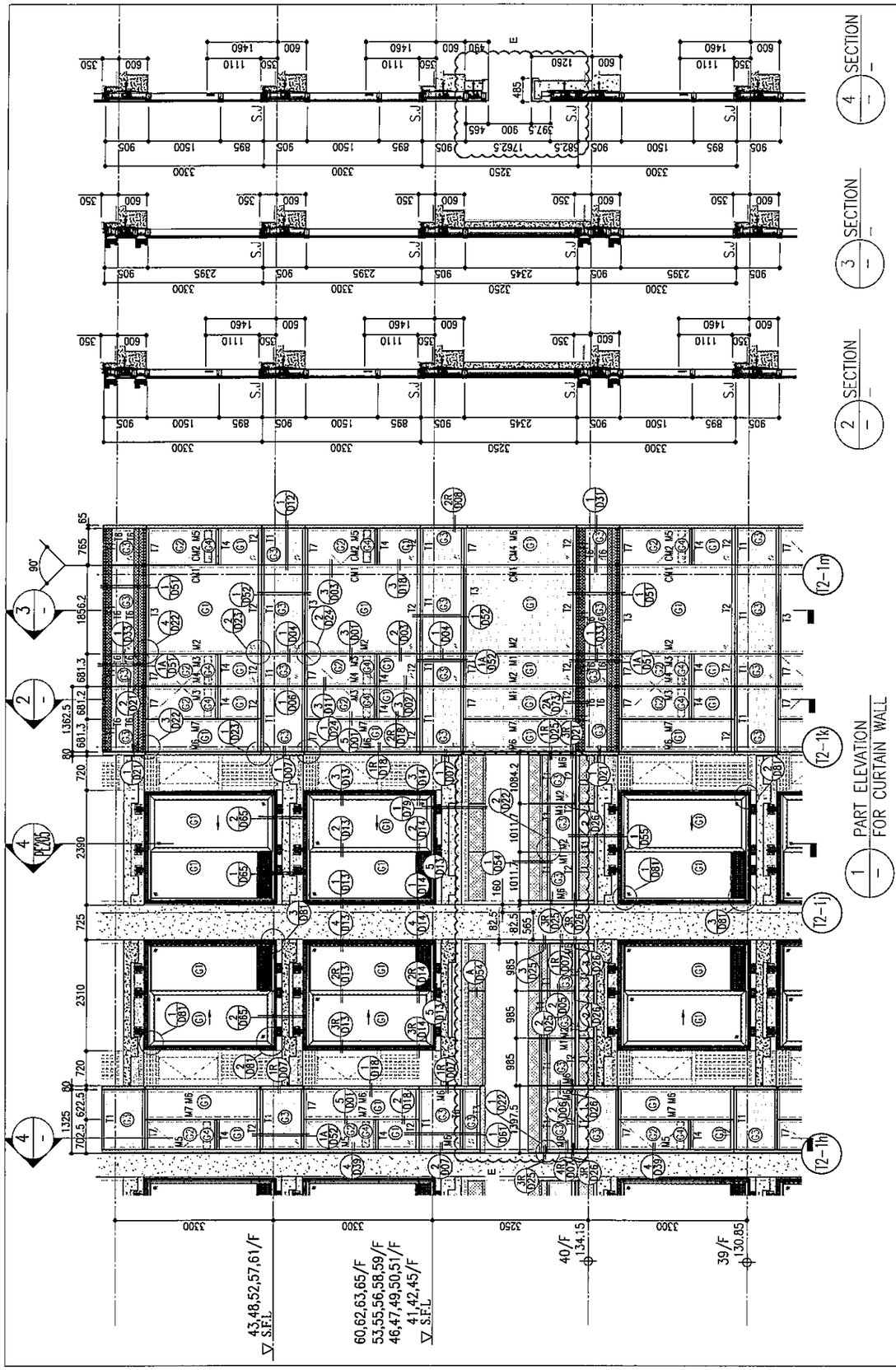

R/F	+217.00
67/F	+213.50
66/F	+210.00
65/F	+206.70
64/F	+203.40
63/F	+200.10
62/F	+196.80
61/F	+193.50
60/F	+190.20
59/F	+186.90
58/F	+183.60
57/F	+180.30
56/F	+177.00
55/F	+173.70
53/F	+170.40
52/F	+167.10
51/F	+163.80
50/F	+160.50
49/F	+157.20
48/F	+153.90
47/F	+150.60
46/F	+147.30
45/F	+144.00
43/F	+140.70
42/F	+137.40
41/F	+134.15
40/F	+130.85
39/F	+127.55
38/F	+124.25
37/F	+120.95
36/F	+117.65
35/F	+114.35
33/F	+111.05
32/F	+107.75
31/F	+104.45
30/F	+101.15
29/F	+97.85
28/F	+94.55
27/F	+91.25
26/F	+87.95
25/F	+84.65
23/F	+81.35
22/F	+78.05
21/F	+74.75
20/F	+71.45
19/F	+68.15
18/F	+64.85
17/F	+61.55
16/F	+58.25
15/F	+54.95
12/F	+91.25

LEGEND:

- 10mm THK. HEAT STRENGTHENED GLASS (OUTSIDE) +12mm AIR SPACE + 12mm THK. TEMPERED GLASS
- 10mm THK. HEAT STRENGTHENED GLASS (OUTSIDE) +12mm AIR SPACE + 10mm THK. TEMPERED GLASS
- 12mm THK. HEAT STRENGTHENED GLASS
- 12mm THK. CLEAR TEMPERED GLASS (INTERNAL PROTECTIVE BARRIER)
- 10mm BLUE TINTED HEAT STRENGTHENED GLASS (DELETED)
- 10mm THK. CLEAR TEMPERED GLASS (DELETED)
- 8mm THK. CLEAR HEAT-STRENGTHENED GLASS + 2mm PVB + 8mm THK. CLEAR HEAT STRENGTHENED GLASS
- 3 mm THK. ALUM. CLADDING
- S.J. – STACK JOINT

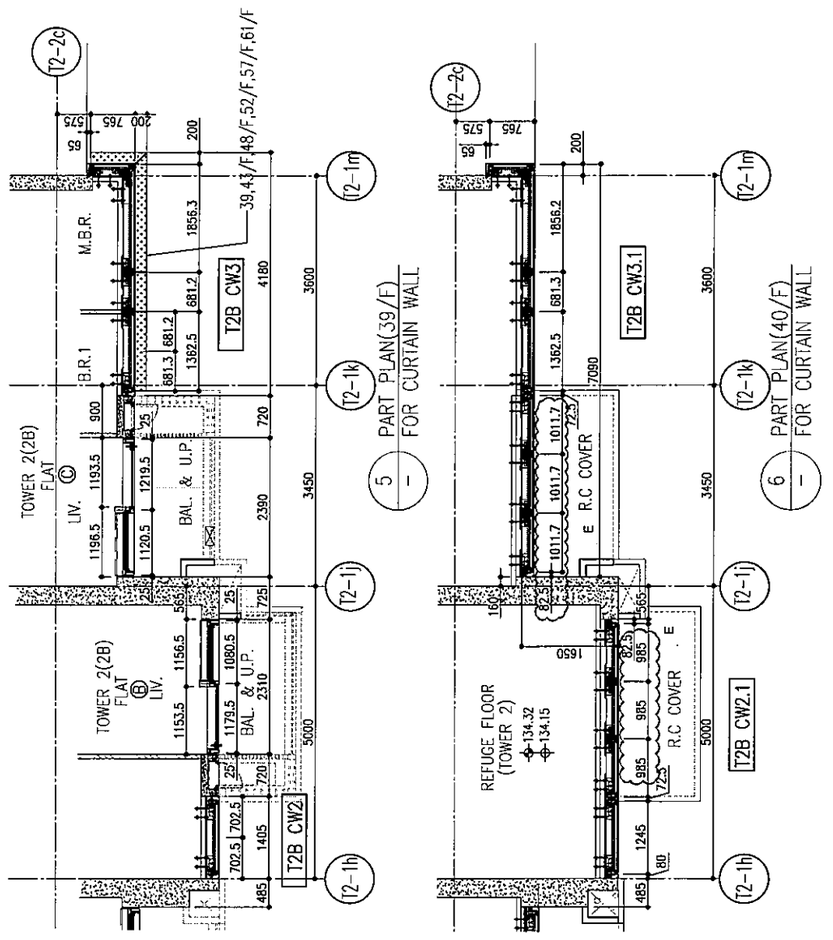

B.D. REF :

CLIENT :
信和置業有限公司
Sino Land Company Limited

ARCHITECT :
ronald lu & partners
Architects · Planners · Interior Designers
Ronald Lu & Partners (HK) Ltd.
呂元祥建築師事務所(香港)有限公司

MAIN CONTRACTOR :
Gammon

STRUCTURAL ENGINEER :
AECOM

FACADE CONSULTANT:
AECOM

NOTE :
1. ALL DIMENSIONS ARE IN mm.
2. ALL ELEVATIONS ARE VIEWED FROM OUTSIDE.
3. ALL DIMENSIONS TO BE VERIFIED ON SITE BEFORE FABRICATION.

LEGEND :
- X1 / X001 — DETAIL MARK NO. / REFER SHEET NO.
1. F.F.L. --FINISHED FLOOR LEVEL
2. S.F.L. --STRUCTURAL FLOOR LEVEL
3. /R --REVERSED DETAIL

NO.	DATE	REVISED	BY
E	26/05/22	REVISED AS PER COMMENTS	LS
D	06/04/22	REVISED AS PER COMMENTS	LS
C	22/01/22	REVISED AS PER COMMENTS	LS
B	20/12/21	REVISED AS PER COMMENTS	LS
A	03/12/21	REVISED AS PER COMMENTS	LS

JOB NO. : J-858

PROJECT :
PROPOSED RESIDENTIAL DEVELOPMENT AT TKOTL 70RP, PHASE 11, LOHAS PARK TSEUNG KWAN O, N.T.

TITLE :
TYPICAL FLOOR PARTIAL ELEVATION & SECTION, PLAN FOR CURTAIN WALL (TOWER 2)

DATE : 20-OCT-21 | SCALE : 1:50(A1)

DRAWN BY : | CHECKED BY :

美特鋁製有限公司
MIDI ALUMINIUM FABRICATOR LTD.
Units 6-8, Sunray Industrial Centre, 1/F
610 Cha Kwo Ling Road, Kowloon
Tel:23489211-4 Fax:(852)27727666

DWG NO. : J858-CW-PE206 | REV. : E

R/F	+217.00										
67/F	+213.50										
66/F	+210.00										
65/F	+206.70										
63/F	+203.40										
62/F	+200.10										
61/F	+196.80										
60/F	+193.50										
59/F	+190.20										
58/F	+186.90										
57/F	+183.60										
56/F	+180.30										
55/F	+177.00										
53/F	+173.70										
		52/F	+170.40								
		51/F	+167.10								
		50/F	+163.80								
		49/F	+160.50								
		48/F	+157.20								
		47/F	+153.90								
		46/F	+150.60								
		45/F	+147.30								
		43/F	+144.00								
		42/F	+140.70								
		41/F	+137.40								
		40/F	+134.15								
				39/F	+130.85						
				38/F	+127.55						
				37/F	+124.25						
				36/F	+120.95						
				35/F	+117.65						
				33/F	+114.35						
				32/F	+111.05						
				31/F	107.75						
				30/F	+104.45						
				29/F	+101.15						
				28/F	+97.85						
				27/F	+94.55						
						26/F	+91.25				
						25/F	+87.95				
						23/F	+84.65				
						22/F	+81.35				
						21/F	+78.05				
						20/F	+74.75				
						19/F	+71.45				
						18/F	+68.15				
						17/F	+64.85				
						16/F	+61.55				
						15/F	+58.25				
						12/F	+54.95				

LEGEND:

- 10mm THK. HEAT STRENGTHENED GLASS (OUTSIDE) + 12mm AIR SPACE + 12mm THK. TEMPERED GLASS
- 10mm THK. HEAT STRENGTHENED GLASS (OUTSIDE) + 12mm AIR SPACE + 10mm THK. TEMPERED GLASS
- 12mm THK. HEAT STRENGTHENED GLASS
- 12mm THK. CLEAR TEMPERED GLASS (INTERNAL PROTECTIVE BARRIER)
- 10mm BLUE TINTED HEAT STRENGTHENED GLASS
- 10mm THK. CLEAR TEMPERED GLASS
- 8mm THK. CLEAR HEAT-STRENGTHENED GLASS + 2mm PVB + 8mm THK. CLEAR HEAT STRENGTHENED GLASS
- 3 mm THK. ALUM. CLADDING
- 3 mm THK. ALUM. BACKPAN
- S.J. – STACK JOINT

2 SECTION – –

3 SECTION – –

4 SECTION – –

5 SECTION – –

6 SECTION – –

1 PART ELEVATION FOR CURTAIN WALL – –

7 PART PLAN FOR CURTAIN WALL – –

8 PART PLAN(11/F) FOR CURTAIN WALL – –

ARCH. FEATURE AT 11/F,17/F,21/F,26/F,30/F,35/F.

17,21,26,30,35/F ▽ S.F.L.

36,37,38/F 27,28,29,31,32,33,/F 18,19,20,22,23,25/F 12,15,16/F ▽ S.F.L.

11/F 51.70

10/F 48.40

9/F 45.10

TOWER 2B FLAT ①

31500L DRENCHER WATER TANK

REFUGE FLOOR (TOWER 2) 51.87 51.70

T2B CW4

T2B CW4.1

T2B CW5

T2B CW5.1

B.D. REF :

CLIENT :
信和置業有限公司
Sino Land Company Limited

ARCHITECT :
ronald lu & partners
Architects . Planners . Interior Designers
Ronald Lu & Partners (HK) Ltd.
呂元祥建築師事務所(香港)有限公司

MAIN CONTRACTOR :
Gammon

STRUCTURAL ENGINEER :
AECOM

FACADE CONSULTANT:
AECOM

NOTE :
1. ALL DIMENSIONS ARE IN mm.
2. ALL ELEVATIONS ARE VIEWED FROM OUTSIDE.
3. ALL DIMENSIONS TO BE VERIFIED ON SITE BEFORE FABRICATION.

LEGEND :
- X1 / X001 – DETAIL MARK NO. / REFER SHEET NO.
1. F.F.L. – FINISHED FLOOR LEVEL
2. S.F.L. – STRUCTURAL FLOOR LEVEL
3. (R) – REVERSED DETAIL

NO.	DATE	REVISED	BY
E	26/05/22	REVISED AS PER COMMENTS	LS
D	06/04/22	REVISED AS PER COMMENTS	LS
C	22/01/22	REVISED AS PER COMMENTS	LS
B	20/12/21	REVISED AS PER COMMENTS	LS
A	03/12/21	REVISED AS PER COMMENTS	LS

JOB NO. : J-858

PROJECT :
PROPOSED RESIDENTIAL DEVELOPMENT AT TKOTL 70RP, PHASE 11, LOHAS PARK TSEUNG KWAN O, N.T.

TITLE :
TYPICAL FLOOR PARTIAL ELEVATION & SECTION, PLAN FOR CURTAIN WALL (TOWER 2)

DATE : 20-OCT-21 | SCALE : 1:50(A1)

DRAWN BY : | CHECKED BY :

美特鋁質有限公司
MIDI ALUMINIUM FABRICATOR LTD.
Units 6-8, Sunray Industrial Centre, 1/F
610 Cho Kwo Ling Road, Kowloon
Tel:23489211-4 Fax:(852)27727666

DWG NO. : J858-CW-PE207 | REV. : E

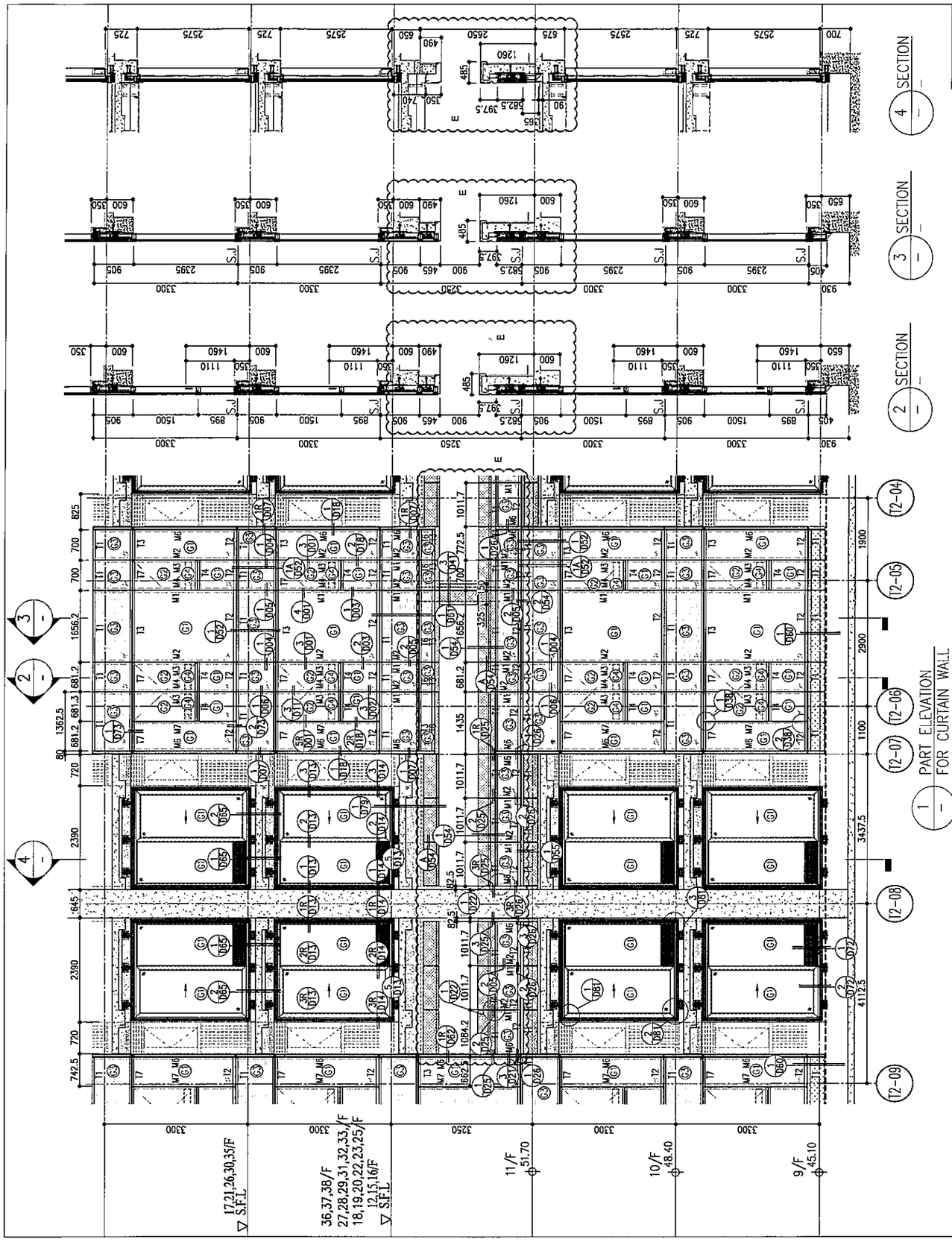

R/F	+217.00
67/F	+213.50
66/F	+210.00
65/F	+206.70
64/F	+203.40
63/F	+200.10
62/F	+196.80
61/F	+193.50
60/F	+190.20
59/F	+186.90
58/F	+183.60
57/F	+180.30
56/F	+177.00
55/F	+173.70
53/F	+170.40
52/F	+167.10
51/F	+163.80
50/F	+160.50
49/F	+157.20
48/F	+153.90
47/F	+150.60
46/F	+147.30
45/F	+144.00
43/F	+140.70
42/F	+137.40
41/F	+134.15
40/F	+130.85
39/F	+127.55
38/F	+124.25
37/F	+120.95
36/F	+117.65
35/F	+114.35
33/F	+111.05
32/F	107.75
31/F	+104.45
30/F	+101.15
29/F	+97.85
28/F	+94.55
27/F	+91.25
26/F	+87.95
25/F	+84.65
23/F	+81.35
22/F	+78.05
21/F	+74.75
20/F	+71.45
19/F	+68.15
18/F	+64.85
17/F	+61.55
16/F	+58.25
15/F	+54.95
12/F	

LEGEND:

- (G1) 10mm THK. HEAT STRENGTHENED GLASS (OUTSIDE) +12mm AIR SPACE + 12mm THK. TEMPERED GLASS
- (G2) 10mm THK. HEAT STRENGTHENED GLASS (OUTSIDE) +12mm AIR SPACE + 10mm THK. TEMPERED GLASS
- (G3) – 12mm THK. HEAT STRENGTHENED GLASS
- (G4) – 12mm THK. CLEAR TEMPERED GLASS (INTERNAL PROTECTIVE BARRIER)
- (G5) 10mm BLUE TINTED HEAT STRENGTHENED GLASS DELETED
- (G6) – 10mm THK. CLEAR TEMPERED GLASS DELETED
- (G7) – 8mm THK. CLEAR HEAT-STRENGTHENED GLASS +2mm PVB + 8mm THK. CLEAR HEAT STRENGTHENED GLASS
- – 3 mm THK. ALUM. CLADDING
- – 3 mm THK. ALUM. BACKPAN
- S.J. – STACK JOINT

B.D. REF :

CLIENT :
信和置業有限公司
Sino Land Company Limited

ARCHITECT :
ronald lu & partners
Architects · Planners · Interior Designers
Ronald Lu & Partners (HK) Ltd.
呂元祥建築師事務所(香港)有限公司

MAIN CONTRACTOR :
Gammon

STRUCTURAL ENGINEER :
AECOM

FACADE CONSULTANT:
AECOM

NOTE :
1. ALL DIMENSIONS ARE IN mm.
2. ALL ELEVATIONS ARE VIEWED FROM OUTSIDE.
3. ALL DIMENSIONS TO BE VERIFIED ON SITE BEFORE FABRICATION.

LEGEND :
- X1 / X001 — DETAIL MARK NO. / REFER SHEET NO.
1. F.F.L. --FINISHED FLOOR LEVEL
2. S.F.L. --STRUCTURAL FLOOR LEVEL
3. (R) --REVERSED DETAIL

NO.	DATE	REVISED	BY
E	26/05/22	REVISED AS PER COMMENTS	LS
D	06/04/22	REVISED AS PER COMMENTS	LS
C	22/01/22	REVISED AS PER COMMENTS	LS
B	20/12/21	REVISED AS PER COMMENTS	LS
A	03/12/21	REVISED AS PER COMMENTS	LS

JOB NO. : J-858

PROJECT :
PROPOSED RESIDENTIAL DEVELOPMENT AT TKOTL 70RP, PHASE 11, LOHAS PARK TSEUNG KWAN O, N.T.

TITLE :
TYPICAL FLOOR PARTIAL ELEVATION & SECTION, PLAN FOR CURTAIN WALL (TOWER 2)

DATE : 20-OCT-21 | SCALE : 1:50(A1)

DRAWN BY : | CHECKED BY :

美特鋁製有限公司
MIDI ALUMINIUM FABRICATOR LTD.
Units 6-8, Sunray Industrial Centre, 1/F
610 Cha Kwo Ling Road, Kowloon
Tel:23489211-4 Fax:(852)27727666

DWG NO. : J858-CW-PE208 | REV. : E

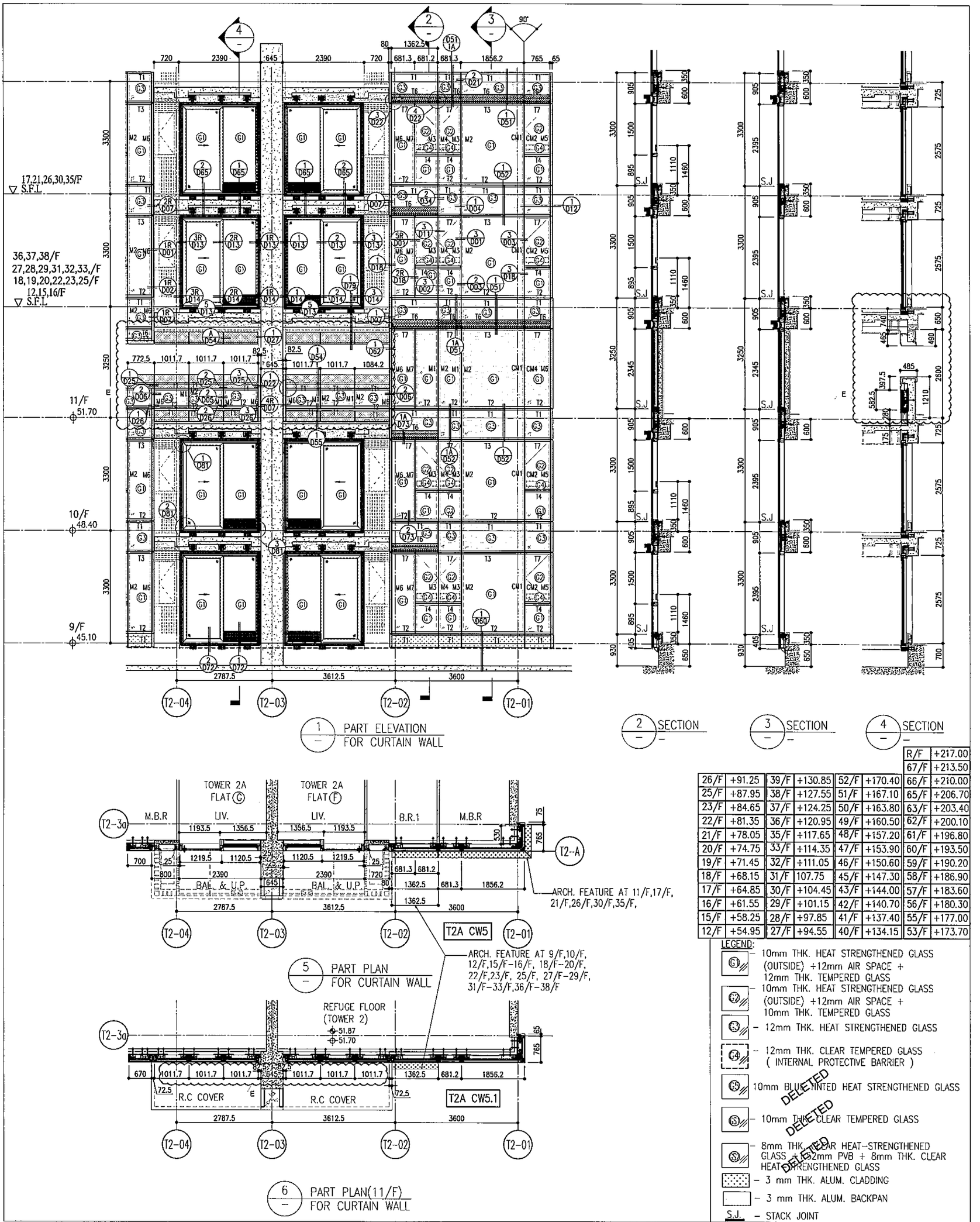

1 / – PART ELEVATION FOR CURTAIN WALL

2 / – SECTION –

3 / – SECTION –

4 / – SECTION –

5 / – PART PLAN FOR CURTAIN WALL

6 / – PART PLAN(11/F) FOR CURTAIN WALL

						R/F	+217.00
						67/F	+213.50
26/F	+91.25	39/F	+130.85	52/F	+170.40	66/F	+210.00
25/F	+87.95	38/F	+127.55	51/F	+167.10	65/F	+206.70
23/F	+84.65	37/F	+124.25	50/F	+163.80	63/F	+203.40
22/F	+81.35	36/F	+120.95	49/F	+160.50	62/F	+200.10
21/F	+78.05	35/F	+117.65	48/F	+157.20	61/F	+196.80
20/F	+74.75	33/F	+114.35	47/F	+153.90	60/F	+193.50
19/F	+71.45	32/F	+111.05	46/F	+150.60	59/F	+190.20
18/F	+68.15	31/F	107.75	45/F	+147.30	58/F	+186.90
17/F	+64.85	30/F	+104.45	43/F	+144.00	57/F	+183.60
16/F	+61.55	29/F	+101.15	42/F	+140.70	56/F	+180.30
15/F	+58.25	28/F	+97.85	41/F	+137.40	55/F	+177.00
12/F	+54.95	27/F	+94.55	40/F	+134.15	53/F	+173.70

LEGEND:

- G1 – 10mm THK. HEAT STRENGTHENED GLASS (OUTSIDE) +12mm AIR SPACE + 12mm THK. TEMPERED GLASS
- G2 – 10mm THK. HEAT STRENGTHENED GLASS (OUTSIDE) +12mm AIR SPACE + 10mm THK. TEMPERED GLASS
- G3 – 12mm THK. HEAT STRENGTHENED GLASS
- G4 – 12mm THK. CLEAR TEMPERED GLASS (INTERNAL PROTECTIVE BARRIER)
- G5 – 10mm BLUE TINTED HEAT STRENGTHENED GLASS
- G6 – 10mm THK. CLEAR TEMPERED GLASS DELETED
- G7 – 8mm THK. CLEAR HEAT-STRENGTHENED GLASS + 2mm PVB + 8mm THK. CLEAR HEAT STRENGTHENED GLASS DELETED
- – 3 mm THK. ALUM. CLADDING
- – 3 mm THK. ALUM. BACKPAN
- S.J. – STACK JOINT

NOTE :
1. ALL DIMENSIONS ARE IN mm.
2. ALL ELEVATIONS ARE VIEWED FROM OUTSIDE.
3. ALL DIMENSIONS TO BE VERIFIED ON SITE BEFORE FABRICATION.

LEGEND :
- X1 / XXX1 – DETAIL MARK NO. / REFER SHEET NO.
- 1. F.F.L. --FINISHED FLOOR LEVEL
- 2. S.F.L. --STRUCTURAL FLOOR LEVEL
- 3. (R) --REVERSED DETAIL

NO.	DATE	REVISED	BY
E	26/05/22	REVISED AS PER COMMENTS	LS
D	06/04/22	REVISED AS PER COMMENTS	LS
C	22/01/22	REVISED AS PER COMMENTS	LS
B	20/12/21	REVISED AS PER COMMENTS	LS
A	03/12/21	REVISED AS PER COMMENTS	LS

JOB NO. : J-858

PROJECT : PROPOSED RESIDENTIAL DEVELOPMENT AT TKOTL 70RP, PHASE 11, LOHAS PARK TSEUNG KWAN O, N.T.

TITLE : TYPICAL FLOOR PARTIAL ELEVATION & SECTION, PLAN FOR CURTAIN WALL (TOWER 2)

DATE : 20-OCT-21 | SCALE : 1:50(A1)

DRAWN BY : | CHECKED BY :

DWG NO. : J858-CW-PE209 | REV. : E

美特鋁廠有限公司 MIDI ALUMINIUM FABRICATION LTD.
Units 6-8, Sunray Industrial Centre, 1/F
610 Cha Kwo Ling Road, Kowloon
Tel:23489211-4 Fax:(852)27727666

FACADE CONSULTANT: AECOM

STRUCTURAL ENGINEER : AECOM

MAIN CONTRACTOR : Gammon

ARCHITECT : ronald lu & partners 呂元祥建築師事務所(香港)有限公司

CLIENT : 信和置業有限公司 Sino Land Company Limited

B.D. REF :

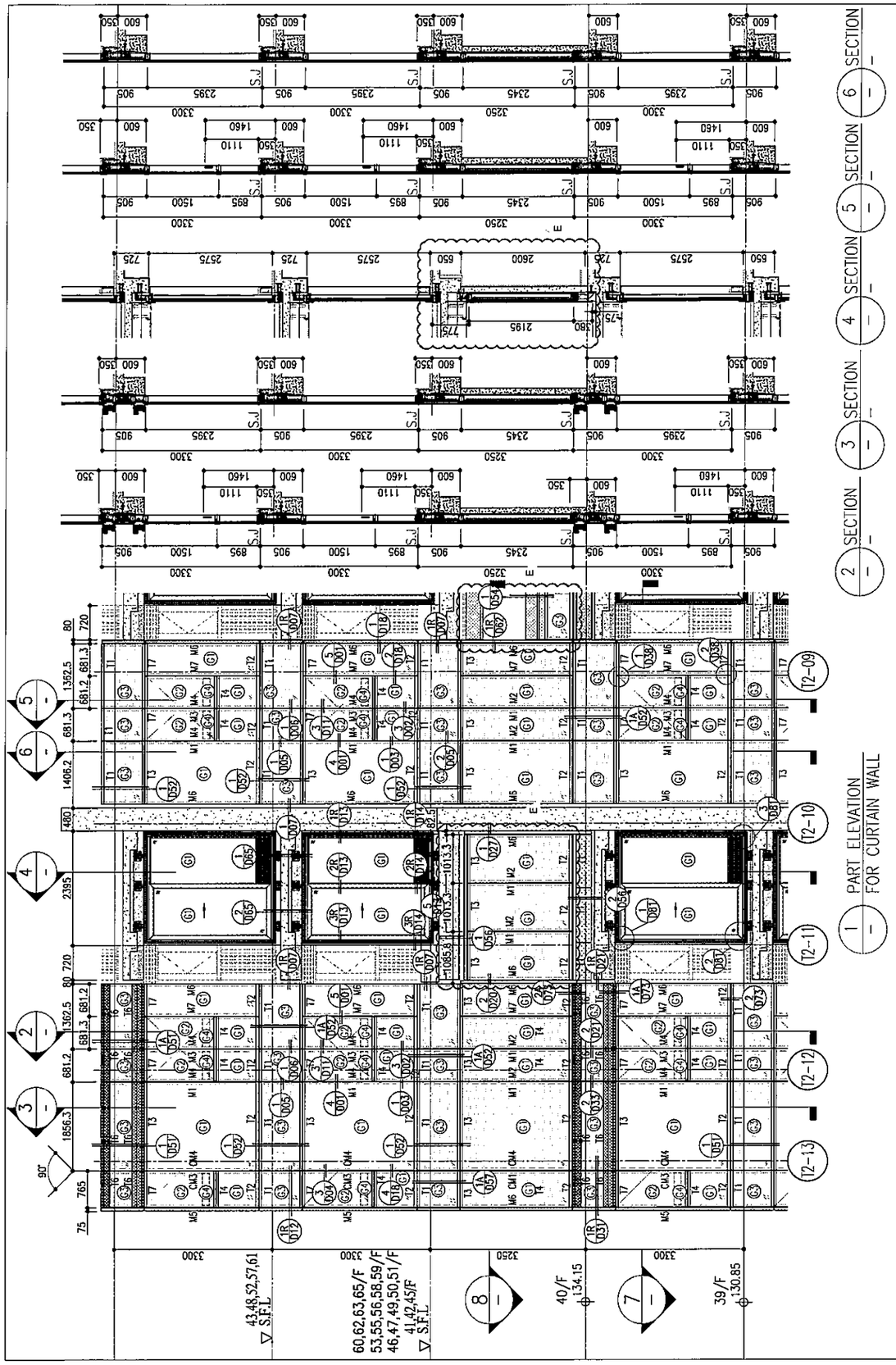

R/F	+217.00
67/F	+213.50
66/F	+210.00
65/F	+206.70
64/F	+203.40
63/F	+200.10
62/F	+196.80
61/F	+193.50
60/F	+190.20
59/F	+186.90
58/F	+183.60
57/F	+180.30
56/F	+177.00
55/F	+173.70
54/F	+170.40
53/F	+167.10
52/F	+163.80
51/F	+160.50
50/F	+157.20
49/F	+153.90
48/F	+150.60
47/F	+147.30
46/F	+144.00
45/F	+140.70
44/F	+137.40
43/F	+134.15
42/F	+130.85
41/F	+107.75
40/F	+104.45
39/F	+101.15
38/F	+97.85
37/F	+94.55
36/F	+91.25
35/F	+87.95
34/F	+84.65
33/F	+81.35
32/F	+78.05
31/F	+74.75
30/F	+71.45
29/F	+68.15
28/F	+64.85
27/F	+61.55
26/F	+58.25
25/F	+54.95
12/F	+91.25

LEGEND:

- 10mm THK. HEAT STRENGTHENED GLASS (OUTSIDE) + 12mm AIR SPACE + 12mm THK. TEMPERED GLASS
- 10mm THK. HEAT STRENGTHENED GLASS (OUTSIDE) + 12mm AIR SPACE + 10mm THK. TEMPERED GLASS
- 12mm THK. HEAT STRENGTHENED GLASS
- 12mm THK. CLEAR TEMPERED GLASS (INTERNAL PROTECTIVE BARRIER) DELETED
- 10mm BLUE TINTED HEAT STRENGTHENED GLASS DELETED
- 10mm THK. CLEAR TEMPERED GLASS
- 8mm THK. CLEAR HEAT-STRENGTHENED GLASS + 2mm PVB + 8mm THK. CLEAR HEAT-STRENGTHENED GLASS
- 3 mm THK. ALUM. CLADDING
- 3 mm THK. ALUM. BACKPAN
- STACK JOINT

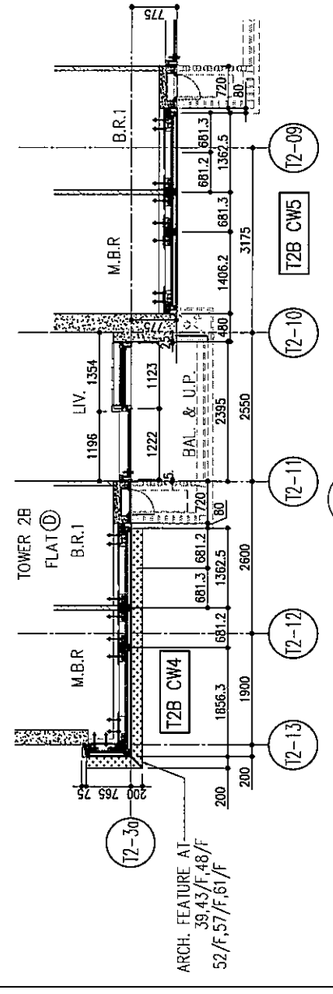

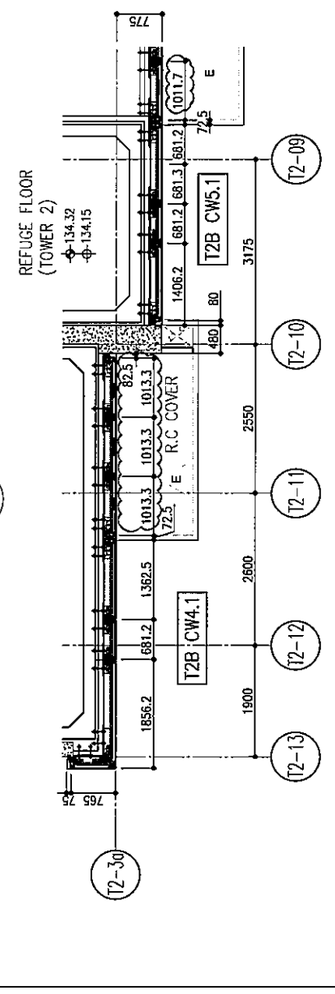

B.D. REF :

CLIENT :
信和置業有限公司
Sino Land Company Limited

ARCHITECT :
ronald lu & partners
Architects · Planners · Interior Designers
Ronald Lu & Partners (HK) Ltd.
呂元祥建築師事務所(香港)有限公司

MAIN CONTRACTOR :
Gammon

STRUCTURAL ENGINEER :
AECOM

FACADE CONSULTANT:
AECOM

NOTE :
1. ALL DIMENSIONS ARE IN mm.
2. ALL ELEVATIONS ARE VIEWED FROM OUTSIDE.
3. ALL DIMENSIONS TO BE VERIFIED ON SITE BEFORE FABRICATION.

LEGEND :
- X1 / X001 — DETAIL MARK NO. / REFER SHEET NO.
1. F.F.L. --FINISHED FLOOR LEVEL
2. S.F.L. --STRUCTURAL FLOOR LEVEL
3. (R) --REVERSED DETAIL

NO.	DATE	REVISED	BY
E	26/05/22	REVISED AS PER COMMENTS	LS
D	06/04/22	REVISED AS PER COMMENTS	LS
C	22/01/22	REVISED AS PER COMMENTS	LS
B	20/12/21	REVISED AS PER COMMENTS	LS
A	03/12/21	REVISED AS PER COMMENTS	LS

JOB NO. : J-858

PROJECT :
PROPOSED RESIDENTIAL DEVELOPMENT AT TKOTL 70RP, PHASE 11, LOHAS PARK TSEUNG KWAN O, N.T.

TITLE :
TYPICAL FLOOR PARTIAL ELEVATION & SECTION, PLAN FOR CURTAIN WALL (TOWER 2)

DATE : 20-OCT-21 | SCALE : 1:50(A1)

DRAWN BY : | CHECKED BY :

美特鋁質有限公司
MIDI ALUMINIUM FABRICATOR LTD.
Units 6-8, Sunray Industrial Centre, 1/F
610 Cha Kwo Ling Road, Kowloon
Tel:23489211-4 Fax:(852)27727666

DWG NO. : J858--CW--PE210 | REV. : E

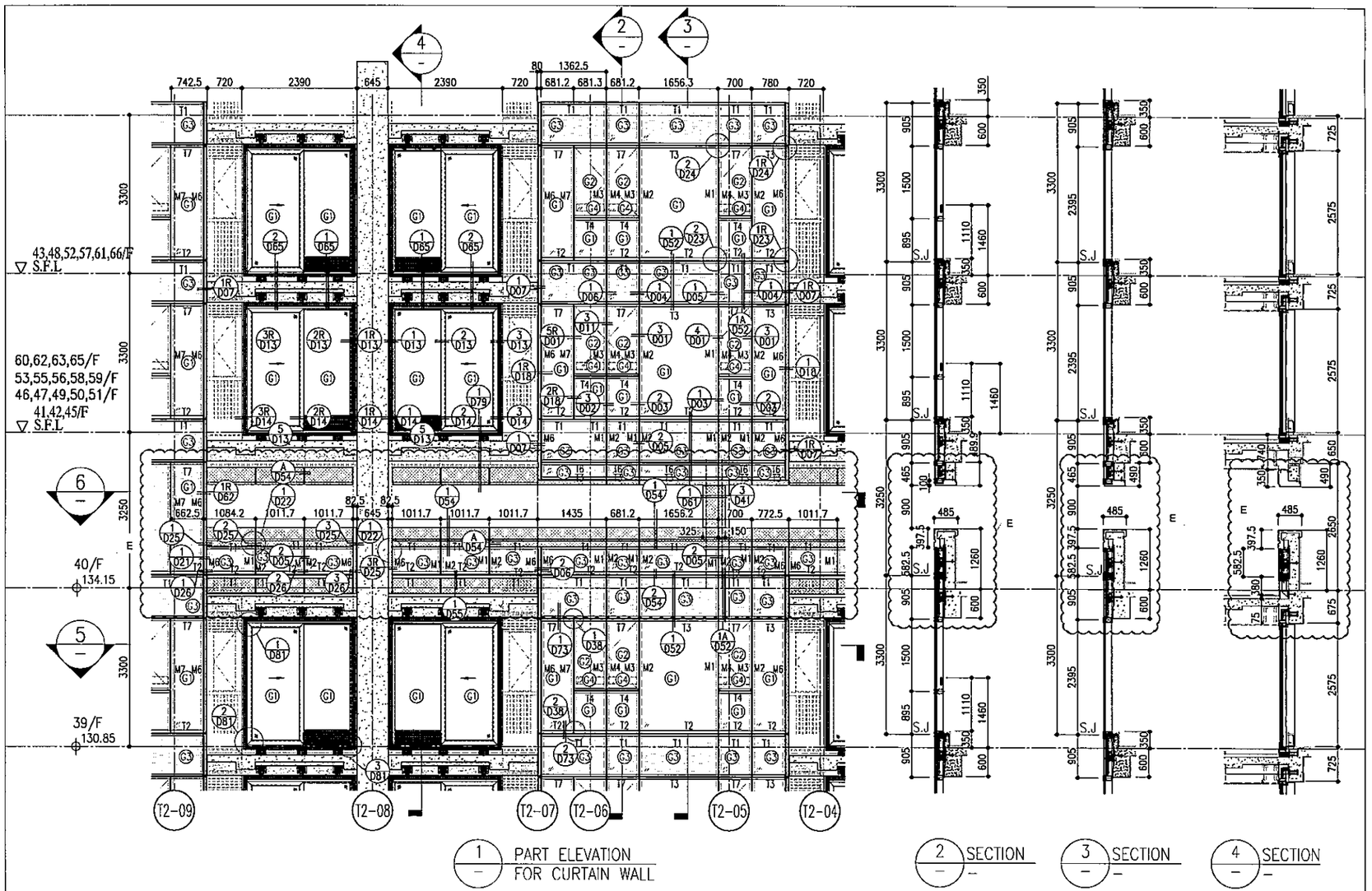

1 — PART ELEVATION FOR CURTAIN WALL

2 — SECTION

3 — SECTION

4 — SECTION

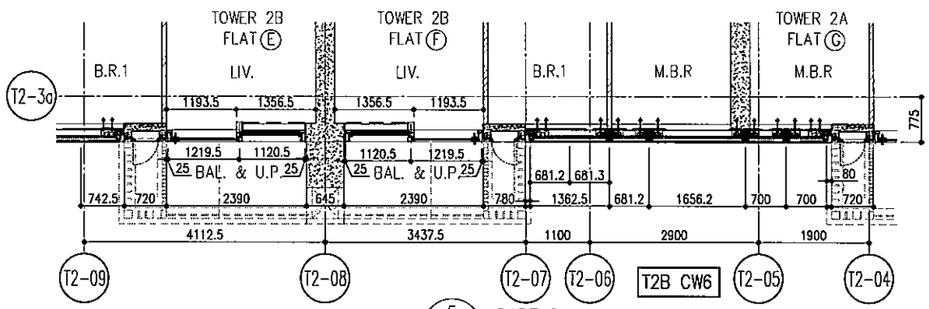

5 — PART PLAN FOR CURTAIN WALL

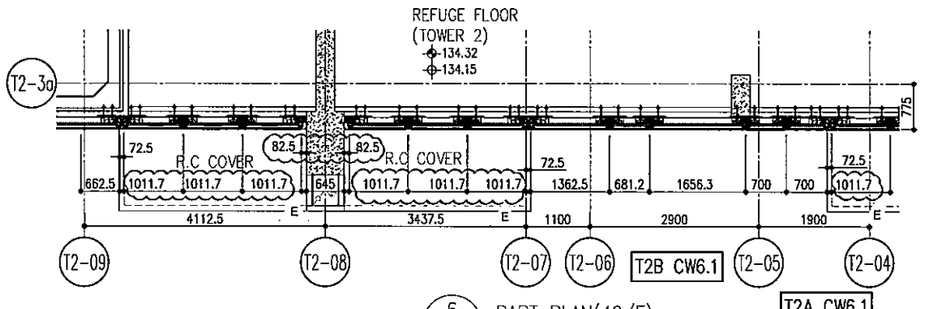

6 — PART PLAN(40/F) FOR CURTAIN WALL

						R/F	+217.00
						67/F	+213.50
26/F	+91.25	39/F	+130.85	52/F	+170.40	66/F	+210.00
25/F	+87.95	38/F	+127.55	51/F	+167.10	65/F	+206.70
23/F	+84.65	37/F	+124.25	50/F	+163.80	63/F	+203.40
22/F	+81.35	36/F	+120.95	49/F	+160.50	62/F	+200.10
21/F	+78.05	35/F	+117.65	48/F	+157.20	61/F	+196.80
20/F	+74.75	33/F	+114.35	47/F	+153.90	60/F	+193.50
19/F	+71.45	32/F	+111.05	46/F	+150.60	59/F	+190.20
18/F	+68.15	31/F	107.75	45/F	+147.30	58/F	+186.90
17/F	+64.85	30/F	+104.45	43/F	+144.00	57/F	+183.60
16/F	+61.55	29/F	+101.15	42/F	+140.70	56/F	+180.30
15/F	+58.25	28/F	+97.85	41/F	+137.40	55/F	+177.00
12/F	+54.95	27/F	+94.55	40/F	+134.15	53/F	+173.70

LEGEND:

- G1 — 10mm THK. HEAT STRENGTHENED GLASS (OUTSIDE) +12mm AIR SPACE + 12mm THK. TEMPERED GLASS
- G2 — 10mm THK. HEAT STRENGTHENED GLASS (OUTSIDE) +12mm AIR SPACE + 10mm THK. TEMPERED GLASS
- G3 — 12mm THK. HEAT STRENGTHENED GLASS
- G4 — 12mm THK. CLEAR TEMPERED GLASS (INTERNAL PROTECTIVE BARRIER)
- G5 — 10mm BLUE TINTED HEAT STRENGTHENED GLASS DELETED
- S1 — 10mm THK. CLEAR TEMPERED GLASS DELETED
- S2 — 8mm THK. CLEAR HEAT-STRENGTHENED GLASS + 2mm PVB + 8mm THK. CLEAR HEAT STRENGTHENED GLASS DELETED
- 3 mm THK. ALUM. CLADDING
- 3 mm THK. ALUM. BACKPAN
- S.J. — STACK JOINT

NOTE:
1. ALL DIMENSIONS ARE IN mm.
2. ALL ELEVATIONS ARE VIEWED FROM OUTSIDE.
3. ALL DIMENSIONS TO BE VERIFIED ON SITE BEFORE FABRICATION.

LEGEND:
- X1 / X001 — DETAIL MARK NO. / REFER SHEET NO.
- F.F.L. — FINISHED FLOOR LEVEL
- S.F.L. — STRUCTURAL FLOOR LEVEL
- (28) — REVERSED DETAIL

NO.	DATE	REVISED	BY
E	28/05/22	REVISED AS PER COMMENTS	LS
D	06/04/22	REVISED AS PER COMMENTS	LS
C	22/01/22	REVISED AS PER COMMENTS	LS
B	20/12/21	REVISED AS PER COMMENTS	LS
A	03/12/21	REVISED AS PER COMMENTS	LS

JOB NO. : J-858

PROJECT : PROPOSED RESIDENTIAL DEVELOPMENT AT TKOTL 70RP, PHASE 11, LOHAS PARK TSEUNG KWAN O, N.T.

TITLE : TYPICAL FLOOR PARTIAL ELEVATION & SECTION, PLAN FOR CURTAIN WALL (TOWER 2)

DATE : 20-OCT-21 | SCALE : 1:50(A1) | DRAWN BY : | CHECKED BY :

DWG NO. : 0858-CW-PE211 | REV. : E

美特鋁質有限公司 MIDI ALUMINIUM FABRICATOR LTD.
Units 6-8, Sunray Industrial Centre, 1/F
610 Cha Kwo Ling Road, Kowloon
Tel:23489211-4 Fax:(852)27727666

CLIENT : 信和置業有限公司 Sino Land Company Limited

ARCHITECT : ronald lu & partners 呂元祥建築師事務所(香港)有限公司 Ronald Lu & Partners (HK) Ltd.

MAIN CONTRACTOR : Gammon

STRUCTURAL ENGINEER : AECOM

FACADE CONSULTANT : AECOM

B.D. REF :

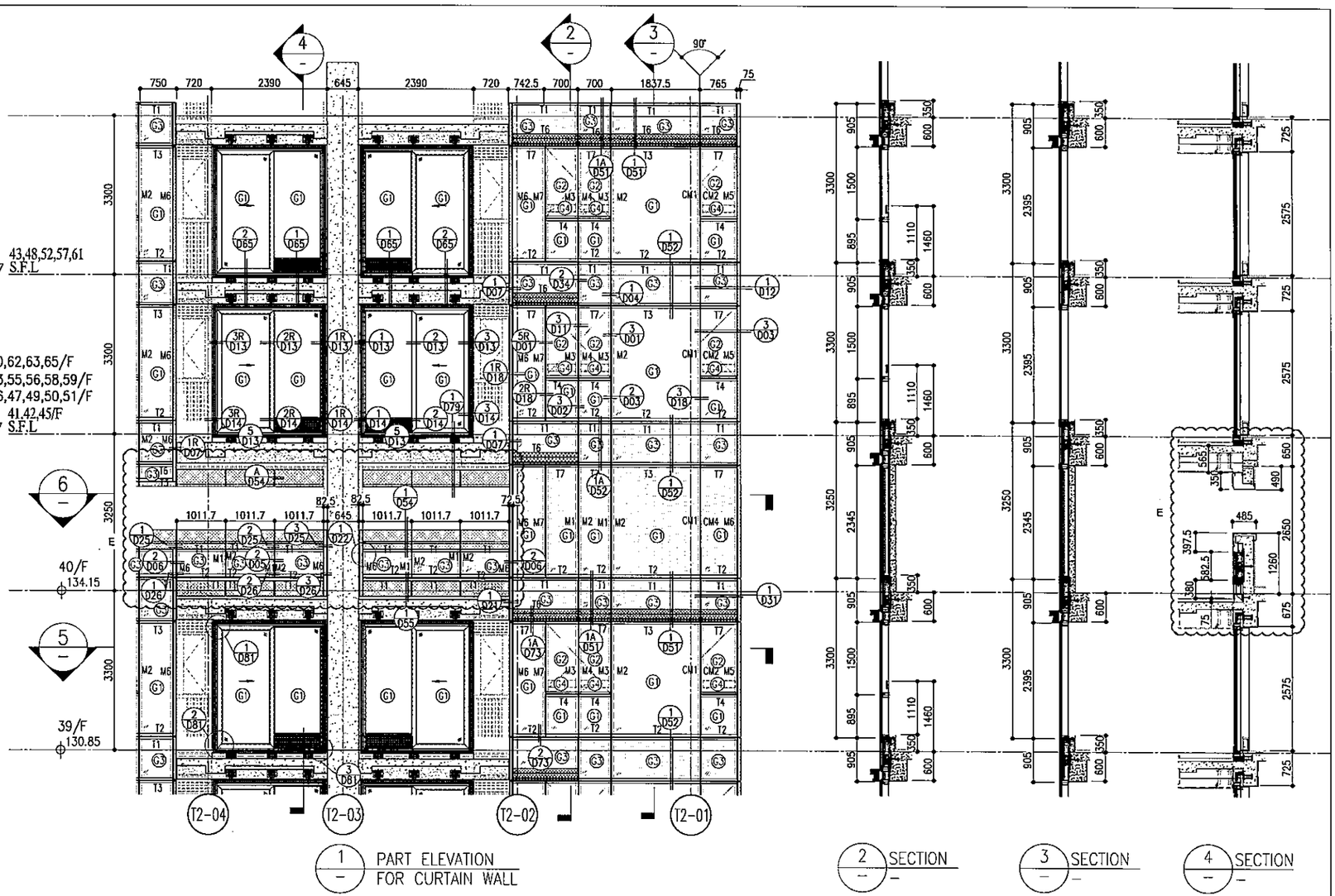

1 / – PART ELEVATION FOR CURTAIN WALL

2 / – SECTION –

3 / – SECTION –

4 / – SECTION –

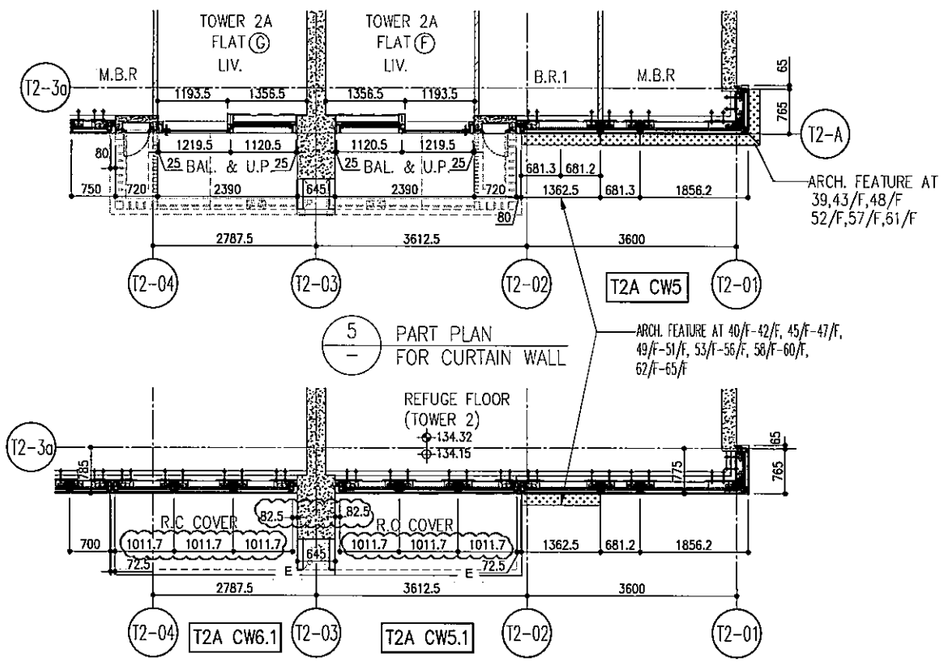

5 / – PART PLAN FOR CURTAIN WALL

ARCH. FEATURE AT 40/F-42/F, 45/F-47/F, 49/F-51/F, 53/F-56/F, 58/F-60/F, 62/F-65/F

6 / – PART PLAN(40/F) FOR CURTAIN WALL

						R/F	+217.00
						67/F	+213.50
26/F	+91.25	39/F	+130.85	52/F	+170.40	66/F	+210.00
25/F	+87.95	38/F	+127.55	51/F	+167.10	65/F	+206.70
23/F	+84.65	37/F	+124.25	50/F	+163.80	63/F	+203.40
22/F	+81.35	36/F	+120.95	49/F	+160.50	62/F	+200.10
21/F	+78.05	35/F	+117.65	48/F	+157.20	61/F	+196.80
20/F	+74.75	33/F	+114.35	47/F	+153.90	60/F	+193.50
19/F	+71.45	32/F	+111.05	46/F	+150.60	59/F	+190.20
18/F	+68.15	31/F	107.75	45/F	+147.30	58/F	+186.90
17/F	+64.85	30/F	+104.45	43/F	+144.00	57/F	+183.60
16/F	+61.55	29/F	+101.15	42/F	+140.70	56/F	+180.30
15/F	+58.25	28/F	+97.85	41/F	+137.40	55/F	+177.00
12/F	+54.95	27/F	+94.55	40/F	+134.15	53/F	+173.70

LEGEND:

- G1 – 10mm THK. HEAT STRENGTHENED GLASS (OUTSIDE) +12mm AIR SPACE + 12mm THK. TEMPERED GLASS
- G2 – 10mm THK. HEAT STRENGTHENED GLASS (OUTSIDE) +12mm AIR SPACE + 10mm THK. TEMPERED GLASS
- G3 – 12mm THK. HEAT STRENGTHENED GLASS
- G4 – 12mm THK. CLEAR TEMPERED GLASS (INTERNAL PROTECTIVE BARRIER)
- G5 – 10mm BLUE TINTED HEAT STRENGTHENED GLASS DELETED
- S1 – 10mm THK. CLEAR TEMPERED GLASS DELETED
- S2 – 8mm THK. CLEAR HEAT-STRENGTHENED GLASS + 2mm PVB + 8mm THK. CLEAR HEAT-STRENGTHENED GLASS DELETED
- – 3 mm THK. ALUM. CLADDING
- – 3 mm THK. ALUM. BACKPAN
- S.J. – STACK JOINT

NOTE:
1. ALL DIMENSIONS ARE IN mm.
2. ALL ELEVATIONS ARE VIEWED FROM OUTSIDE.
3. ALL DIMENSIONS TO BE VERIFIED ON SITE BEFORE FABRICATION.

LEGEND:
- (X1) / (X001) – DETAIL MARK NO. / REFER SHEET NO.
- F.F.L. – FINISHED FLOOR LEVEL
- S.F.L. – STRUCTURAL FLOOR LEVEL
- (28) – REVERSED DETAIL

NO.	DATE	REVISED AS PER COMMENTS	BY
E	26/05/22	REVISED AS PER COMMENTS	LS
D	06/04/22	REVISED AS PER COMMENTS	LS
C	22/01/22	REVISED AS PER COMMENTS	LS
B	22/12/21	REVISED AS PER COMMENTS	LS
A	03/12/21	REVISED AS PER COMMENTS	LS

JOB NO. : J-658

PROJECT : PROPOSED RESIDENTIAL DEVELOPMENT AT TKOTL 70RP, PHASE 11, LOHAS PARK TSEUNG KWAN O, N.T.

TITLE : TYPICAL FLOOR PARTIAL ELEVATION & SECTION, PLAN FOR CURTAIN WALL (TOWER 2)

DATE : 20-OCT-21 | SCALE : 1:50(A1)

DRAWN BY : | CHECKED BY :

DWG NO. : J658-CW-PE212 | REV. : E

美特鋁質有限公司 MIDI ALUMINIUM FABRICATOR LTD.
Units 6-8, Sunray Industrial Centre, 1/F
610 Cha Kwo Ling Road, Kowloon
Tel:23489211-4 Fax:(852)27727666

CLIENT : 信和置業有限公司 Sino Land Company Limited

ARCHITECT : ronald lu & partners 盧永雄建築師事務所(香港) Ronald Lu & Partners (HK) Ltd.

MAIN CONTRACTOR : Gammon

STRUCTURAL ENGINEER : AECOM

FACADE CONSULTANT : AECOM

B.D. REF. :

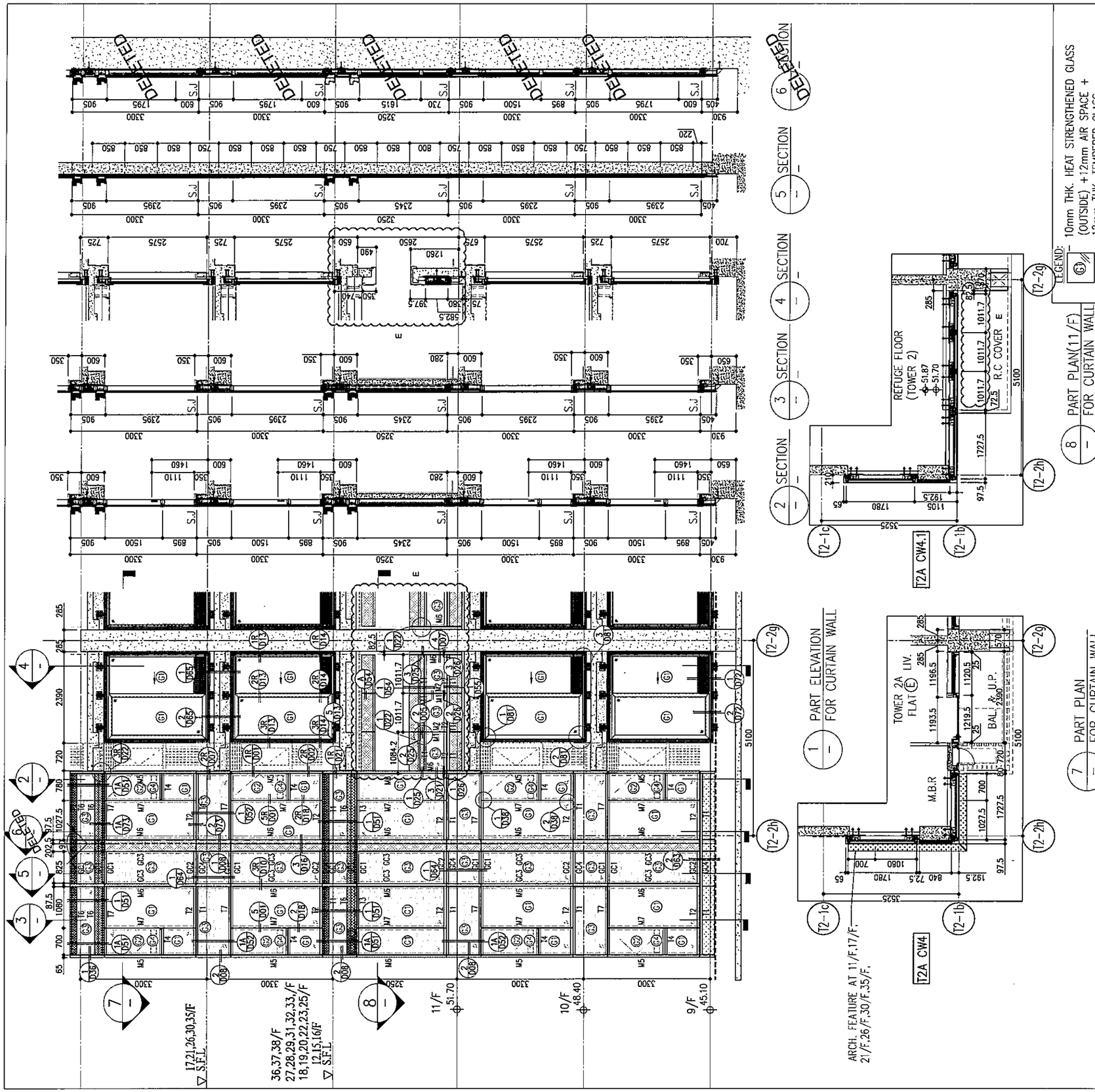

LEGEND:

- G1 — 10mm THK. HEAT STRENGTHENED GLASS (OUTSIDE) +12mm AIR SPACE + 12mm THK. TEMPERED GLASS
- G2 — 10mm THK. HEAT STRENGTHENED GLASS (OUTSIDE) +12mm AIR SPACE + 10mm THK. TEMPERED GLASS
- G3 — 12mm THK. HEAT STRENGTHENED GLASS
- G4 — 12mm THK. CLEAR TEMPERED GLASS (INTERNAL PROTECTIVE BARRIER)
- G5 — 10mm BLUE TINTED HEAT STRENGTHENED GLASS
- S1 — 10mm THK. CLEAR HEAT-STRENGTHENED GLASS +9mm AIR SPACE +10mm CLEAR TEMPERED GLASS
- S2 — 8mm THK. CLEAR HEAT-STRENGTHENED GLASS +1.52mm PVB + 8mm THK. CLEAR HEAT-STRENGTHENED GLASS
- 3 mm THK. ALUM. CLADDING
- 3 mm THK. ALUM. BACKPAN
- S.J. — STACK JOINT

26/F	+91.25	39/F	+130.85	52/F	+170.40	R/F	+217.00
25/F	+87.95	38/F	+127.55	51/F	+167.10	67/F	+213.50
23/F	+84.65	37/F	+124.25	50/F	+163.80	66/F	+210.00
22/F	+81.35	36/F	+120.95	49/F	+160.50	65/F	+206.70
21/F	+78.05	35/F	+117.65	48/F	+157.20	63/F	+203.40
20/F	+74.75	33/F	+114.35	47/F	+153.90	62/F	+200.10
19/F	+71.45	32/F	+111.05	46/F	+150.60	61/F	+196.80
18/F	+68.15	31/F	107.75	45/F	+147.30	60/F	+193.50
17/F	+64.85	30/F	+104.45	43/F	+144.00	59/F	+190.20
16/F	+61.55	29/F	+101.15	42/F	+140.70	58/F	+186.90
15/F	+58.25	28/F	+97.85	41/F	+137.40	57/F	+183.60
12/F	+54.95	27/F	+94.55	40/F	+134.15	56/F	+180.30
						55/F	+177.00
						53/F	+173.70

B.D. REF :

CLIENT : 信和置業有限公司 Sino Land Company Limited

ARCHITECT : ronald lu & partners Architects . Planners . Interior Designers Ronald Lu & Partners (HK) Ltd. 呂元祥建築師事務所(香港)有限公司

MAIN CONTRACTOR : Gammon

STRUCTURAL ENGINEER : AECOM

FACADE CONSULTANT: AECOM

NOTE :
1. ALL DIMENSIONS ARE IN mm.
2. ALL ELEVATIONS ARE VIEWED FROM OUTSIDE.
3. ALL DIMENSIONS TO BE VERIFIED ON SITE BEFORE FABRICATION.

LEGEND :
- X1 — DETAIL MARK NO.
- X001 — REFER SHEET NO.

1. F.F.L. --FINISHED FLOOR LEVEL
2. S.F.L. --STRUCTURAL FLOOR LEVEL
3. /R --REVERSED DETAIL

NO.	DATE	REVISED	BY
E	25/05/22	REVISED AS PER COMMENTS	LS
D	05/04/22	REVISED AS PER COMMENTS	LS
C	22/01/22	REVISED AS PER COMMENTS	LS
B	20/12/21	REVISED AS PER COMMENTS	LS
A	03/12/21	REVISED AS PER COMMENTS	LS

JOB NO. : J-858

PROJECT : PROPOSED RESIDENTIAL DEVELOPMENT AT TKOTL 70RP, PHASE 11, LOHAS PARK TSEUNG KWAN O, N.T.

TITLE : TYPICAL FLOOR PARTIAL ELEVATION & SECTION, PLAN FOR CURTAIN WALL (TOWER 2)

DATE : 20-OCT-21 | SCALE : 1:50(A1)

DRAWN BY : | CHECKED BY :

美特鋁質有限公司 MIDI ALUMINIUM FABRICATOR LTD.
Units 6-8, Sunray Industrial Centre, 1/F
610 Cha Kwo Ling Road, Kowloon
Tel:23489211-4 Fax:(852)27727666

DWG NO. : J858-CW-PE213 | REV. : E

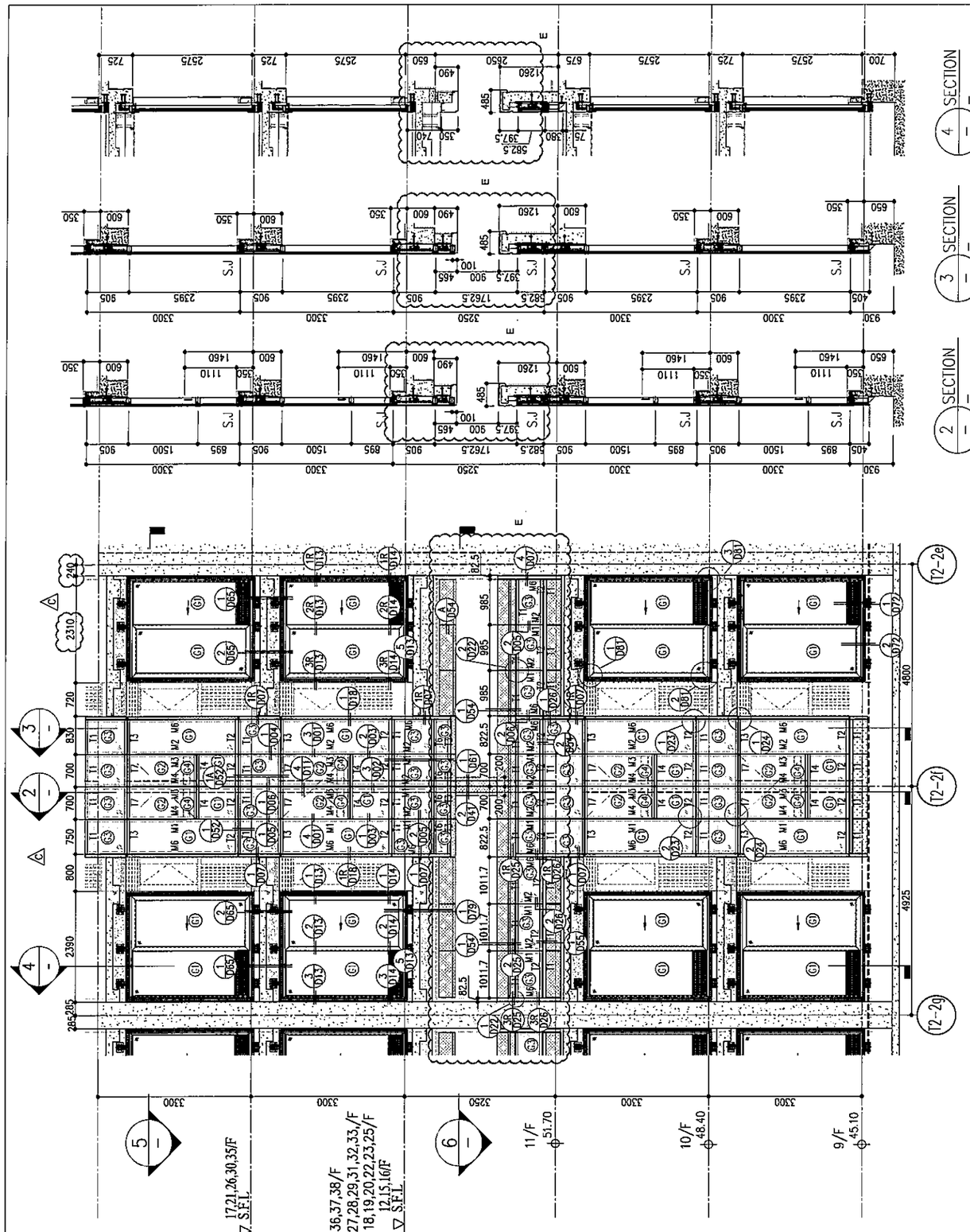

R/F	+217.00
67/F	+213.50
66/F	+210.00
65/F	+206.70
64/F	+203.40
63/F	+200.10
62/F	+196.80
61/F	+193.50
60/F	+190.20
59/F	+186.90
58/F	+183.60
57/F	+180.30
56/F	+177.00
55/F	+173.70
54/F	+170.40
53/F	+167.10
52/F	+163.80
51/F	+160.50
50/F	+157.20
49/F	+153.90
48/F	+150.60
47/F	+147.30
46/F	+144.00
45/F	+140.70
43/F	+137.40
42/F	+134.15
41/F	+130.85
40/F	+127.55
39/F	+124.25
38/F	+120.95
37/F	+117.65
35/F	+114.35
33/F	+111.05
32/F	+107.75
31/F	+104.45
30/F	+101.15
29/F	+97.85
28/F	+94.55
27/F	+91.25
26/F	+87.95
25/F	+84.65
23/F	+81.35
22/F	+78.05
21/F	+74.75
20/F	+71.45
19/F	+68.15
18/F	+64.85
17/F	+61.55
16/F	+58.25
15/F	+54.95
12/F	

LEGEND:

- G1 – 10mm THK. HEAT STRENGTHENED GLASS (OUTSIDE) +12mm AIR SPACE + 12mm THK. TEMPERED GLASS
- G2 – 10mm THK. HEAT STRENGTHENED GLASS (OUTSIDE) +12mm AIR SPACE + 10mm THK. TEMPERED GLASS
- G3 – 12mm THK. HEAT STRENGTHENED GLASS
- G4 – 12mm THK. CLEAR TEMPERED GLASS (INTERNAL PROTECTIVE BARRIER)
- G5 – 10mm THK. BLUE TINTED HEAT STRENGTHENED GLASS
- G6 – 10mm THK. CLEAR HEAT-STRENGTHENED GLASS +9mm AIR SPACE +10mm CLEAR TEMPERED GLASS
- G7 – 8mm THK. CLEAR HEAT-STRENGTHENED GLASS +1.52mm PVB + 8mm THK. CLEAR HEAT-STRENGTHENED GLASS
- – 3 mm THK. ALUM. CLADDING
- – 3 mm THK. ALUM. BACKPAN
- S.J. – STACK JOINT

B.D. REF :

CLIENT :
信和置業有限公司
Sino Land Company Limited

ARCHITECT :
ronald lu & partners
Architects · Planners · Interior Designers
Ronald Lu & Partners (HK) Ltd.
呂元祥建築師事務所(香港)有限公司

MAIN CONTRACTOR :
Gammon

STRUCTURAL ENGINEER :
AECOM

FACADE CONSULTANT:
AECOM

NOTE :
1. ALL DIMENSIONS ARE IN mm.
2. ALL ELEVATIONS ARE VIEWED FROM OUTSIDE.
3. ALL DIMENSIONS TO BE VERIFIED ON SITE BEFORE FABRICATION.

LEGEND :
- X1 / KD01 – DETAIL MARK NO. / REFER SHEET NO.
1. F.F.L. – FINISHED FLOOR LEVEL
2. S.F.L. – STRUCTURAL FLOOR LEVEL
3. (R) – REVERSED DETAIL

NO.	DATE	REVISED	BY
E	25/05/22	REVISED AS PER COMMENTS	LS
D	06/04/22	REVISED AS PER COMMENTS	LS
C	22/01/22	REVISED AS PER COMMENTS	LS
B	20/12/21	REVISED AS PER COMMENTS	LS
A	03/12/21	REVISED AS PER COMMENTS	LS

JOB NO. : J-858

PROJECT :
PROPOSED RESIDENTIAL DEVELOPMENT AT TKOTL 70RP, PHASE 11, LOHAS PARK TSEUNG KWAN O, N.T.

TITLE :
TYPICAL FLOOR PARTIAL ELEVATION & SECTION, PLAN FOR CURTAIN WALL (TOWER 2)

DATE : 20-OCT-21 | SCALE : 1:50(A1)

DRAWN BY : | CHECKED BY :

美特鋁質有限公司
MIDI ALUMINIUM FABRICATOR LTD.
Units 6-8, Sunray Industrial Centre, 1/F
610 Cha Kwo Ling Road, Kowloon
Tel:23489211-4 Fax:(852)27727665

DWG NO. : J858-CW-PE214 | REV. : E

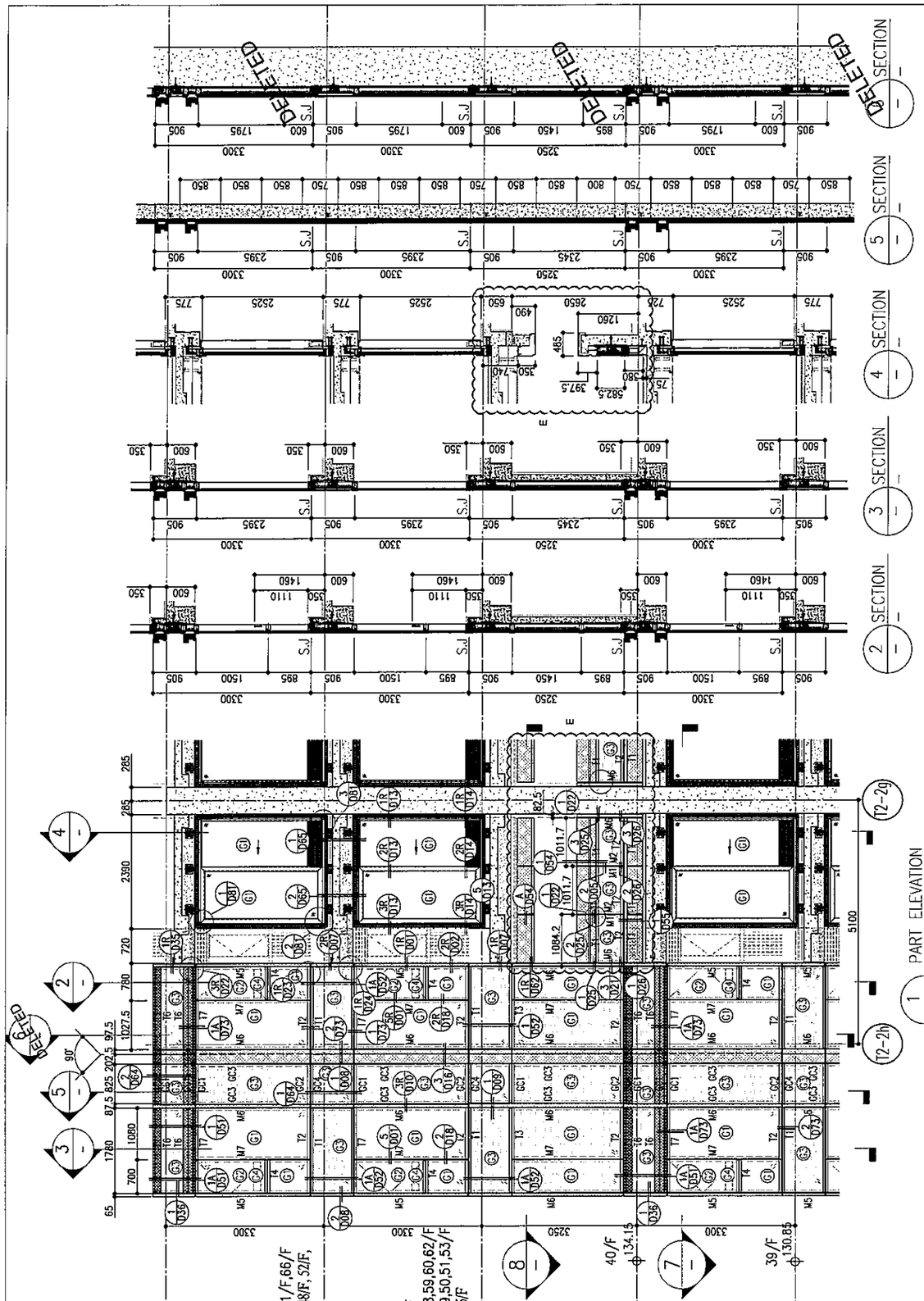

LEGEND:

- 10mm THK. HEAT STRENGTHENED GLASS (OUTSIDE) +12mm AIR SPACE + 12mm THK. TEMPERED GLASS
- 10mm THK. HEAT STRENGTHENED GLASS (OUTSIDE) +12mm AIR SPACE + 10mm THK. TEMPERED GLASS
- 12mm THK. HEAT STRENGTHENED GLASS
- 12mm THK. CLEAR TEMPERED GLASS (INTERNAL PROTECTIVE BARRIER)
- 10mm THK. BLUE TINTED HEAT STRENGTHENED GLASS
- 10mm THK. CLEAR HEAT-STRENGTHENED GLASS +9mm AIR SPACE +10mm CLEAR TEMPERED GLASS
- 8mm THK. CLEAR HEAT-STRENGTHENED GLASS +1.52mm PVB + 8mm THK. CLEAR HEAT-STRENGTHENED GLASS
- 3 mm THK. ALUM. CLADDING
- 3 mm THK. ALUM. BACKPAN
- S.J. - STACK JOINT

R/F	+217.00		
67/F	+213.50		
66/F	+210.00	52/F	+170.40
65/F	+206.70	51/F	+167.10
63/F	+203.40	50/F	+163.80
62/F	+200.10	49/F	+160.50
61/F	+196.80	48/F	+157.20
60/F	+193.50	47/F	+153.90
59/F	+190.20	46/F	+150.60
58/F	+186.90	45/F	+147.30
57/F	+183.60	43/F	+144.00
56/F	+180.30	42/F	+140.70
55/F	+177.00	41/F	+137.40
53/F	+173.70	40/F	+134.15
52/F	+170.40	39/F	+130.85
51/F	+167.10	38/F	+127.55
50/F	+163.80	37/F	+124.25
49/F	+160.50	36/F	+120.95
48/F	+157.20	35/F	+117.65
47/F	+153.90	33/F	+114.35
46/F	+150.60	32/F	+111.05
45/F	+147.30	31/F	107.75
43/F	+144.00	30/F	+104.45
42/F	+140.70	29/F	+101.15
41/F	+137.40	28/F	+97.85
55/F	+177.00	27/F	+94.55
53/F	+173.70	26/F	+91.25
40/F	+134.15	25/F	+87.95
39/F	+130.85	23/F	+84.65
38/F	+127.55	22/F	+81.35
37/F	+124.25	21/F	+78.05
36/F	+120.95	20/F	+74.75
35/F	+117.65	19/F	+71.45
33/F	+114.35	18/F	+68.15
32/F	+111.05	17/F	+64.85
31/F	107.75	16/F	+61.55
30/F	+104.45	15/F	+58.25
29/F	+101.15	12/F	+54.95

B.D. REF :

CLIENT :
信和置業有限公司
Sino Land Company Limited

ARCHITECT :
ronald lu & partners
Architects · Planners · Interior Designers
Ronald Lu & Partners (HK) Ltd.
呂元祥建築師事務所(香港)有限公司

MAIN CONTRACTOR :
Gammon

STRUCTURAL ENGINEER :
AECOM

FACADE CONSULTANT:
AECOM

NOTE :
1. ALL DIMENSIONS ARE IN mm.
2. ALL ELEVATIONS ARE VIEWED FROM OUTSIDE.
3. ALL DIMENSIONS TO BE VERIFIED ON SITE BEFORE FABRICATION.

LEGEND :
- X1 — DETAIL MARK NO.
- X001 — REFER SHEET NO.

1. F.F.L. --FINISHED FLOOR LEVEL
2. S.F.L. --STRUCTURAL FLOOR LEVEL
3. (R) --REVERSED DETAIL

NO.	DATE	REVISED	BY
E	25/05/22	REVISED AS PER COMMENTS	LS
D	06/04/22	REVISED AS PER COMMENTS	LS
C	22/01/22	REVISED AS PER COMMENTS	LS
B	20/12/21	REVISED AS PER COMMENTS	LS
A	03/12/21	REVISED AS PER COMMENTS	LS

JOB NO. : J-858

PROJECT :
PROPOSED RESIDENTIAL DEVELOPMENT AT TKOTL 70RP, PHASE 11, LOHAS PARK TSEUNG KWAN O, N.T.

TITLE :
TYPICAL FLOOR PARTIAL ELEVATION & SECTION, PLAN FOR CURTAIN WALL (TOWER 2)

DATE : 20-OCT-21 | SCALE : 1:50(A1)

DRAWN BY : | CHECKED BY :

美特鋁質有限公司
MIDI ALUMINIUM FABRICATOR LTD.
Units 6-8, Sunray Industrial Centre, 1/F
610 Cha Kwo Ling Road, Kowloon
Tel:23489211-4 Fax:(852)27727666

DWG NO. : J858-CW-PE215 | REV. : E

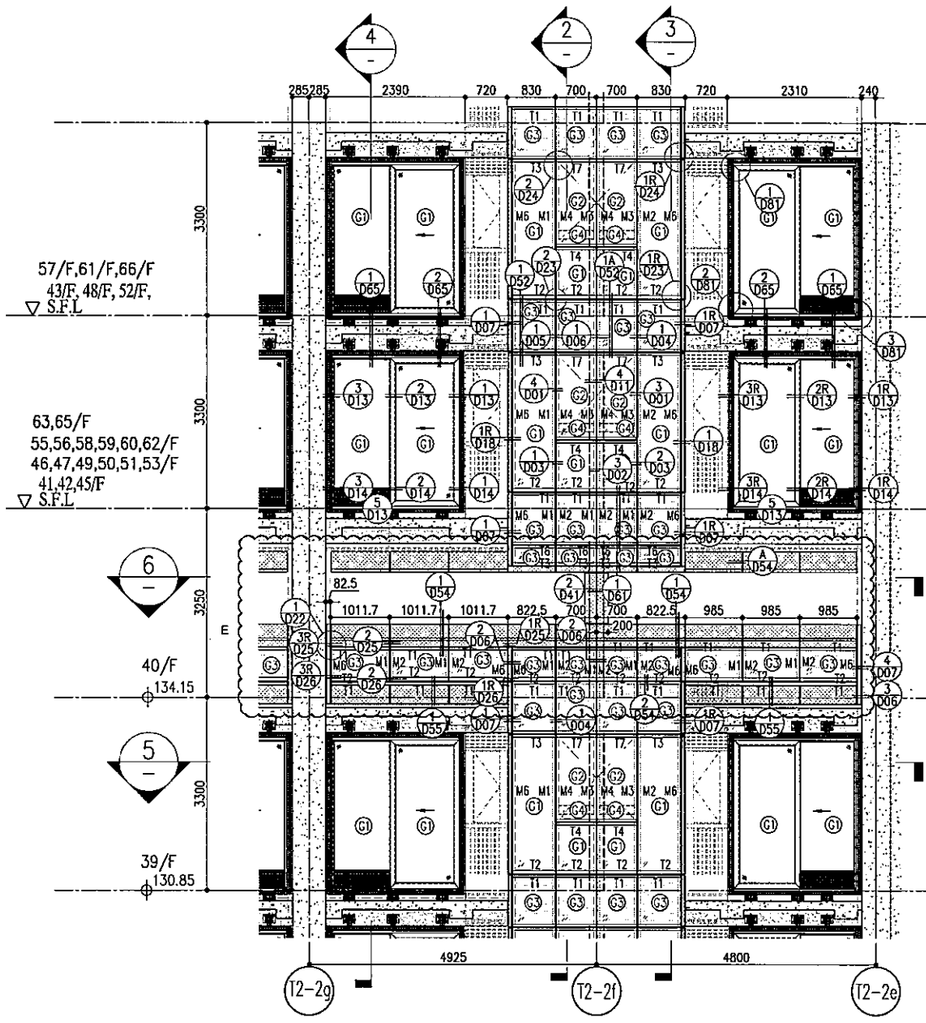

1 / – PART ELEVATION FOR CURTAIN WALL

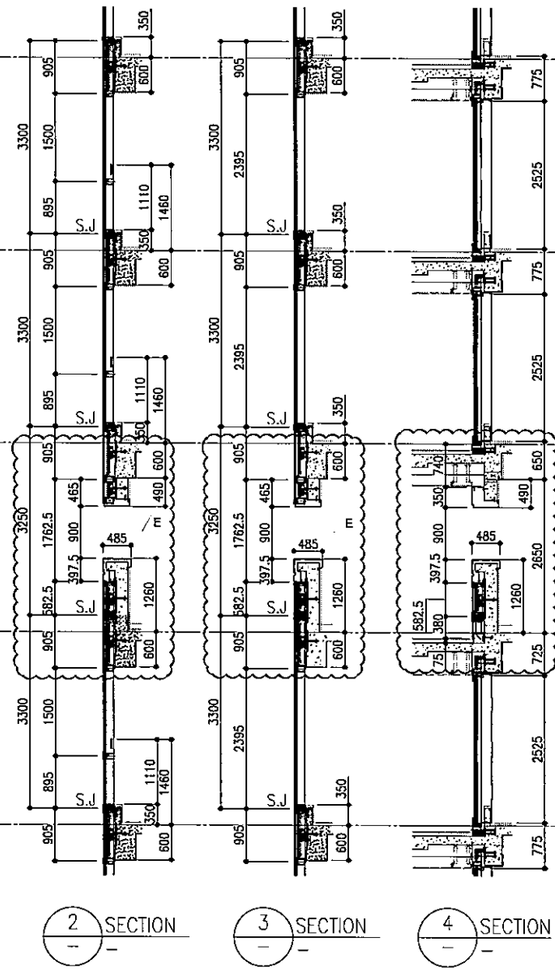

2 / – SECTION

3 / – SECTION

4 / – SECTION

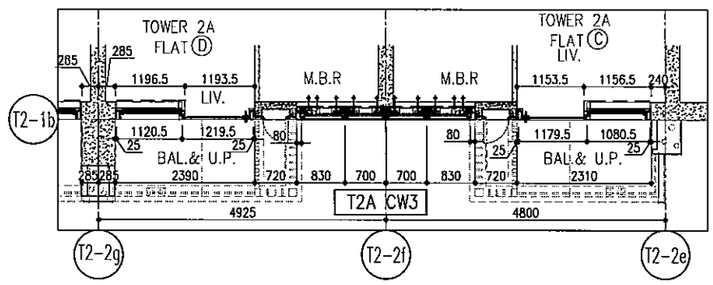

5 / – PART PLAN FOR CURTAIN WALL

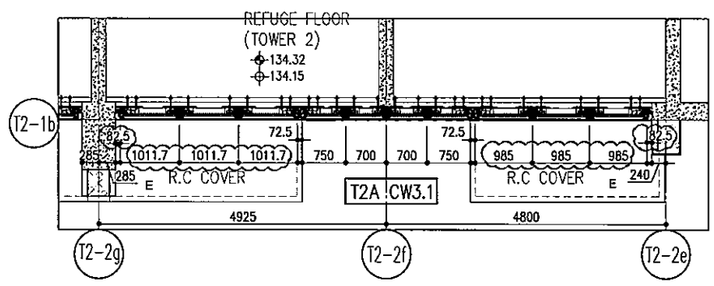

6 / – PART PLAN(40/F) FOR CURTAIN WALL

						R/F	+217.00
						67/F	+213.50
26/F	+91.25	39/F	+130.85	52/F	+170.40	66/F	+210.00
25/F	+87.95	38/F	+127.55	51/F	+167.10	65/F	+206.70
23/F	+84.65	37/F	+124.25	50/F	+163.80	63/F	+203.40
22/F	+81.35	36/F	+120.95	49/F	+160.50	62/F	+200.10
21/F	+78.05	35/F	+117.65	48/F	+157.20	61/F	+196.80
20/F	+74.75	33/F	+114.35	47/F	+153.90	60/F	+193.50
19/F	+71.45	32/F	+111.05	46/F	+150.60	59/F	+190.20
18/F	+68.15	31/F	107.75	45/F	+147.30	58/F	+186.90
17/F	+64.85	30/F	+104.45	43/F	+144.00	57/F	+183.60
16/F	+61.55	29/F	+101.15	42/F	+140.70	56/F	+180.30
15/F	+58.25	28/F	+97.85	41/F	+137.40	55/F	+177.00
12/F	+54.95	27/F	+94.55	40/F	+134.15	53/F	+173.70

LEGEND:

- G1 – 10mm THK. HEAT STRENGTHENED GLASS (OUTSIDE) +12mm AIR SPACE + 12mm THK. TEMPERED GLASS
- G2 – 10mm THK. HEAT STRENGTHENED GLASS (OUTSIDE) +12mm AIR SPACE + 10mm THK. TEMPERED GLASS
- G3 – 12mm THK. HEAT STRENGTHENED GLASS
- G4 – 12mm THK. CLEAR TEMPERED GLASS (INTERNAL PROTECTIVE BARRIER)
- G5 – 10mm THK. BLUE TINTED HEAT STRENGTHENED GLASS DELETED
- G6 – 10mm THK. CLEAR HEAT-STRENGTHENED GLASS +9mm AIR SPACE +10mm CLEAR TEMPERED GLASS DELETED
- G7 – 8mm THK. CLEAR HEAT-STRENGTHENED GLASS +1.52mm PVB + 8mm THK. CLEAR HEAT-STRENGTHENED GLASS DELETED
- 3 mm THK. ALUM. CLADDING
- 3 mm THK. ALUM. BACKPAN
- S.J. – STACK JOINT

NOTE :
1. ALL DIMENSIONS ARE IN mm.
2. ALL ELEVATIONS ARE VIEWED FROM OUTSIDE.
3. ALL DIMENSIONS TO BE VERIFIED ON SITE BEFORE FABRICATION.

LEGEND :
- X1 / X001 — RETAIL MARK NO. / REFER SHEET NO.
- 1. F.F.L. --FINISHED FLOOR LEVEL
- 2. S.F.L. --STRUCTURAL FLOOR LEVEL
- 3. /B — --REVERSED DETAIL

NO.	DATE	REVISED	BY
E	25/05/22	REVISED AS PER COMMENTS	LS
D	06/04/22	REVISED AS PER COMMENTS	LS
C	22/01/22	REVISED AS PER COMMENTS	LS
B	29/12/21	REVISED AS PER COMMENTS	LS
A	03/12/21	REVISED AS PER COMMENTS	LS

JOB NO. : J-858

PROJECT :
PROPOSED RESIDENTIAL DEVELOPMENT AT TKOTL 70RP, PHASE 11, LOHAS PARK TSEUNG KWAN O, N.T.

TITLE :
TYPICAL FLOOR PARTIAL ELEVATION & SECTION, PLAN FOR CURTAIN WALL (TOWER 2)

DATE : 20-OCT-21 | SCALE : 1:50(A1)

DRAWN BY : | CHECKED BY :

DWG NO. : J858-CW-PE216 | REV. : E

美特鋁質有限公司
MIDT ALUMINIUM FABRICATION LTD.
Units 6-8, Sunray Industrial Centre, 1/F
610 Cho Kwu Ling Road, Kowloon
Tel:23489211-4 Fax:(852)27727666

FACADE CONSULTANT: AECOM

STRUCTURAL ENGINEER : AECOM

MAIN CONTRACTOR : Gammon

ARCHITECT : ronald lu & partners (Hong Kong) Limited 呂元祥建築師事務所(香港)有限公司

CLIENT : 信和置業有限公司 Sino Land Company Limited

B.D. REF :

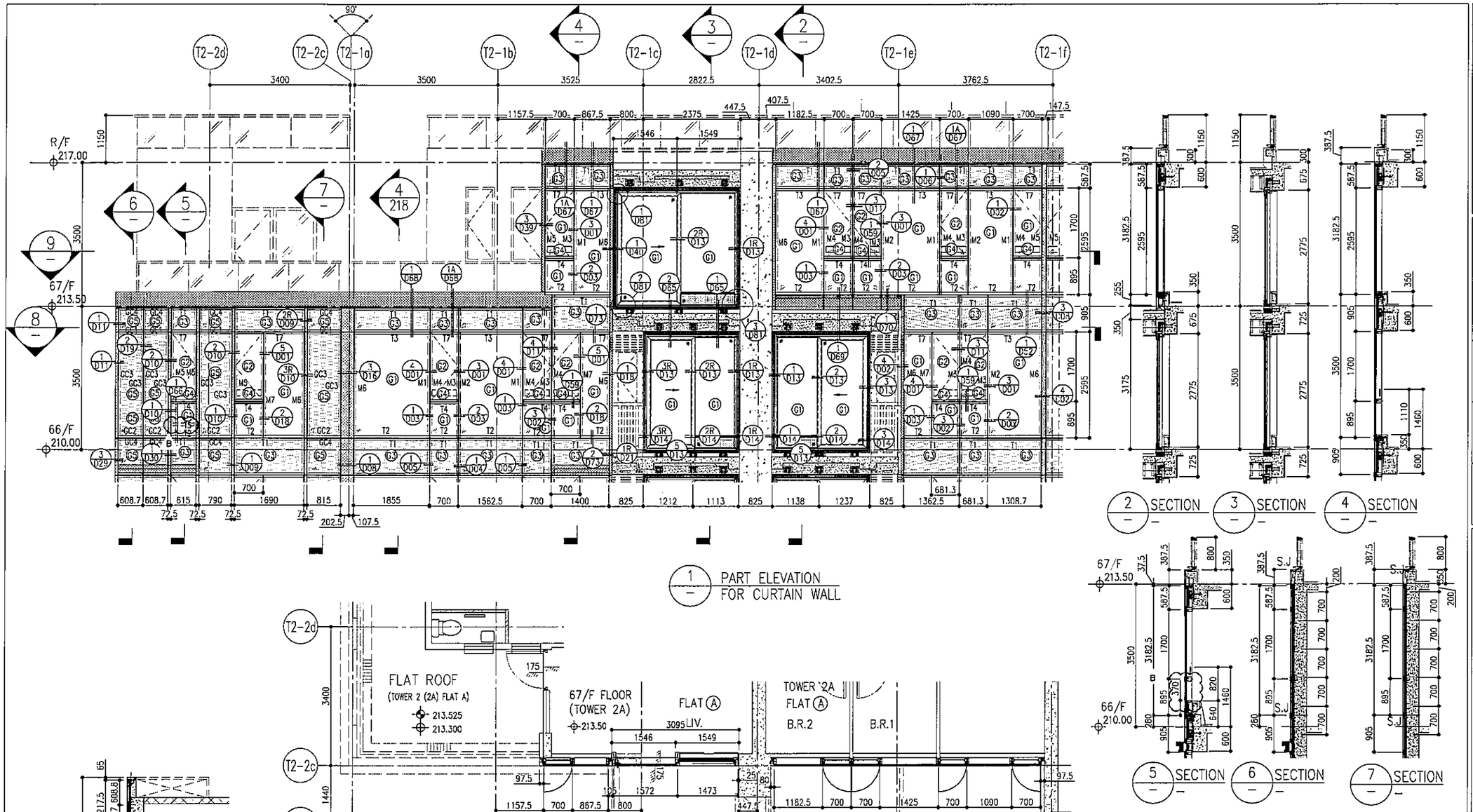

1 PART ELEVATION FOR CURTAIN WALL

9 PART PLAN FOR CURTAIN WALL

8 PART PLAN FOR CURTAIN WALL

2 SECTION

3 SECTION

4 SECTION

5 SECTION

6 SECTION

7 SECTION

LEGEND:

- G1 – 10mm THK. HEAT STRENGTHENED GLASS (OUTSIDE) +12mm AIR SPACE + 12mm THK. TEMPERED GLASS
- G2 – 10mm THK. HEAT STRENGTHENED GLASS (OUTSIDE) +12mm AIR SPACE + 10mm THK. TEMPERED GLASS
- G3 – 12mm THK. HEAT STRENGTHENED GLASS
- G4 – 12mm THK. CLEAR TEMPERED GLASS (INTERNAL PROTECTIVE BARRIER)
- G5 – 12mm CLEAR HEAT STRENGTHENED GLASS
- G6 – 10mm THK. CLEAR HEAT-STRENGTHENED GLASS +9mm AIR SPACE +10mm CLEAR TEMPERED GLASS
- G7 – 8mm THK. CLEAR HEAT-STRENGTHENED GLASS +1.52mm PVB + 8mm THK. CLEAR HEAT-STRENGTHENED GLASS
- 3 mm THK. ALUM. CLADDING
- 3 mm THK. ALUM. BACKPAN
- S.J. – STACK JOINT

DELETED
DELETED
DELETED

B.D. REF :

CLIENT :
信和置業有限公司
Sino Land Company Limited

ARCHITECT :
ronald lu & partners
Architects . Planners . Interior Designers
Ronald Lu & Partners (HK) Ltd.
呂元祥建築師事務所(香港)有限公司

MAIN CONTRACTOR :
Gammon

STRUCTURAL ENGINEER :
AECOM

FACADE CONSULTANT:
AECOM

NOTE :
1. ALL DIMENSIONS ARE IN mm.
2. ALL ELEVATIONS ARE VIEWED FROM OUTSIDE.
3. ALL DIMENSIONS TO BE VERIFIED ON SITE BEFORE FABRICATION.

LEGEND :
- X1 / X001 — DETAIL MARK NO. / REFER SHEET NO.
1. F.F.L. --FINISHED FLOOR LEVEL
2. S.F.L. --STRUCTURAL FLOOR LEVEL
3. (R) --REVERSED DETAIL

NO.	DATE	REVISED	BY
B	26/05/22	REVISED AS PER COMMENTS	LS
A	12/04/22	REVISED AS PER COMMENTS	LS

JOB NO. : J-858

PROJECT :
PROPOSED RESIDENTIAL DEVELOPMENT
AT TKOTL 70RP, PHASE 11, LOHAS PARK
TSEUNG KWAN O, N.T.

TITLE :
PENTHOUSE FLOOR PARTIAL ELEVATION & SECTION, PLAN FOR CURTAIN WALL (TOWER 2)

DATE : 22-OCT-21 | SCALE : 1:50(A1)

DRAWN BY : | CHECKED BY :

美特鋁質有限公司
MIDI ALUMINIUM FABRICATOR LTD.
Units 6-8, Sunray Industrial Centre, 1/F
610 Cha Kwo Ling Road, Kowloon
Tel:23489211-4 Fax:(852)27727666

DWG NO. : J858-CW-PE217 | REV. : B

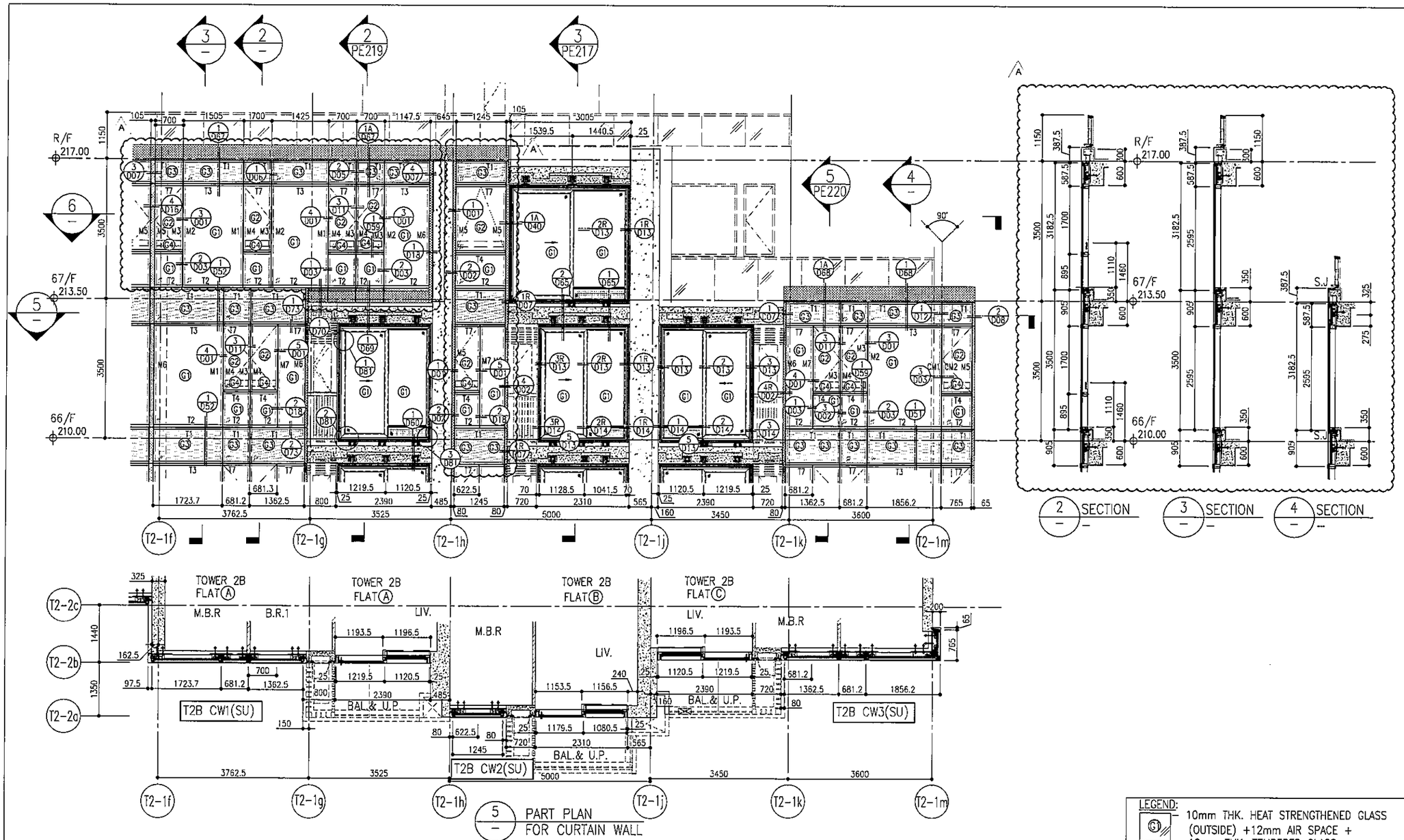

LEGEND:

- G1 – 10mm THK. HEAT STRENGTHENED GLASS (OUTSIDE) +12mm AIR SPACE + 12mm THK. TEMPERED GLASS
- G2 – 10mm THK. HEAT STRENGTHENED GLASS (OUTSIDE) +12mm AIR SPACE + 10mm THK. TEMPERED GLASS
- G3 – 12mm THK. HEAT STRENGTHENED GLASS
- G4 – 12mm THK. CLEAR TEMPERED GLASS (INTERNAL PROTECTIVE BARRIER)
- G5 – 12mm CLEAR HEAT STRENGTHENED GLASS
- G6 – 10mm THK. CLEAR HEAT-STRENGTHENED GLASS +9mm AIR SPACE +10mm CLEAR TEMPERED GLASS
- G7 – 8mm THK. CLEAR HEAT-STRENGTHENED GLASS +1.52mm PVB + 8mm THK. CLEAR HEAT-STRENGTHENED GLASS
- 3 mm THK. ALUM. CLADDING
- 3 mm THK. ALUM. BACKPAN
- S.J. – STACK JOINT

DELETED DELETED

B.D. REF :

CLIENT :
信和置業有限公司
Sino Land Company Limited

ARCHITECT :
ronald lu & partners
Architects · Planners · Interior Designers
Ronald Lu & Partners (HK) Ltd.
呂元祥建築師事務所(香港)有限公司

MAIN CONTRACTOR :
Gammon

STRUCTURAL ENGINEER :
AECOM

FACADE CONSULTANT:
AECOM

NOTE :
1. ALL DIMENSIONS ARE IN mm.
2. ALL ELEVATIONS ARE VIEWED FROM OUTSIDE.
3. ALL DIMENSIONS TO BE VERIFIED ON SITE BEFORE FABRICATION.

LEGEND :
- X1 / X001 – DETAIL MARK NO. / REFER SHEET NO.
1. F.F.L. --FINISHED FLOOR LEVEL
2. S.F.L. --STRUCTURAL FLOOR LEVEL
3. /R --REVERSED DETAIL

NO.	DATE	REVISED	BY
A	12/04/22	REVISED AS PER COMMENTS	LS

JOB NO. : J-858

PROJECT :
PROPOSED RESIDENTIAL DEVELOPMENT AT TKOTL 70RP, PHASE 11, LOHAS PARK TSEUNG KWAN O, N.T.

TITLE :
PENTHOUSE FLOOR PARTIAL ELEVATION & SECTION, PLAN FOR CURTAIN WALL (TOWER 2)

DATE : 22-OCT-21 | SCALE : 1:50(A1)

DRAWN BY : | CHECKED BY :

美特鋁質有限公司
MIDI ALUMINIUM FABRICATOR LTD.
Units 6-8, Sunray Industrial Centre, 1/F
610 Cha Kwo Ling Road, Kowloon
Tel:23489211-4 Fax:(852)27727666

DWG NO. : J858-CW-PE218 | REV. : A

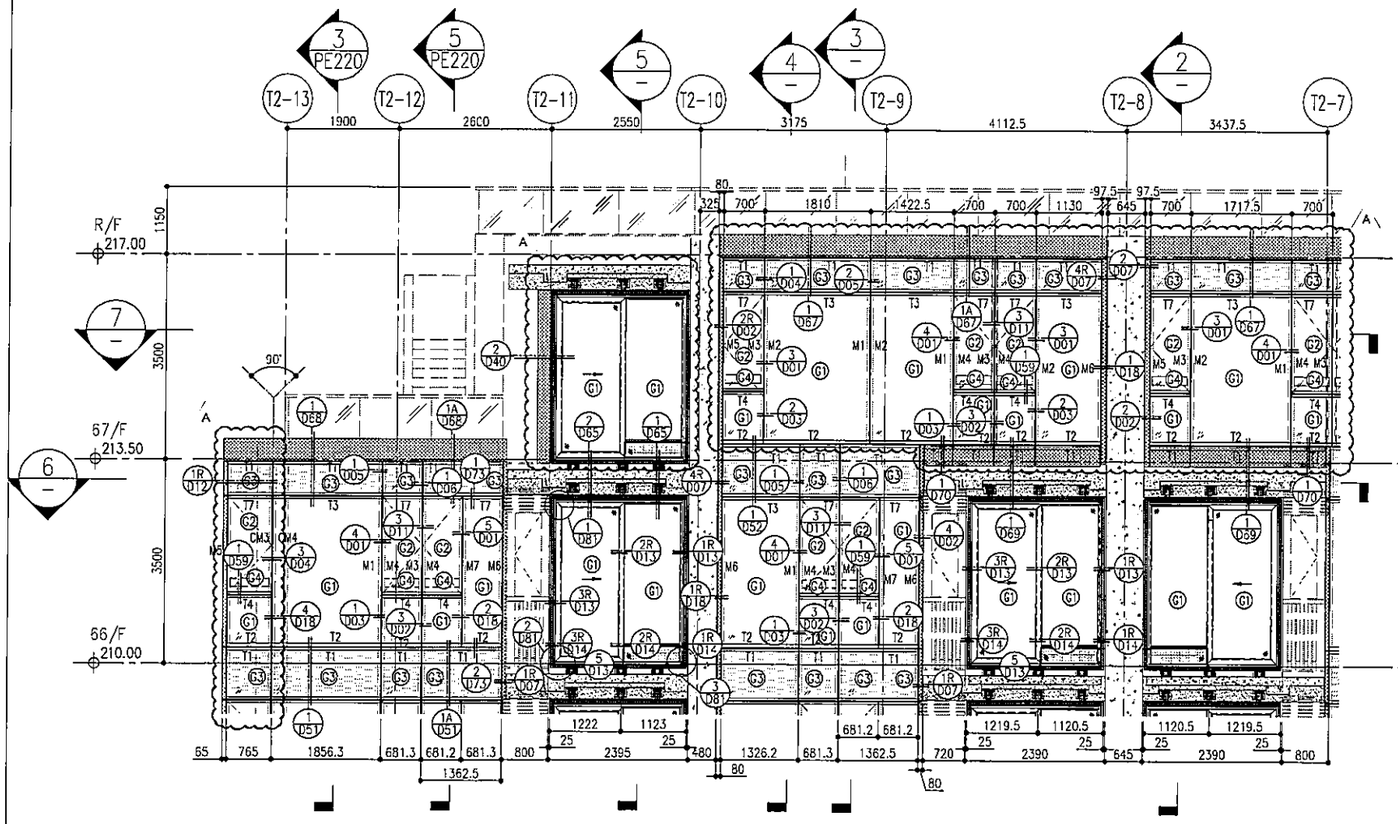

6 / – PART PLAN FOR CURTAIN WALL

7 / – PART PLAN FOR CURTAIN WALL

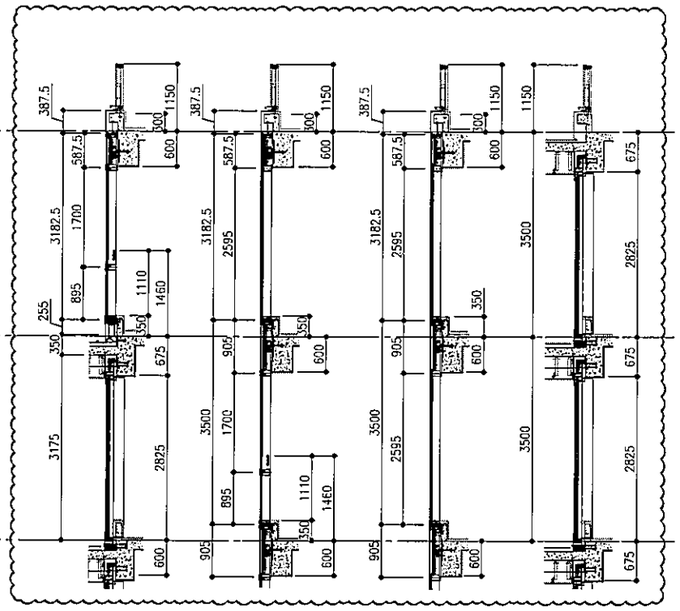

2 / – SECTION

3 / – SECTION

4 / – SECTION

5 / – SECTION

LEGEND:

- G1 – 10mm THK. HEAT STRENGTHENED GLASS (OUTSIDE) +12mm AIR SPACE + 12mm THK. TEMPERED GLASS
- G2 – 10mm THK. HEAT STRENGTHENED GLASS (OUTSIDE) +12mm AIR SPACE + 10mm THK. TEMPERED GLASS
- G3 – 12mm THK. HEAT STRENGTHENED GLASS
- G4 – 12mm THK. CLEAR TEMPERED GLASS (INTERNAL PROTECTIVE BARRIER)
- G5 – 12mm CLEAR HEAT STRENGTHENED GLASS (DELETED)
- G6 – 10mm THK. CLEAR HEAT-STRENGTHENED GLASS +9mm AIR SPACE +10mm CLEAR TEMPERED GLASS (DELETED)
- G7 – 8mm THK. CLEAR HEAT-STRENGTHENED GLASS +1.52mm PVB + 8mm THK. CLEAR HEAT--STRENGTHENED GLASS
- – 3 mm THK. ALUM. CLADDING
- – 3 mm THK. ALUM. BACKPAN
- S.J. – STACK JOINT

B.D. REF :

CLIENT :
信和置業有限公司
Sino Land Company Limited

ARCHITECT :
ronald lu & partners
Architects . Planners . Interior Designers
Ronald Lu & Partners (HK) Ltd.
呂元祥建築師事務所(香港)有限公司

MAIN CONTRACTOR :
Gammon

STRUCTURAL ENGINEER :
AECOM

FACADE CONSULTANT:
AECOM

NOTE :
1. ALL DIMENSIONS ARE IN mm.
2. ALL ELEVATIONS ARE VIEWED FROM OUTSIDE.
3. ALL DIMENSIONS TO BE VERIFIED ON SITE BEFORE FABRICATION.

LEGEND :
X1 – DETAIL MARK NO.
X001 – REFER SHEET NO.
1. F.F.L. --FINISHED FLOOR LEVEL
2. S.F.L. --STRUCTURAL FLOOR LEVEL
3. /R --REVERSED DETAIL

NO.	DATE	REVISED	BY
A	12/04/22	REVISED AS PER COMMENTS	LS

JOB NO. : J-858

PROJECT :
PROPOSED RESIDENTIAL DEVELOPMENT
AT TKOTL 70RP, PHASE 11, LOHAS PARK
TSEUNG KWAN O, N.T.

TITLE :
PENTHOUSE FLOOR PARTIAL ELEVATION & SECTION, PLAN FOR CURTAIN WALL (TOWER 2)

DATE : 22-OCT-21 | SCALE : 1:50(A1)

DRAWN BY : | CHECKED BY :

美特鋁質有限公司
MIDI ALUMINIUM FABRICATOR LTD.
Units 6-8, Sunray Industrial Centre, 1/F
610 Cha Kwo Ling Road, Kowloon
Tel:23489211-4 Fax:(852)27727666

DWG NO. : J858-CW-PE219 | REV. : A

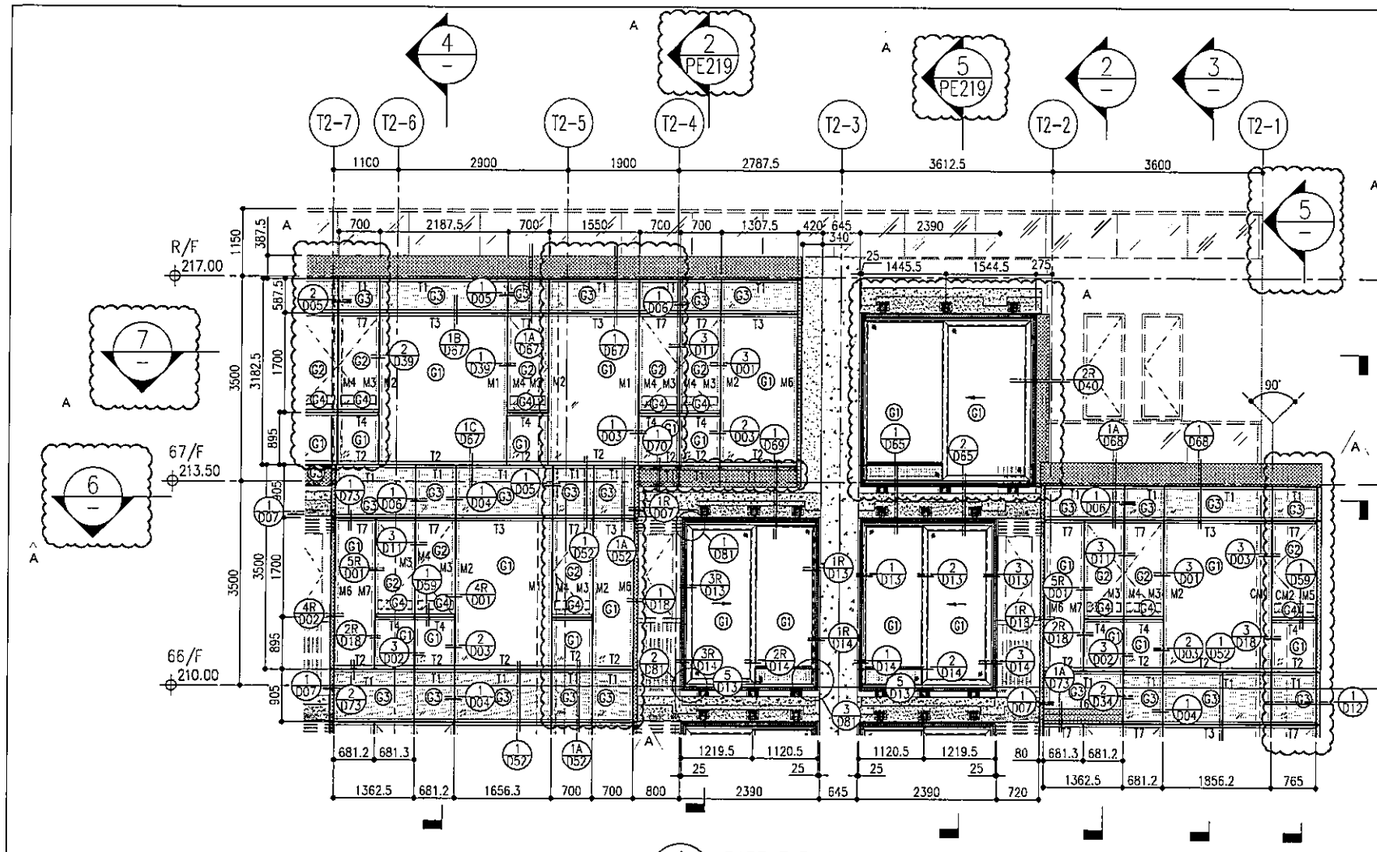

1 / – PART ELEVATION FOR CURTAIN WALL

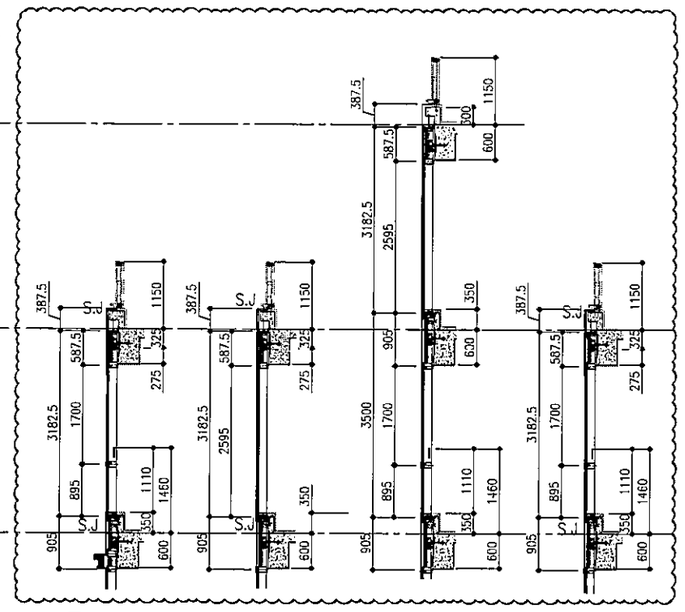

2 / – SECTION

3 / – SECTION

4 / – SECTION

5 / – SECTION

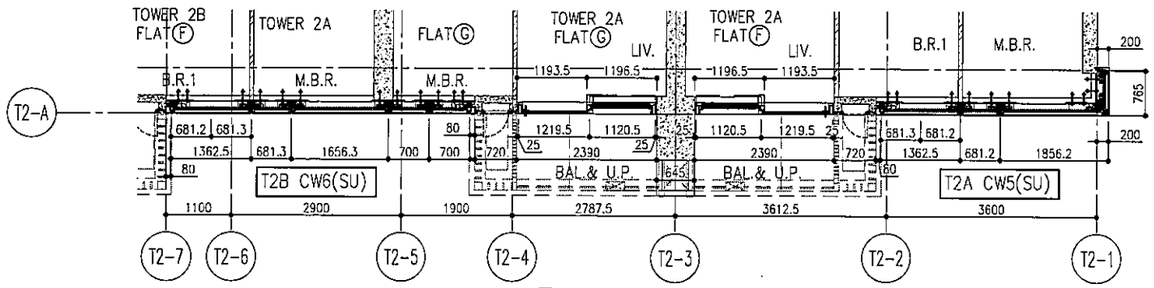

6 / – PART PLAN FOR CURTAIN WALL

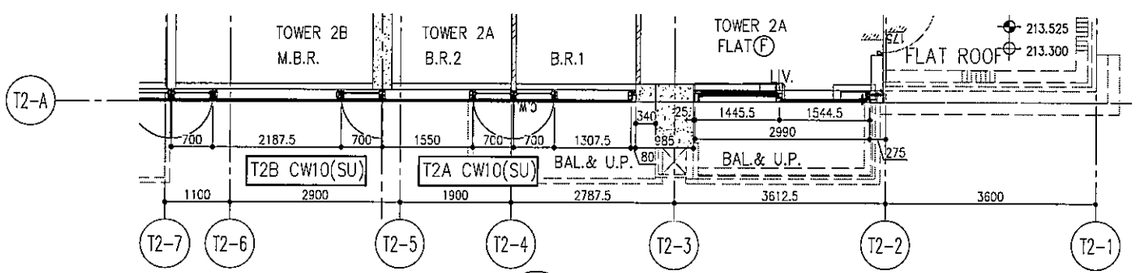

7 / – PART PLAN FOR CURTAIN WALL

LEGEND:

- C1 – 10mm THK. HEAT STRENGTHENED GLASS (OUTSIDE) +12mm AIR SPACE + 12mm THK. TEMPERED GLASS
- C2 – 10mm THK. HEAT STRENGTHENED GLASS (OUTSIDE) +12mm AIR SPACE + 10mm THK. TEMPERED GLASS
- C3 – 12mm THK. HEAT STRENGTHENED GLASS
- C4 – 12mm THK. CLEAR TEMPERED GLASS (INTERNAL PROTECTIVE BARRIER)
- C5 – 12mm CLEAR HEAT STRENGTHENED GLASS
- S1 – 10mm THK. CLEAR HEAT-STRENGTHENED GLASS +12mm AIR SPACE +10mm CLEAR TEMPERED GLASS
- S2 – 8mm THK. CLEAR HEAT-STRENGTHENED GLASS +1.52mm PVB + 8mm THK. CLEAR HEAT-STRENGTHENED GLASS

DELETED

DELETED

- 3 mm THK. ALUM. CLADDING
- 3 mm THK. ALUM. BACKPAN
- S.J. – STACK JOINT

B.D. REF :

CLIENT :
信和置業有限公司
Sino Land Company Limited

ARCHITECT :
ronald lu & partners
Architects . Planners . Interior Designers
Ronald Lu & Partners (HK) Ltd.
呂元祥建築師事務所(香港)有限公司

MAIN CONTRACTOR :
Gammon

STRUCTURAL ENGINEER :
AECOM

FACADE CONSULTANT:
AECOM

NOTE :
1. ALL DIMENSIONS ARE IN mm.
2. ALL ELEVATIONS ARE VIEWED FROM OUTSIDE.
3. ALL DIMENSIONS TO BE VERIFIED ON SITE BEFORE FABRICATION.

LEGEND :
- X1 / XDD1 — DETAIL MARK NO. / REFER SHEET NO.
1. F.F.L. --FINISHED FLOOR LEVEL
2. S.F.L. --STRUCTURAL FLOOR LEVEL
3. (VR) --REVERSED DETAIL

NO.	DATE	REVISED	BY
A	12/04/22	REVISED AS PER COMMENTS	LS

JOB NO. : J-858

PROJECT :
PROPOSED RESIDENTIAL DEVELOPMENT AT TKOTL 70RP, PHASE 11, LOHAS PARK TSEUNG KWAN O, N.T.

TITLE :
PENTHOUSE FLOOR PARTIAL ELEVATION & SECTION, PLAN FOR CURTAIN WALL (TOWER 2)

DATE : 22-OCT-21 | SCALE : 1:50(A1)

DRAWN BY : | CHECKED BY :

美特鋁質有限公司
MIDI ALUMINUM FABRICATOR LTD.
Units 6-8, Sunray Industrial Centre, 1/F
610 Cha Kwo Ling Road, Kowloon
Tel:23489211-4 Fax:(852)27727666

DWG NO. : J858-CW-PE220 | REV. : A

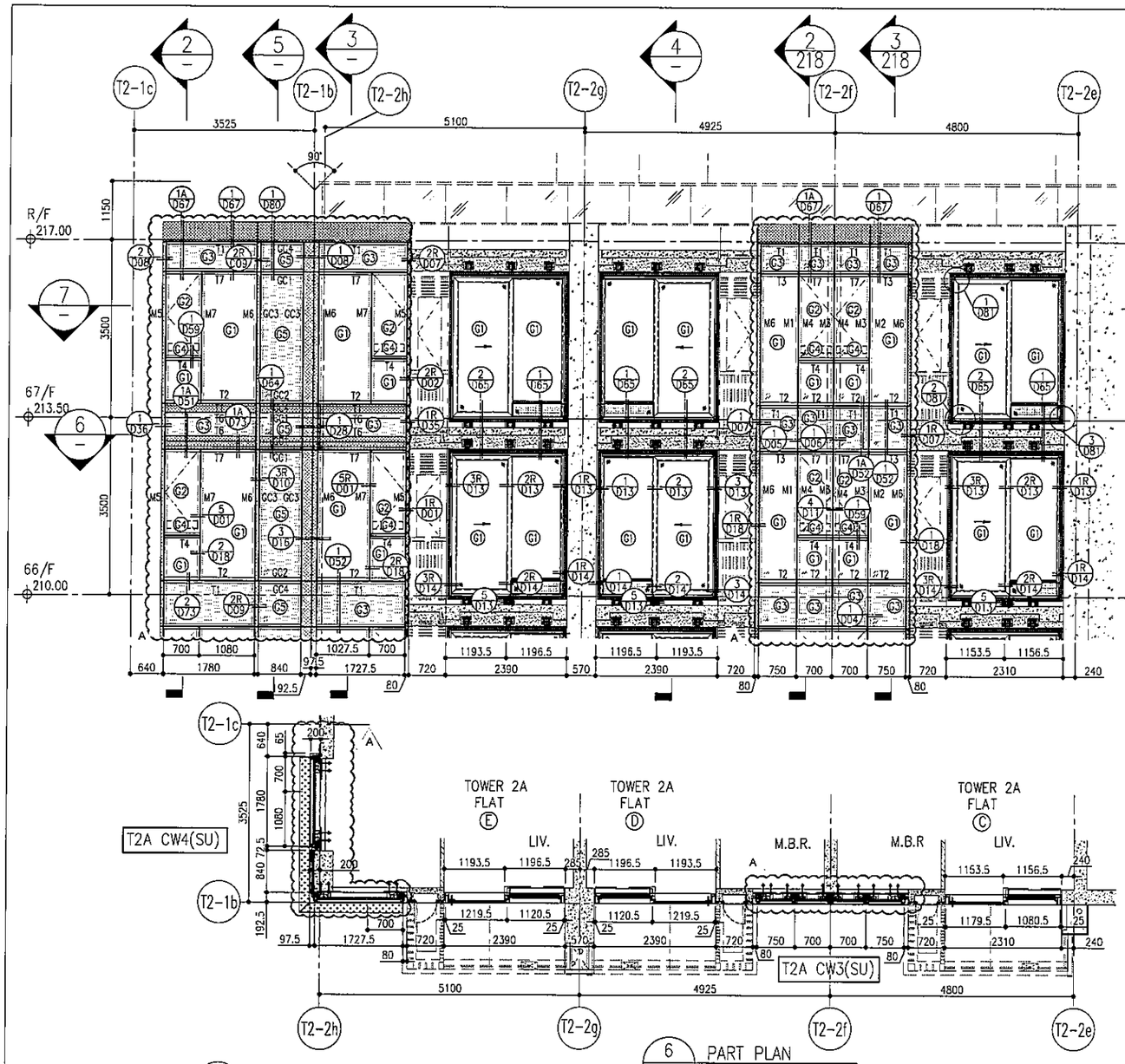

2 SECTION

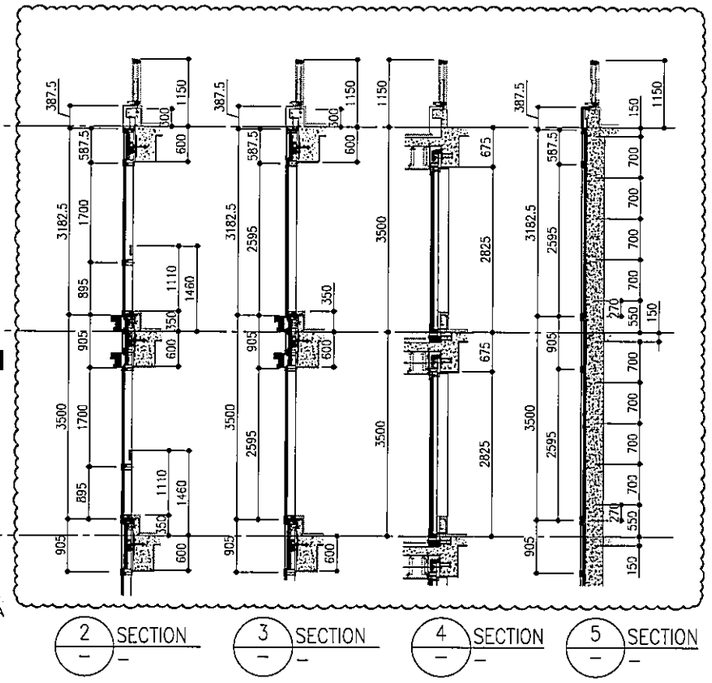

3 SECTION

4 SECTION

5 SECTION

6 PART PLAN FOR CURTAIN WALL

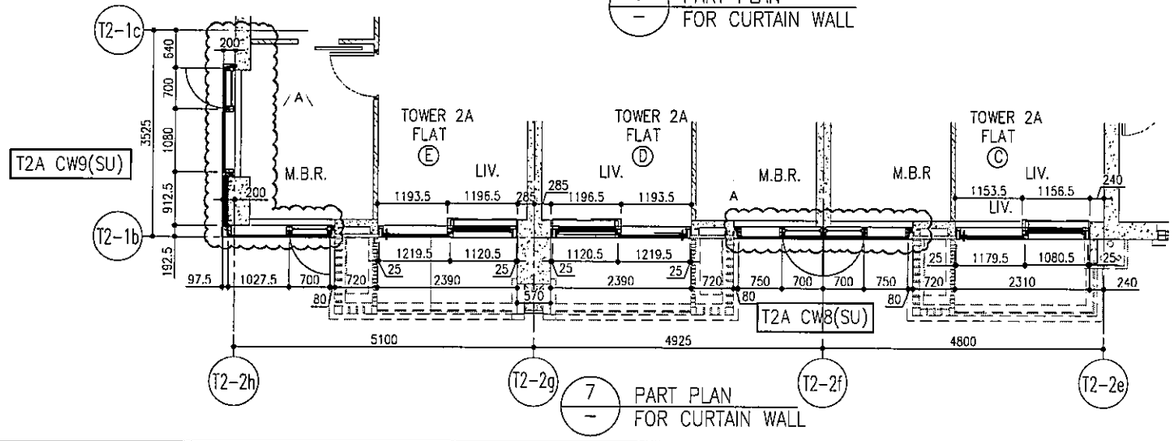

7 PART PLAN FOR CURTAIN WALL

LEGEND:

- G – 10mm THK. HEAT STRENGTHENED GLASS (OUTSIDE) +12mm AIR SPACE + 12mm THK. TEMPERED GLASS
- G2 – 10mm THK. HEAT STRENGTHENED GLASS (OUTSIDE) +12mm AIR SPACE + 10mm THK. TEMPERED GLASS
- G3 – 12mm THK. HEAT STRENGTHENED GLASS
- G4 – 12mm THK. CLEAR TEMPERED GLASS (INTERNAL PROTECTIVE BARRIER)
- G5 – 12mm CLEAR HEAT STRENGTHENED GLASS
- G6 – 10mm THK. CLEAR HEAT-STRENGTHENED GLASS +8mm AIR SPACE +10mm CLEAR TEMPERED GLASS
- G8 – 8mm THK. CLEAR HEAT-STRENGTHENED GLASS +1.52mm PVB + 8mm THK. CLEAR HEAT-STRENGTHENED GLASS
- 3 mm THK. ALUM. CLADDING
- 3 mm THK. ALUM. BACKPAN
- SJ – STACK JOINT

DELETED

DELETED

B.D. REF :

CLIENT :
信和置業有限公司
Sino Land Company Limited

ARCHITECT :
ronald lu & partners
Architects · Planners · Interior Designers
Ronald Lu & Partners (HK) Ltd.
呂元祥建築師事務所(香港)有限公司

MAIN CONTRACTOR :
Gammon

STRUCTURAL ENGINEER :
AECOM

FACADE CONSULTANT:
AECOM

NOTE :
1. ALL DIMENSIONS ARE IN mm.
2. ALL ELEVATIONS ARE VIEWED FROM OUTSIDE.
3. ALL DIMENSIONS TO BE VERIFIED ON SITE BEFORE FABRICATION.

LEGEND :
- X1 / X001 – DETAIL MARK NO. / REFER SHEET NO.

1. F.F.L. --FINISHED FLOOR LEVEL
2. S.F.L. --STRUCTURAL FLOOR LEVEL
3. /R --REVERSED DETAIL

NO.	DATE	REVISED	BY
A	12/04/22	REVISED AS PER COMMENTS	LS

JOB NO. : J-858

PROJECT :
PROPOSED RESIDENTIAL DEVELOPMENT AT TKOTL 70RP, PHASE 11, LOHAS PARK TSEUNG KWAN O, N.T.

TITLE :
PENTHOUSE FLOOR PARTIAL ELEVATION & SECTION, PLAN FOR CURTAIN WALL (TOWER 2)

DATE : 22-OCT-21 | SCALE : 1:50(A1)

DRAWN BY : | CHECKED BY :

美特鋁質有限公司
MIDI ALUMINIUM FABRICATOR LTD.
Units 6-8, Sunray Industrial Centre, 1/F
610 Cha Kwo Ling Road, Kowloon
Tel:23489211-4 Fax:(852)27727666

DWG NO. : J858-CW-PE221 | REV. : A

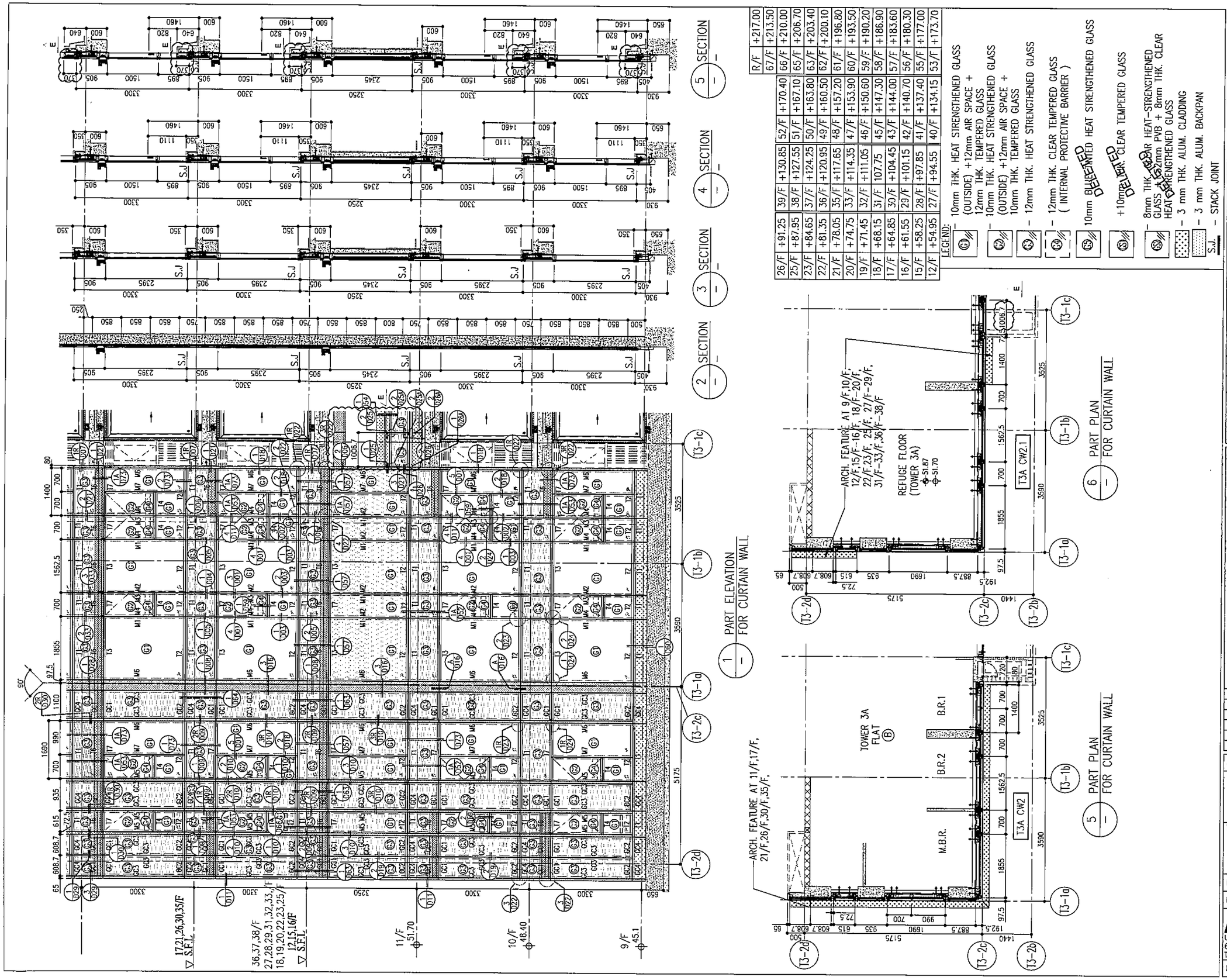
SECTION
PART ELEVATION
FOR CURTAIN WALL
PART PLAN
FOR CURTAIN WALL
ARCH. FEATURE AT 9/F,10/F,
12/F,15/F-16/F, 18/F-20/F,
22/F,23/F, 25/F, 27/F-29/F,
31/F-33/F,36/F-38/F
REFUGE FLOOR
(TOWER 3A)
ARCH. FEATURE AT 11/F,17/F,
21/F,26/F,30/F,35/F,
TOWER 3A
FLAT
B.R.1
B.R.2
M.B.R.
T3A CW2.1
T3A CW2
17,21,26,30,35/F
S.F.L.
36,37,38/F
27,28,29,31,32,33,
18,19,20,22,23,25/F
12,15,16/F
S.F.L.
11/F
51.70
10/F
48.40
9/F
45.1

| | | |

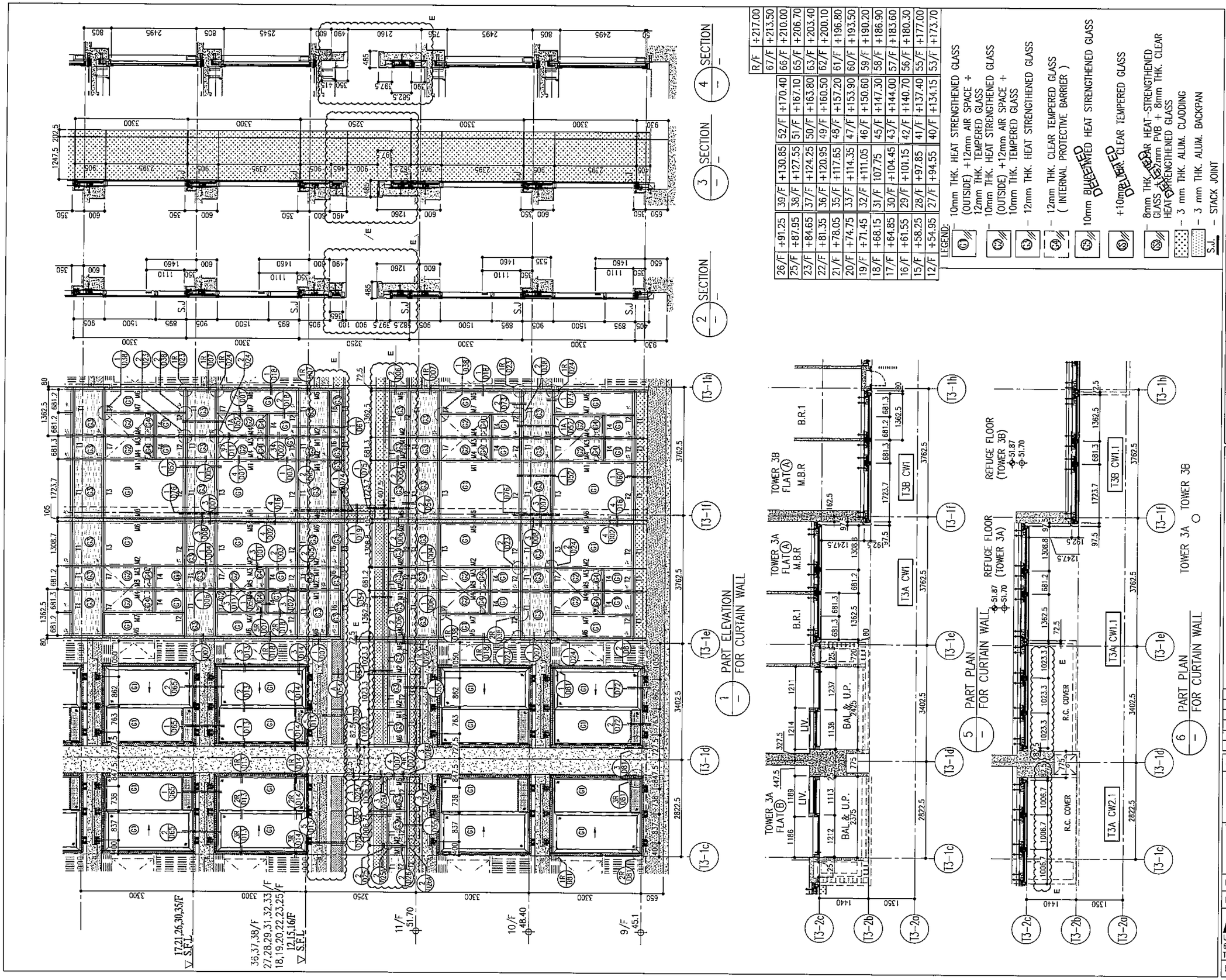

R/F	+217.00
67/F	+213.50
66/F	+210.00
65/F	+206.70
63/F	+203.40
62/F	+200.10
61/F	+196.80
60/F	+193.50
59/F	+190.20
58/F	+186.90
57/F	+183.60
56/F	+180.30
55/F	+177.00
53/F	+173.70
52/F	+170.40
51/F	+167.10
50/F	+163.80
49/F	+160.50
48/F	+157.20
47/F	+153.90
46/F	+150.60
45/F	+147.30
43/F	+144.00
42/F	+140.70
41/F	+137.40
40/F	+134.15
39/F	+130.85
38/F	+127.55
37/F	+124.25
36/F	+120.95
35/F	+117.65
33/F	+114.35
32/F	+111.05
31/F	107.75
30/F	+104.45
29/F	+101.15
28/F	+97.85
27/F	+94.55
26/F	+91.25
25/F	+87.95
23/F	+84.65
22/F	+81.35
21/F	+78.05
20/F	+74.75
19/F	+71.45
18/F	+68.15
17/F	+64.85
16/F	+61.55
15/F	+58.25
12/F	+54.95

LEGEND:

- (G1) 10mm THK. HEAT STRENGTHENED GLASS (OUTSIDE) +12mm AIR SPACE + 12mm THK. TEMPERED GLASS
- (G2) 10mm THK. HEAT STRENGTHENED GLASS (OUTSIDE) +12mm AIR SPACE + 10mm THK. TEMPERED GLASS
- (G3) – 12mm THK. HEAT STRENGTHENED GLASS
- (G4) – 12mm THK. CLEAR TEMPERED GLASS (INTERNAL PROTECTIVE BARRIER)
- (G5) 10mm ~~BLUE~~ HEAT STRENGTHENED GLASS ~~DEEMED~~
- (G6) +10mm ~~BLUE~~ CLEAR TEMPERED GLASS ~~DELETED~~
- (G7) 8mm THK. CLEAR HEAT-STRENGTHENED GLASS + 2.52mm PVB + 8mm THK. CLEAR HEAT-STRENGTHENED GLASS
- – 3 mm THK. ALUM. CLADDING
- – 3 mm THK. ALUM. BACKPAN
- S.J. – STACK JOINT

B.D. REF :

CLIENT :
信和置業有限公司
Sino Land Company Limited

ARCHITECT :
ronald lu & partners
Architects . Planners . Interior Designers
Ronald Lu & Partners (HK) Ltd.
呂元祥建築師事務所(香港)有限公司

MAIN CONTRACTOR :
Gammon

STRUCTURAL ENGINEER :
AECOM

FACADE CONSULTANT:
AECOM

NOTE :
1. ALL DIMENSIONS ARE IN mm.
2. ALL ELEVATIONS ARE VIEWED FROM OUTSIDE.
3. ALL DIMENSIONS TO BE VERIFIED ON SITE BEFORE FABRICATION.

LEGEND :
- X1 / X001 — DETAIL MARK NO. / REFER SHEET NO.
1. F.F.L. --FINISHED FLOOR LEVEL
2. S.F.L. --STRUCTURAL FLOOR LEVEL
3. /R --REVERSED DETAIL

NO.	DATE	REVISED	BY
E	25/05/22	REVISED AS PER COMMENTS	LS
D	22/04/06	REVISED AS PER COMMENTS	LS
C	22/01/22	REVISED AS PER COMMENTS	LS
B	20/12/21	REVISED AS PER COMMENTS	LS
A	03/12/21	REVISED AS PER COMMENTS	LS

JOB NO. : J-858

PROJECT :
PROPOSED RESIDENTIAL DEVELOPMENT
AT TKOTL 70RP, PHASE 11, LOHAS PARK
TSEUNG KWAN O, N.T.

TITLE :
TYPICAL FLOOR PARTIAL ELEVATION & SECTION, PLAN FOR CURTAIN WALL (TOWER 3)

DATE : 22-OCT-21 | SCALE : 1:50(A1)

DRAWN BY : | CHECKED BY :

美特鋁質有限公司
MIDI ALUMINIUM FABRICATOR LTD.
Units 6-8, Sunray Industrial Centre, 1/F
610 Cha Kwo Ling Road, Kowloon
Tel:23489211-4 Fax:(852)27727666

DWG NO. : J858-CW-PE302 | REV. : E

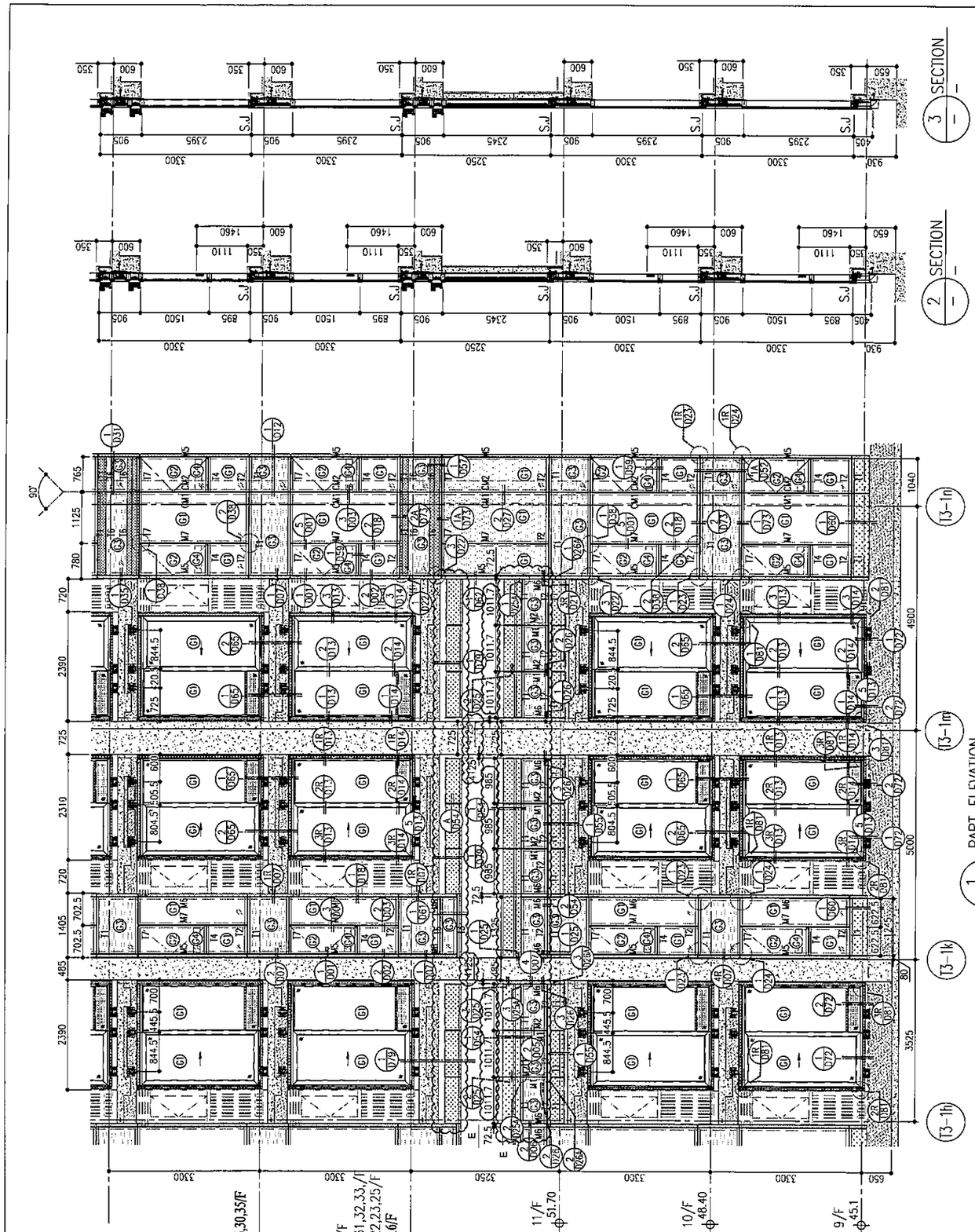

ARCH. FEATURE AT 11/F,17/F, 21/F,26/F,30/F,35/F,

R/F	+217.00								
67/F	+213.50								
66/F	+210.00								
65/F	+206.70								
63/F	+203.40								
62/F	+200.10								
61/F	+196.80								
60/F	+193.50								
59/F	+190.20								
58/F	+186.90								
57/F	+183.60								
56/F	+180.30								
55/F	+177.00								
53/F	+173.70								
52/F	+170.40								
51/F	+167.10								
50/F	+163.80								
49/F	+160.50								
48/F	+157.20								
47/F	+153.90								
46/F	+150.60								
45/F	+147.30								
43/F	+144.00								
42/F	+140.70								
41/F	+137.40								
40/F	+134.15								
39/F	+130.85								
38/F	+127.55								
37/F	+124.25								
36/F	+120.95								
35/F	+117.65								
33/F	+114.35								
32/F	+111.05								
31/F	107.75								
30/F	+104.45								
29/F	+101.15								
28/F	+97.85								
27/F	+94.55								
26/F	+91.25								
25/F	+87.95								
23/F	+84.65								
22/F	+81.35								
21/F	+78.05								
20/F	+74.75								
19/F	+71.45								
18/F	+68.15								
17/F	+64.85								
16/F	+61.55								
15/F	+58.25								
12/F	+54.95								

LEGEND:

- G1 – 10mm THK. HEAT STRENGTHENED GLASS (OUTSIDE) +12mm AIR SPACE + 12mm THK. TEMPERED GLASS
- G2 – 10mm THK. HEAT STRENGTHENED GLASS (OUTSIDE) +12mm AIR SPACE + 10mm THK. TEMPERED GLASS
- G3 – 12mm THK. HEAT STRENGTHENED GLASS
- G4 – 12mm THK. CLEAR TEMPERED GLASS (INTERNAL PROTECTIVE BARRIER)
- G5 – 10mm ~~BLUE~~TINTED HEAT STRENGTHENED GLASS
- G6 – +10mm ~~BLUE~~TINTED CLEAR TEMPERED GLASS
- G7 – 8mm THK. CLEAR HEAT-STRENGTHENED GLASS + 2mm PVB + 8mm THK. CLEAR HEAT-STRENGTHENED GLASS
- – 3 mm THK. ALUM. CLADDING
- – 3 mm THK. ALUM. BACKPAN
- S.J – STACK JOINT

B.D. REF :

CLIENT :
信和置業有限公司
Sino Land Company Limited

ARCHITECT :
ronald lu & partners
Architects . Planners . Interior Designers
Ronald Lu & Partners (HK) Ltd.
呂元祥建築師事務所(香港)有限公司

MAIN CONTRACTOR :
Gammon

STRUCTURAL ENGINEER :
AECOM

FACADE CONSULTANT:
AECOM

NOTE :
1. ALL DIMENSIONS ARE IN mm.
2. ALL ELEVATIONS ARE VIEWED FROM OUTSIDE.
3. ALL DIMENSIONS TO BE VERIFIED ON SITE BEFORE FABRICATION.

LEGEND :
- K1 / X001 – DETAIL MARK NO. / REFER SHEET NO.
1. F.F.L. --FINISHED FLOOR LEVEL
2. S.F.L. --STRUCTURAL FLOOR LEVEL
3. /R --REVERSED DETAIL

NO.	DATE	REVISED	BY
E	25/05/22	REVISED AS PER COMMENTS	LS
D	22/04/06	REVISED AS PER COMMENTS	LS
C	22/01/22	REVISED AS PER COMMENTS	LS
B	20/12/21	REVISED AS PER COMMENTS	LS
A	03/12/21	REVISED AS PER COMMENTS	LS

JOB NO. : J-858

PROJECT :
PROPOSED RESIDENTIAL DEVELOPMENT
AT TKOTL 70RP, PHASE 11, LOHAS PARK
TSEUNG KWAN O, N.T.

TITLE :
TYPICAL FLOOR PARTIAL ELEVATION & SECTION, PLAN FOR CURTAIN WALL (TOWER 3)

DATE : 22-OCT-21 | SCALE : 1:50(A1)

DRAWN BY : | CHECKED BY :

美特鋁質有限公司
MIDI ALUMINIUM FABRICATOR LTD.
Units 6-8, Sunray Industrial Centre, 1/F
610 Cha Kwo Ling Road, Kowloon
Tel:23489211-4 Fax:(852)27727666

DWG NO. : J858-CW-PE303 | REV. : E

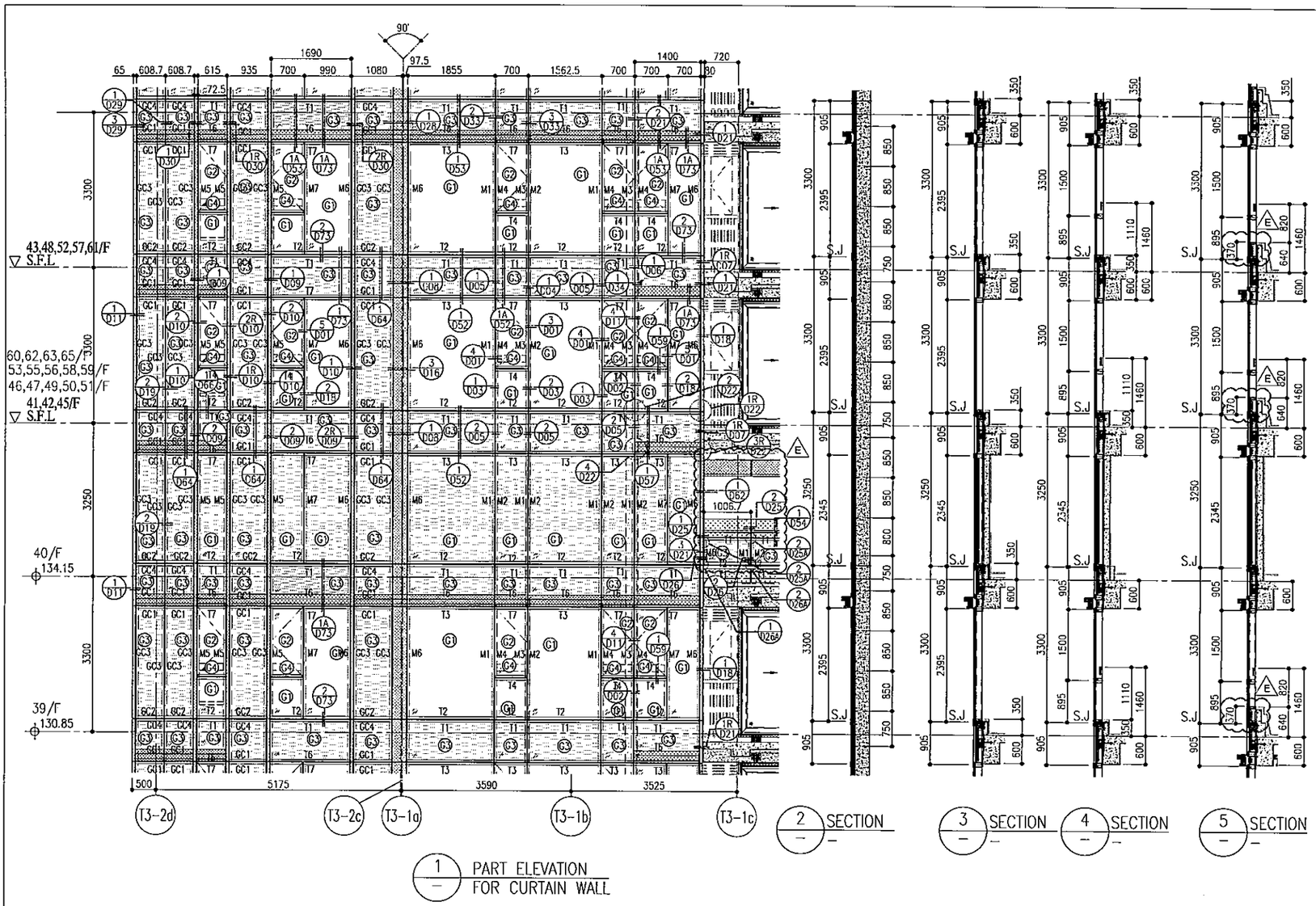

1 PART ELEVATION FOR CURTAIN WALL

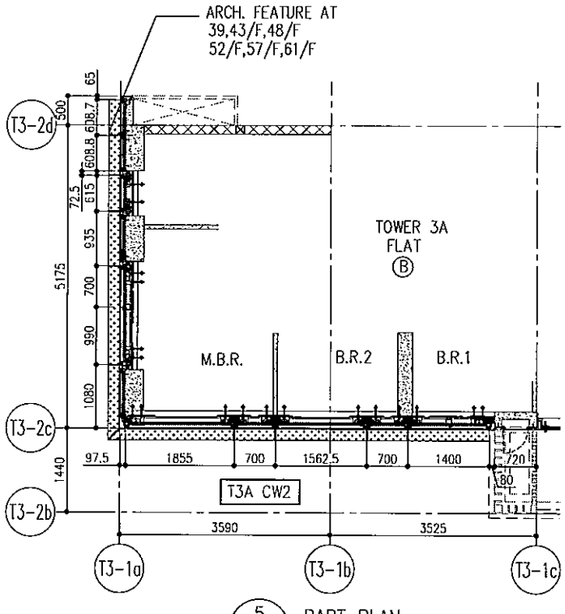

5 PART PLAN FOR CURTAIN WALL

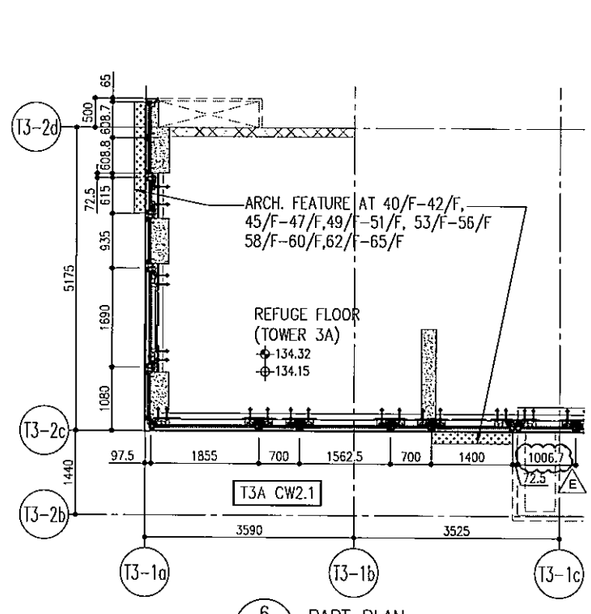

6 PART PLAN FOR CURTAIN WALL

						R/F	+217.00		
						67/F	+213.50		
26/F	+91.25	39/F	+130.85	52/F	+170.40	66/F	+210.00		
25/F	+87.95	38/F	+127.55	51/F	+167.10	65/F	+206.70		
23/F	+84.65	37/F	+124.25	50/F	+163.80	63/F	+203.40		
22/F	+81.35	36/F	+120.95	49/F	+160.50	62/F	+200.10		
21/F	+78.05	35/F	+117.65	48/F	+157.20	61/F	+196.80		
20/F	+74.75	33/F	+114.35	47/F	+153.90	60/F	+193.50		
19/F	+71.45	32/F	+111.05	46/F	+150.60	59/F	+190.20		
18/F	+68.15	31/F	107.75	45/F	+147.30	58/F	+186.90		
17/F	+64.85	30/F	+104.45	43/F	+144.00	57/F	+183.60		
16/F	+61.55	29/F	+101.15	42/F	+140.70	56/F	+180.30		
15/F	+58.25	28/F	+97.85	41/F	+137.40	55/F	+177.00		
12/F	+54.95	27/F	+94.55	40/F	+134.15	53/F	+173.70		

LEGEND:

- G1 – 10mm THK. HEAT STRENGTHENED GLASS (OUTSIDE) +12mm AIR SPACE + 12mm THK. TEMPERED GLASS
- G2 – 10mm THK. HEAT STRENGTHENED GLASS (OUTSIDE) +12mm AIR SPACE + 10mm THK. TEMPERED GLASS
- G3 – 12mm THK. HEAT STRENGTHENED GLASS
- G4 – 12mm THK. CLEAR TEMPERED GLASS (INTERNAL PROTECTIVE BARRIER)
- G5 – 10mm BLUE TINTED HEAT STRENGTHENED GLASS DELETED
- G6 – +10mm THK. CLEAR TEMPERED GLASS DELETED
- G7 – 8mm THK. CLEAR HEAT-STRENGTHENED GLASS +2mm PVB + 8mm THK. CLEAR HEAT STRENGTHENED GLASS DELETED
- 3 mm THK. ALUM. CLADDING
- 3 mm THK. ALUM. BACKPAN
- S.J. – STACK JOINT

NOTE:
1. ALL DIMENSIONS ARE IN mm.
2. ALL ELEVATIONS ARE VIEWED FROM OUTSIDE.
3. ALL DIMENSIONS TO BE VERIFIED ON SITE BEFORE FABRICATION.

LEGEND:
- X1 (WD01) — DETAIL MARK NO. / REFER SHEET NO.
1. F.F.L. --FINISHED FLOOR LEVEL
2. S.F.L. --STRUCTURAL FLOOR LEVEL
3. (R) --REVERSED DETAIL

NO.	DATE	REMARK	BY
E	25/05/22	REVISED AS PER COMMENTS	LS
D	22/04/06	REVISED AS PER COMMENTS	LS
C	22/01/22	REVISED AS PER COMMENTS	LS
B	20/12/21	REVISED AS PER COMMENTS	LS
A	03/12/21	REVISED AS PER COMMENTS	LS

PROJECT : PROPOSED RESIDENTIAL DEVELOPMENT AT TKOTL 70RP, PHASE 11, LOHAS PARK TSEUNG KWAN O, N.T.

JOB NO. : J-858

TITLE : TYPICAL FLOOR PARTIAL ELEVATION & SECTION, PLAN FOR CURTAIN WALL (TOWER 3)

DATE : 22-OCT-21 | SCALE : 1:50(A1)

DRAWN BY : | CHECKED BY :

DWG NO. : JB58-CW-PE304 | REV. : E

美特鋁廠有限公司 MIDI ALUMINIUM FABRICATOR LTD.
Units 6-8, Sunray Industrial Centre, 1/F
610 Cha Kwo Ling Road, Kowloon
Tel:23469211-4 Fax:85521727666

CLIENT : 信和置業有限公司 Sino Land Company Limited

ARCHITECT : ronald lu & partners (HONG KONG) Architects Planners Interior Designers Ronald Lu & Partners (HK) Ltd. 呂元祥建築師事務所(香港)有限公司

MAIN CONTRACTOR : Gammon

STRUCTURAL ENGINEER : AECOM

FACADE CONSULTANT: AECOM

B.D. REF :

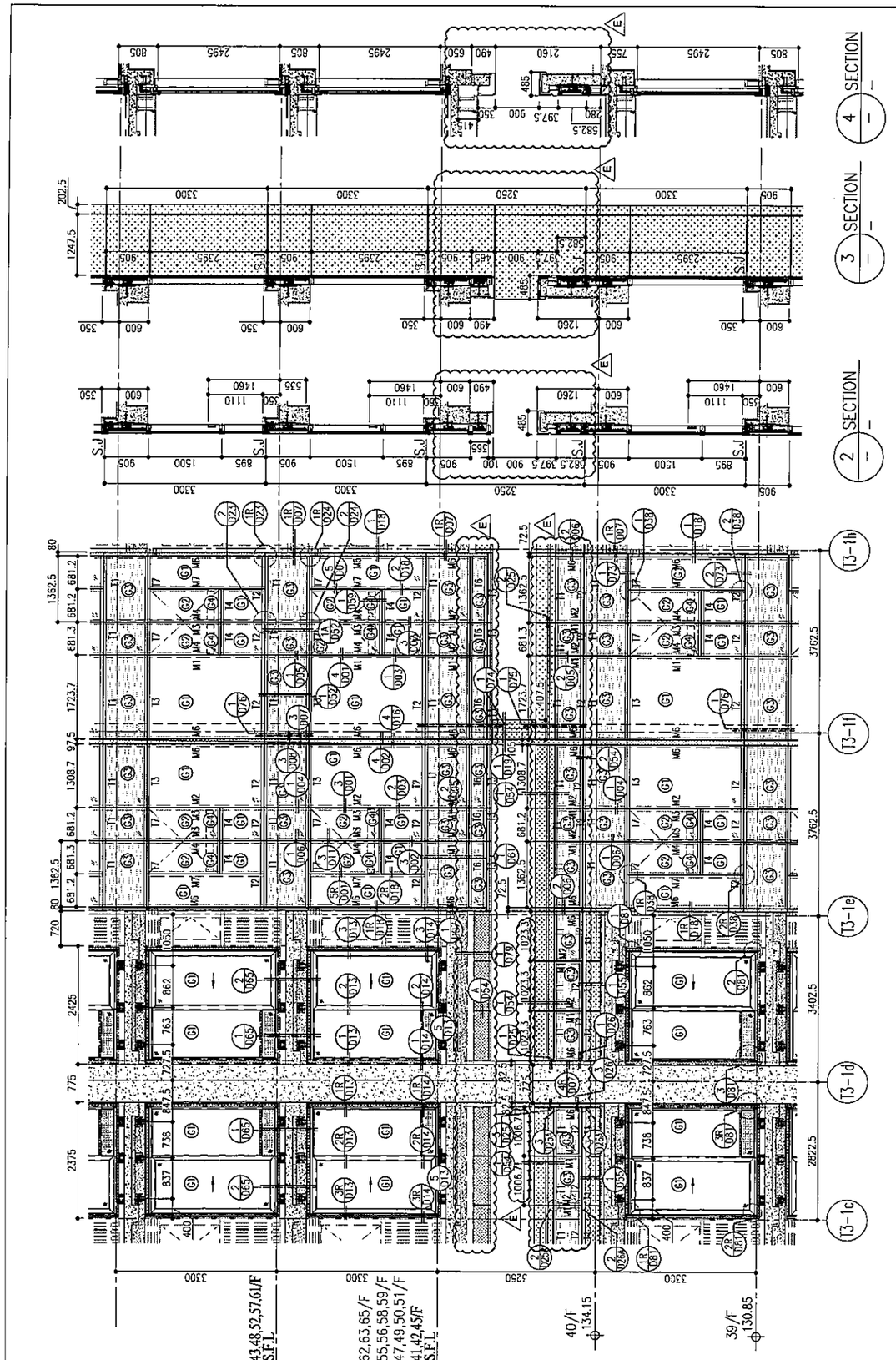

R/F	+217.00	
67/F	+213.50	
66/F	+210.00	
65/F	+206.70	
64/F	+203.40	
63/F	+200.10	
62/F	+196.80	
61/F	+193.50	
60/F	+190.20	
59/F	+186.90	
58/F	+183.60	
57/F	+180.30	
56/F	+177.00	
55/F	+173.70	
53/F	+170.40	
52/F	+167.10	
51/F	+163.80	
50/F	+160.50	
49/F	+157.20	
48/F	+153.90	
47/F	+150.60	
46/F	+147.30	
45/F	+144.00	
43/F	+140.70	
42/F	+137.40	
41/F	+134.15	
40/F	+130.85	
39/F	+127.55	
38/F	+124.25	
37/F	+120.95	
36/F	+117.65	
35/F	+114.35	
33/F	+111.05	
32/F	+107.75	
31/F	+104.45	
30/F	+101.15	
29/F	+97.85	
28/F	+94.55	
27/F	+91.25	
26/F	+87.95	
25/F	+84.65	
23/F	+81.35	
22/F	+78.05	
21/F	+74.75	
20/F	+71.45	
19/F	+68.15	
18/F	+64.85	
17/F	+61.55	
16/F	+58.25	
15/F	+54.95	
12/F		

LEGEND:

- (G1) 10mm THK. HEAT STRENGTHENED GLASS (OUTSIDE) +12mm AIR SPACE + 12mm THK. TEMPERED GLASS
- (G2) 10mm THK. HEAT STRENGTHENED GLASS (OUTSIDE) +12mm AIR SPACE + 10mm THK. TEMPERED GLASS
- (G3) – 12mm THK. HEAT STRENGTHENED GLASS
- (G4) – 12mm THK. CLEAR TEMPERED GLASS (INTERNAL PROTECTIVE BARRIER)
- (G5) 10mm BLUE TINTED DEEMED HEAT STRENGTHENED GLASS
- (G6) +10mm BLUE TINTED DEEMED CLEAR TEMPERED GLASS
- (G7) – 8mm THK. CLEAR HEAT-STRENGTHENED GLASS +12mm PVB + 8mm THK. CLEAR HEAT STRENGTHENED GLASS
- – 3 mm THK. ALUM. CLADDING
- – 3 mm THK. ALUM. BACKPAN
- S.J – STACK JOINT

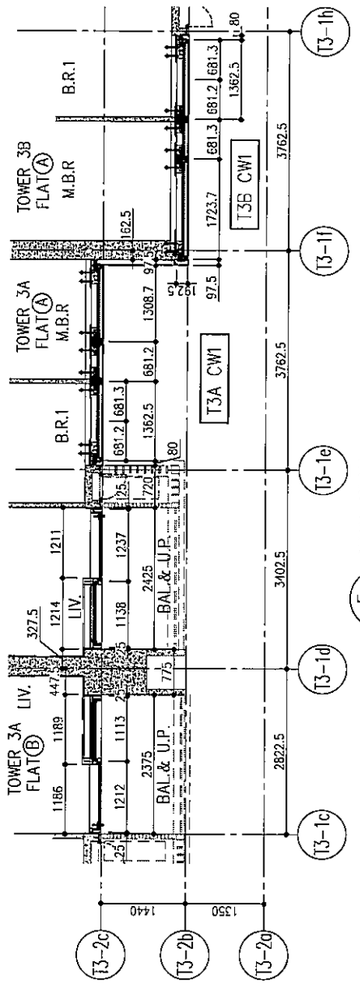

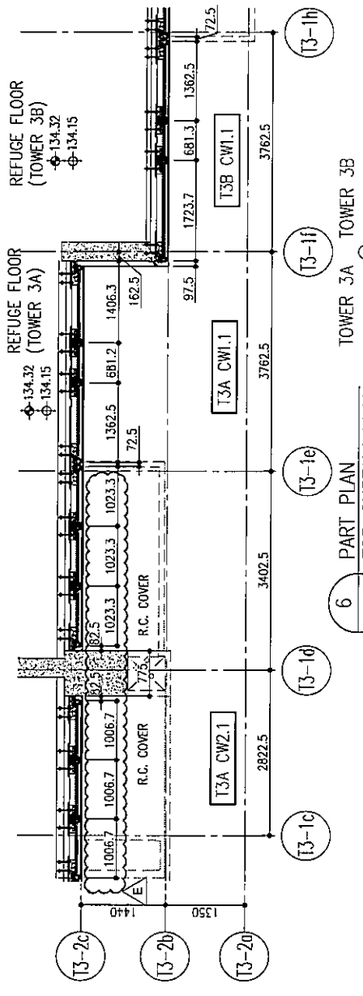

B.D. REF :

CLIENT :
信和置業有限公司
Sino Land Company Limited

ARCHITECT :
ronald lu & partners
Architects . Planners . Interior Designers
Ronald Lu & Partners (HK) Ltd.
呂元祥建築師事務所(香港)有限公司

MAIN CONTRACTOR :
Gammon

STRUCTURAL ENGINEER :
AECOM

FACADE CONSULTANT:
AECOM

NOTE :
1. ALL DIMENSIONS ARE IN mm.
2. ALL ELEVATIONS ARE VIEWED FROM OUTSIDE.
3. ALL DIMENSIONS TO BE VERIFIED ON SITE BEFORE FABRICATION.

LEGEND :
- X1 / X001 — DETAIL MARK NO. / REFER SHEET NO.
1. F.F.L. --FINISHED FLOOR LEVEL
2. S.F.L --STRUCTURAL FLOOR LEVEL
3. (R) --REVERSED DETAIL

NO.	DATE	REVISED	BY
E	25/05/22	REVISED AS PER COMMENTS	LS
D	22/04/06	REVISED AS PER COMMENTS	LS
C	22/01/22	REVISED AS PER COMMENTS	LS
B	20/12/21	REVISED AS PER COMMENTS	LS
A	03/12/21	REVISED AS PER COMMENTS	LS

JOB NO. : J-858

PROJECT :
PROPOSED RESIDENTIAL DEVELOPMENT
AT TKOTL 70RP, PHASE 11, LOHAS PARK
TSEUNG KWAN O, N.T.

TITLE :
TYPICAL FLOOR PARTIAL ELEVATION & SECTION, PLAN FOR CURTAIN WALL (TOWER 3)

DATE : 22-OCT-21 | SCALE : 1:50(A1)

DRAWN BY : | CHECKED BY :

美特鋁質有限公司
MIDI ALUMINIUM FABRICATOR LTD.
Units 6-8, Sunray Industrial Centre, 1/F
610 Cha Kwo Ling Road, Kowloon
Tel:23469211-4 Fax:(852)27727666

DWG NO. : J858-CW-PE305 | REV. : E

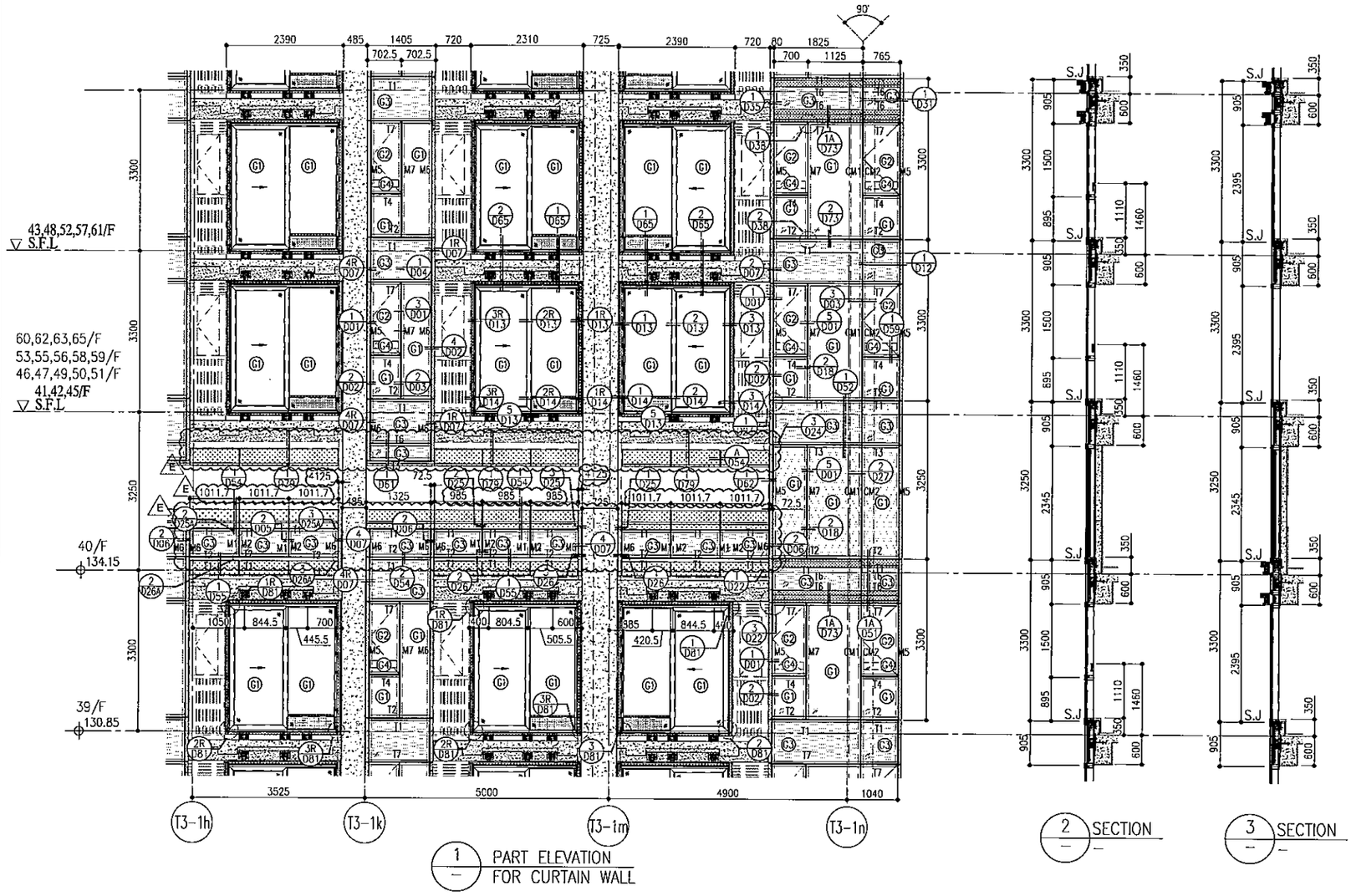

1 PART ELEVATION FOR CURTAIN WALL

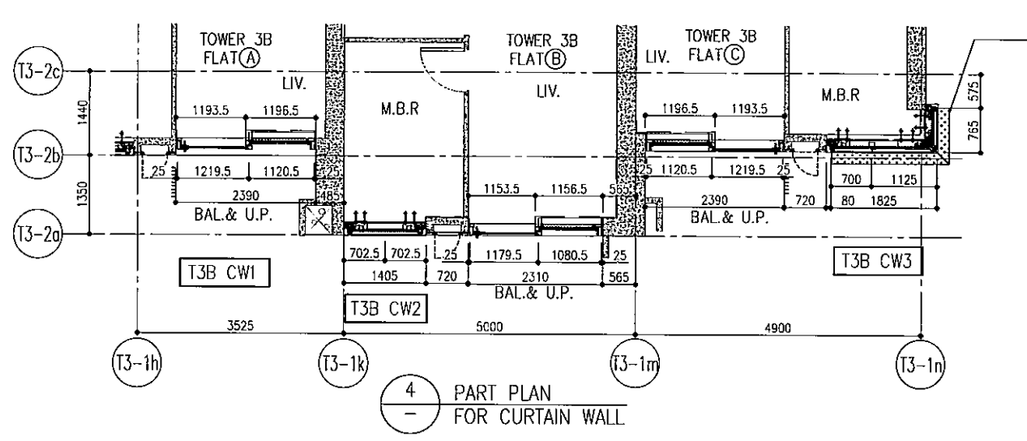

4 PART PLAN FOR CURTAIN WALL

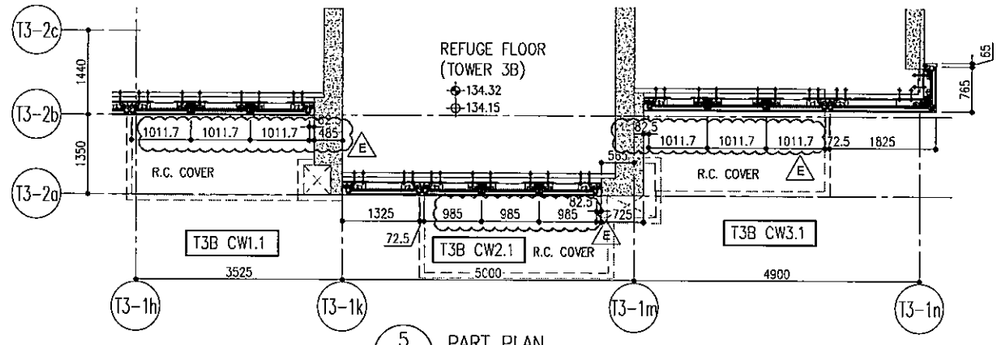

5 PART PLAN FOR CURTAIN WALL

						R/F	+217.00
						67/F	+213.50
26/F	+91.25	39/F	+130.85	52/F	+170.40	66/F	+210.00
25/F	+87.95	38/F	+127.55	51/F	+167.10	65/F	+206.70
23/F	+84.65	37/F	+124.25	50/F	+163.80	63/F	+203.40
22/F	+81.35	36/F	+120.95	49/F	+160.50	62/F	+200.10
21/F	+78.05	35/F	+117.65	48/F	+157.20	61/F	+196.80
20/F	+74.75	33/F	+114.35	47/F	+153.90	60/F	+193.50
19/F	+71.45	32/F	+111.05	46/F	+150.60	59/F	+190.20
18/F	+68.15	31/F	107.75	45/F	+147.30	58/F	+186.90
17/F	+64.85	30/F	+104.45	43/F	+144.00	57/F	+183.60
16/F	+61.55	29/F	+101.15	42/F	+140.70	56/F	+180.30
15/F	+58.25	28/F	+97.85	41/F	+137.40	55/F	+177.00
12/F	+54.95	27/F	+94.55	40/F	+134.15	53/F	+173.70

LEGEND:

- G1 — 10mm THK. HEAT STRENGTHENED GLASS (OUTSIDE) +12mm AIR SPACE + 12mm THK. TEMPERED GLASS
- G2 — 10mm THK. HEAT STRENGTHENED GLASS (OUTSIDE) +12mm AIR SPACE + 10mm THK. TEMPERED GLASS
- G3 — 12mm THK. HEAT STRENGTHENED GLASS
- G4 — 12mm THK. CLEAR TEMPERED GLASS (INTERNAL PROTECTIVE BARRIER)
- G5 — 10mm BLUE/GREY TINTED HEAT STRENGTHENED GLASS DELETED
- G6 — +10mm THK. CLEAR TEMPERED GLASS DELETED
- G7 — 8mm THK. CLEAR HEAT-STRENGTHENED GLASS + 2mm PVB + 8mm THK. CLEAR HEAT STRENGTHENED GLASS DELETED
- 3 mm THK. ALUM. CLADDING
- 3 mm THK. ALUM. BACKPAN
- S.J. — STACK JOINT

NOTE :
1. ALL DIMENSIONS ARE IN mm.
2. ALL ELEVATIONS ARE VIEWED FROM OUTSIDE.
3. ALL DIMENSIONS TO BE VERIFIED ON SITE BEFORE FABRICATION.

LEGEND :
- X1 / X001 — DETAIL MARK NO. / REFER SHEET NO.
1. F.F.L. --- FINISHED FLOOR LEVEL
2. S.F.L. --- STRUCTURAL FLOOR LEVEL
3. /R --- REVERSED DETAIL

NO.	DATE	REMARKS	BY
E	25/05/22	REVISED AS PER COMMENTS	LS
D	22/04/06	REVISED AS PER COMMENTS	LS
C	22/01/22	REVISED AS PER COMMENTS	LS
B	20/12/21	REVISED AS PER COMMENTS	LS
A	03/12/21	REVISED AS PER COMMENTS	LS

JOB NO. : J-858

PROJECT :
PROPOSED RESIDENTIAL DEVELOPMENT
AT TKOTL 70RP, PHASE 11, LOHAS PARK
TSEUNG KWAN O, N.T.

TITLE :
TYPICAL FLOOR PARTIAL
ELEVATION & SECTION, PLAN
FOR CURTAIN WALL (TOWER 3)

DATE : 22-OCT-21 | SCALE : 1:50(A1)
DRAWN BY : | CHECKED BY :
DWG NO. : J858-CW-PE306 | REV. : E

美特鋁質有限公司
MIDI ALUMINIUM FABRICATOR LTD.
Units 6-8, Sunray Industrial Centre, 1/F
610 Cha Kwo Ling Road, Kowloon
Tel:23489211-4 Fax:(852)27727666

FACADE CONSULTANT: AECOM
STRUCTURAL ENGINEER: AECOM
Gammon
MAIN CONTRACTOR :
ARCHITECT: ronald lu & partners
Ronald Lu & Partners (HK) Ltd.
呂元祥建築師事務所(香港)有限公司
CLIENT : 信和置業有限公司 Sino Land Company Limited
B.D. REF :

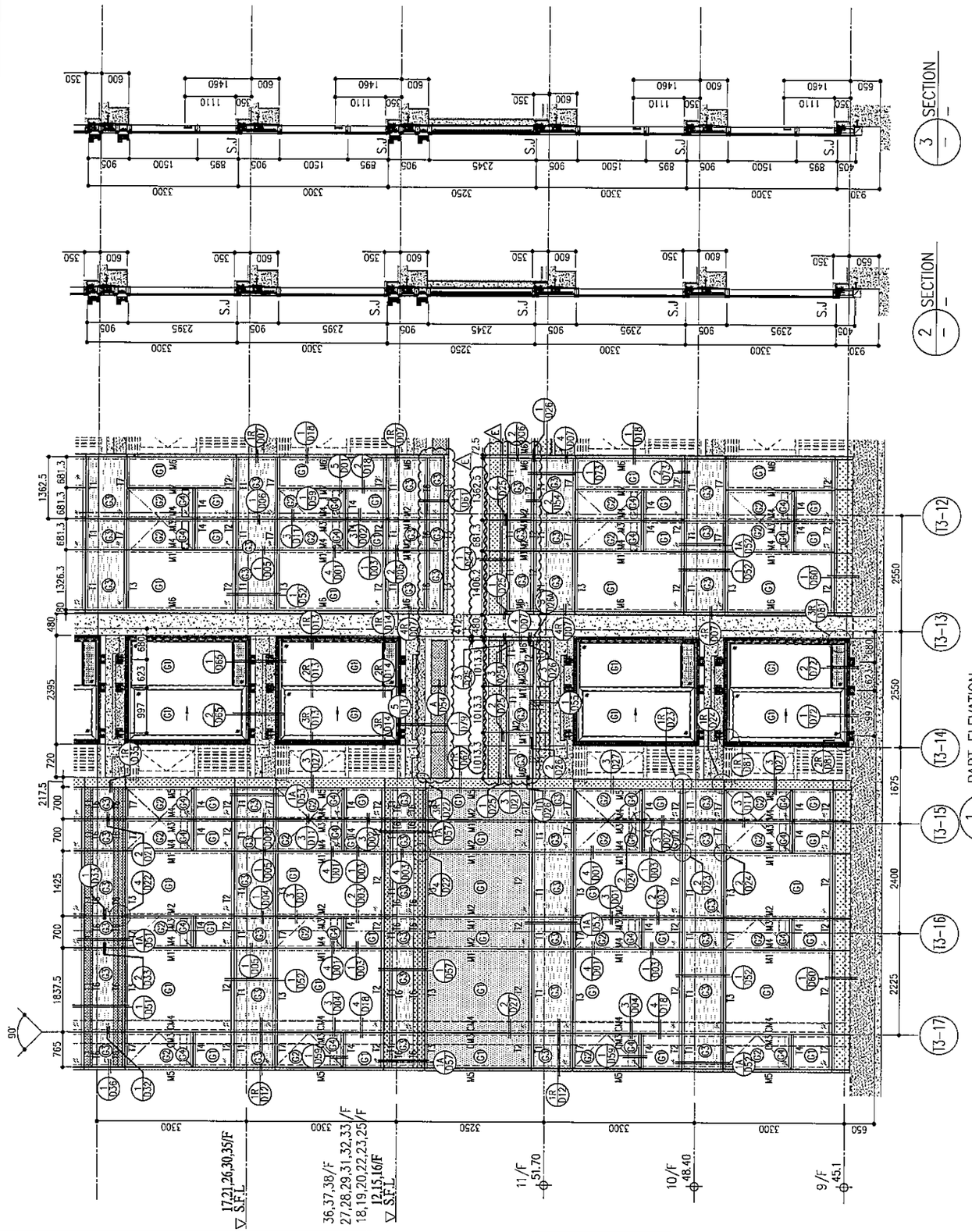

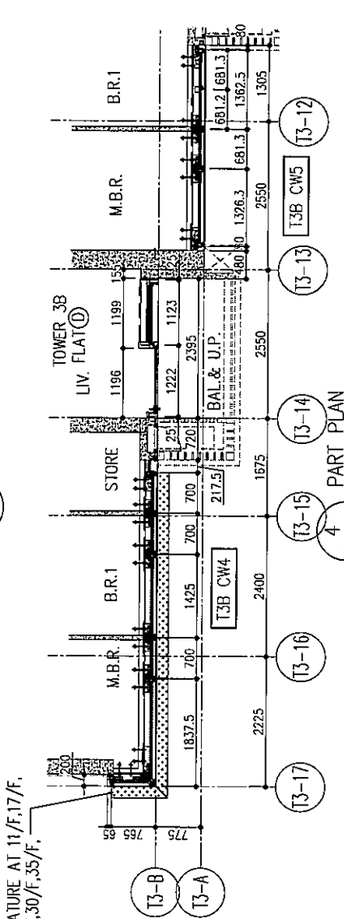

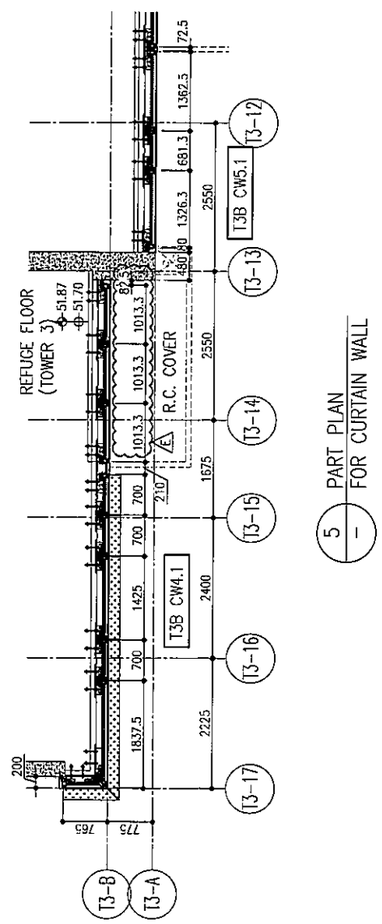

| | | |

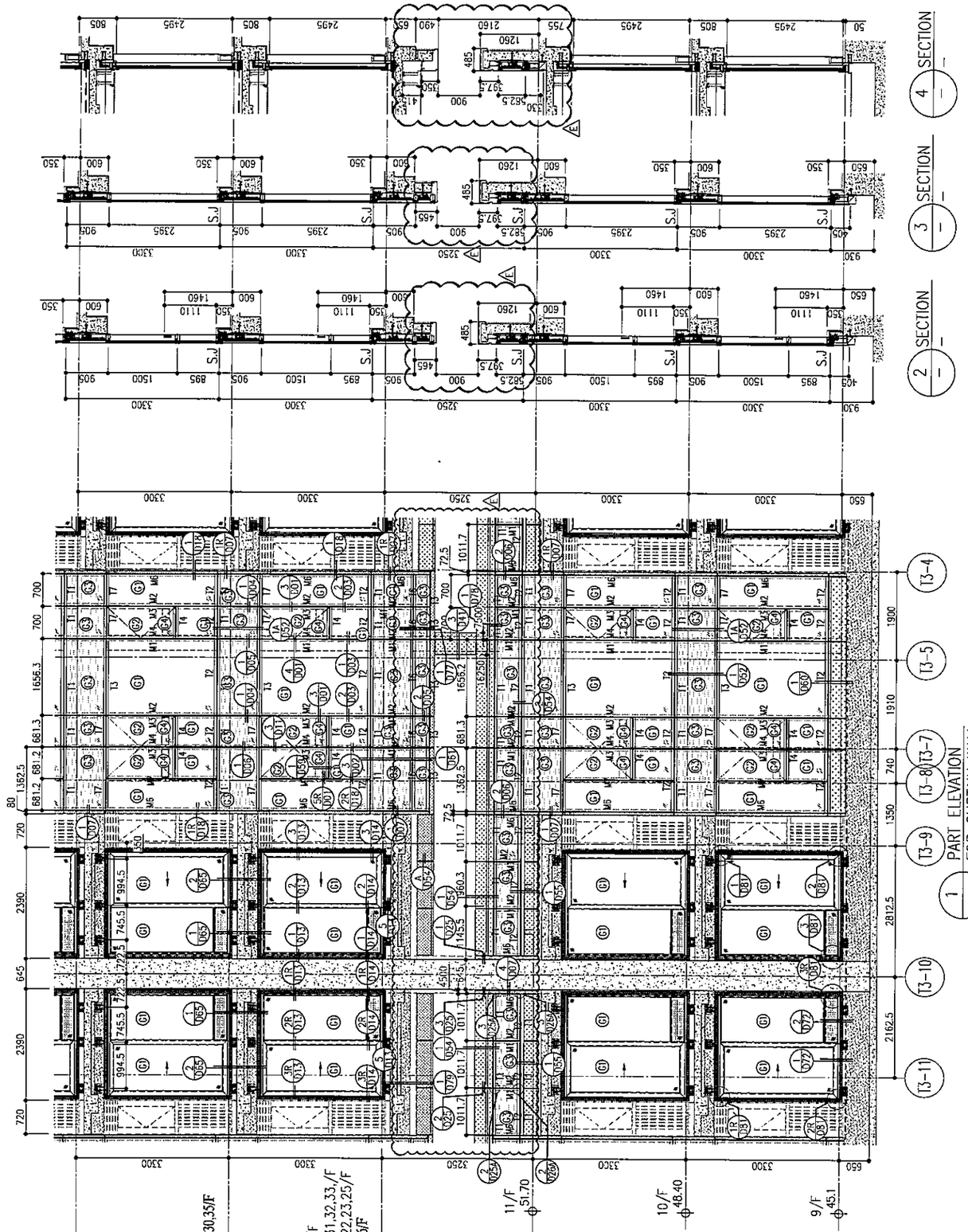

R/F	+217.00
67/F	+213.50
66/F	+210.00
65/F	+206.70
63/F	+203.40
62/F	+200.10
61/F	+196.80
60/F	+193.50
59/F	+190.20
58/F	+186.90
57/F	+183.60
56/F	+180.30
55/F	+177.00
53/F	+173.70

52/F	+170.40	
51/F	+167.10	
50/F	+163.80	
49/F	+160.50	
48/F	+157.20	
47/F	+153.90	
46/F	+150.60	
45/F	+147.30	
43/F	+144.00	
42/F	+140.70	
41/F	+137.40	
40/F	+134.15	

39/F	+130.85	107.75	
38/F	+127.55		
37/F	+124.25		
36/F	+120.95		
35/F	+117.65		
33/F	+114.35		
32/F	+111.05		
31/F			
30/F	+104.45		
29/F	+101.15		
28/F	+97.85		
27/F	+94.55		

26/F	+91.25		
25/F	+87.95		
23/F	+84.65		
22/F	+81.35		
21/F	+78.05		
20/F	+74.75		
19/F	+71.45		
18/F	+68.15		
17/F	+64.85		
16/F	+61.55		
15/F	+58.25		
12/F	+54.95		

LEGEND:

- G1 – 10mm THK. HEAT STRENGTHENED GLASS (OUTSIDE) + 12mm AIR SPACE + 12mm THK. TEMPERED GLASS
- G2 – 10mm THK. HEAT STRENGTHENED GLASS (OUTSIDE) + 12mm AIR SPACE + 10mm THK. TEMPERED GLASS
- G3 – 12mm THK. HEAT STRENGTHENED GLASS
- G4 – 12mm THK. CLEAR TEMPERED GLASS (INTERNAL PROTECTIVE BARRIER)
- G5 – 10mm ~~PRINTED~~ DELETED HEAT STRENGTHENED GLASS
- G6 – 10mm ~~PRINTED~~ DELETED CLEAR TEMPERED GLASS
- G7 – 8mm THK. CLEAR HEAT-STRENGTHENED GLASS + 2mm PVB + 8mm THK. CLEAR HEAT STRENGTHENED GLASS
- AL – 3 mm THK. ALUM. CLADDING
- AL – 3 mm THK. ALUM. BACKPAN
- S.J. – STACK JOINT

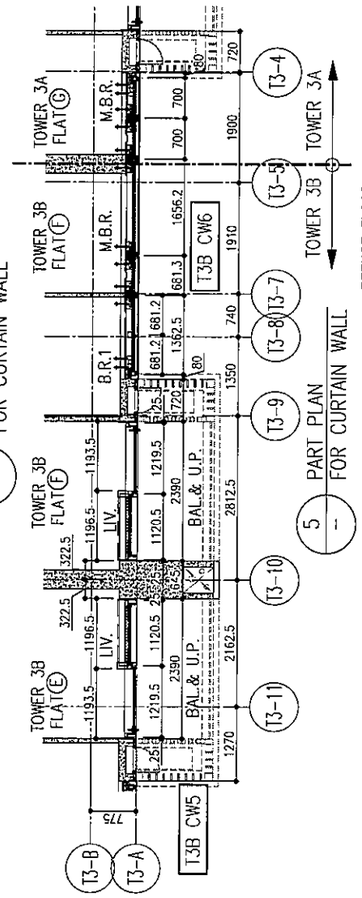

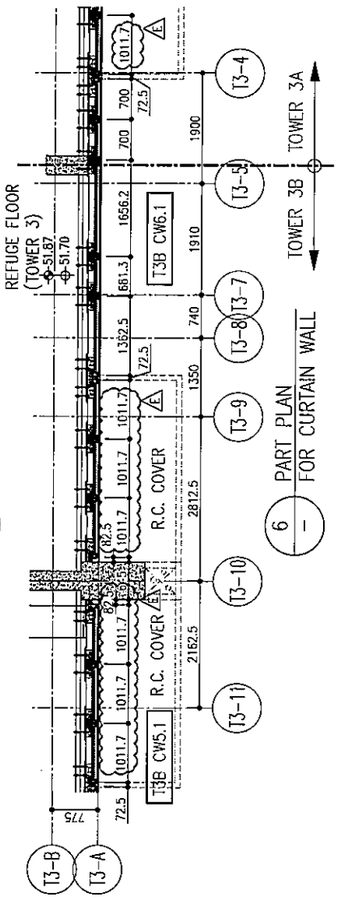

B.D. REF :

CLIENT :
信和置業有限公司
Sino Land Company Limited

ARCHITECT :
ronald lu & partners
Architects · Planners · Interior Designers
Ronald Lu & Partners (HK) Ltd.
呂元祥建築師事務所(香港)有限公司

MAIN CONTRACTOR :
Gammon

STRUCTURAL ENGINEER :
AECOM

FACADE CONSULTANT:
AECOM

NOTE :
1. ALL DIMENSIONS ARE IN mm.
2. ALL ELEVATIONS ARE VIEWED FROM OUTSIDE.
3. ALL DIMENSIONS TO BE VERIFIED ON SITE BEFORE FABRICATION.

LEGEND :
- X1 / XD01 – DETAIL MARK NO. / REFER SHEET NO.
1. F.F.L. --FINISHED FLOOR LEVEL
2. S.F.L. --STRUCTURAL FLOOR LEVEL
3. /R --REVERSED DETAIL

NO.	DATE	REVISED	BY
E	25/05/22	REVISED AS PER COMMENTS	LS
D	22/04/06	REVISED AS PER COMMENTS	LS
C	22/01/22	REVISED AS PER COMMENTS	LS
B	20/12/21	REVISED AS PER COMMENTS	LS
A	03/12/21	REVISED AS PER COMMENTS	LS

JOB NO. : J-858

PROJECT :
PROPOSED RESIDENTIAL DEVELOPMENT
AT TKOTL 70RP, PHASE 11, LOHAS PARK
TSEUNG KWAN O, N.T.

TITLE :
TYPICAL FLOOR PARTIAL ELEVATION & SECTION, PLAN FOR CURTAIN WALL (TOWER 3)

DATE : 22-OCT-21 | SCALE : 1:50(A1)

DRAWN BY : | CHECKED BY :

美特鋁質有限公司
MIDI ALUMINIUM FABRICATOR LTD.
Units 6-8, Sunray Industrial Centre, 1/F
610 Cha Kwo Ling Road, Kowloon
Tel:23469211-4 Fax:(852)27727666

DWG NO. : J858-CW-PE308 | REV. : E

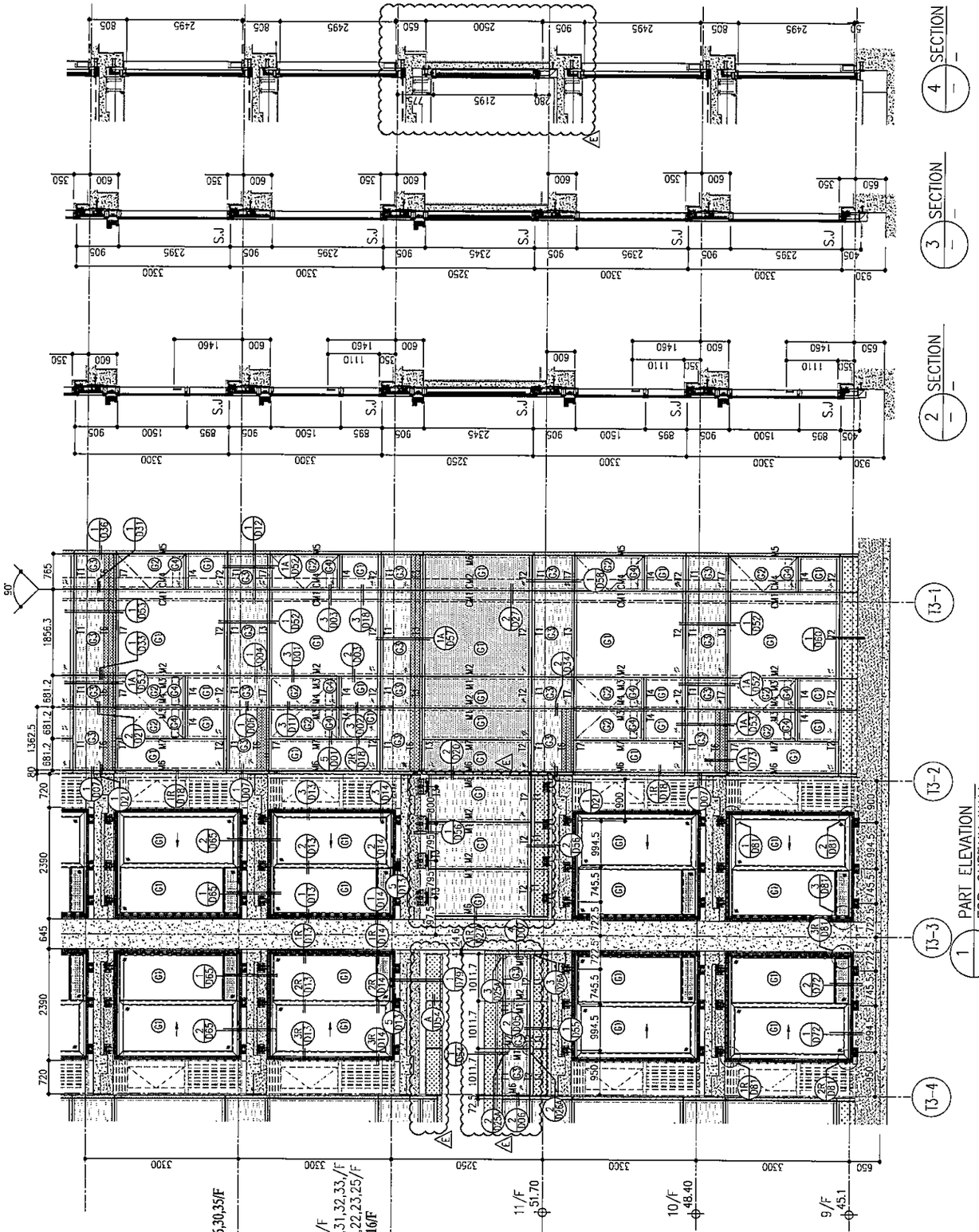

R/F	+217.00
67/F	+213.50
66/F	+210.00
65/F	+206.70
63/F	+203.40
62/F	+200.10
61/F	+196.80
60/F	+193.50
59/F	+190.20
58/F	+186.90
57/F	+183.60
56/F	+180.30
55/F	+177.00
53/F	+173.70

52/F	+170.40	
51/F	+167.10	
50/F	+163.80	
49/F	+160.50	
48/F	+157.20	
47/F	+153.90	
46/F	+150.60	
45/F	+147.30	
43/F	+144.00	
42/F	+140.70	
41/F	+137.40	
40/F	+134.15	

39/F	+130.85	
38/F	+127.55	
37/F	+124.25	
36/F	+120.95	
35/F	+117.65	
33/F	+114.35	
32/F	+111.05	
31/F	107.75	
30/F	+104.45	
29/F	+101.15	
28/F	+97.85	
27/F	+94.55	

26/F	+91.25	
25/F	+87.95	
23/F	+84.65	
22/F	+81.35	
21/F	+78.05	
20/F	+74.75	
19/F	+71.45	
18/F	+68.15	
17/F	+64.85	
16/F	+61.55	
15/F	+58.25	
12/F	+54.95	

LEGEND:

- (G1) – 10mm THK. HEAT STRENGTHENED GLASS (OUTSIDE) +12mm AIR SPACE + 12mm THK. TEMPERED GLASS
- (G2) – 10mm THK. HEAT STRENGTHENED GLASS (OUTSIDE) +12mm AIR SPACE + 10mm THK. TEMPERED GLASS
- (G3) – 12mm THK. HEAT STRENGTHENED GLASS
- (G4) – 12mm THK. CLEAR TEMPERED GLASS (INTERNAL PROTECTIVE BARRIER)
- (G5) – 10mm ~~BLEETED~~ DELETED HEAT STRENGTHENED GLASS
- (G6) – 10mm ~~TLEETED~~ DELETED CLEAR TEMPERED GLASS
- (G7) – 8mm THK. CLEAR HEAT-STRENGTHENED GLASS +2mm PVB + 8mm THK. CLEAR HEAT STRENGTHENED GLASS
- – 3 mm THK. ALUM. CLADDING
- – 3 mm THK. ALUM. BACKPAN
- S.J. – STACK JOINT

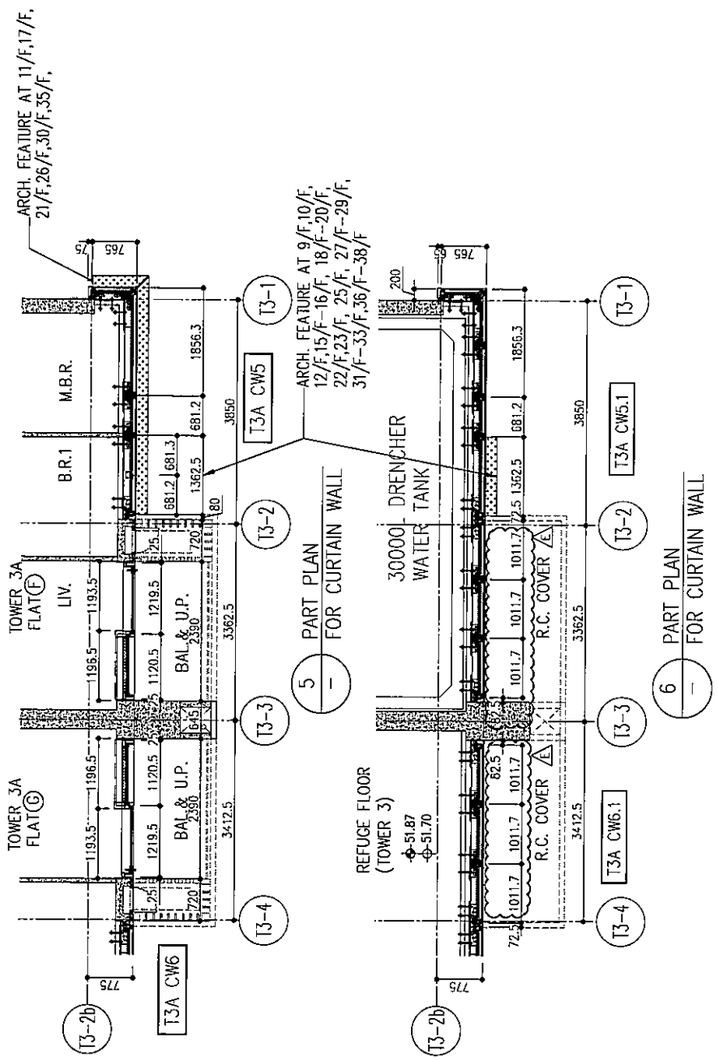

B.D. REF :

CLIENT :
信和置業有限公司
Sino Land Company Limited

ARCHITECT :
ronald lu & partners
Architects . Planners . Interior Designers
Ronald Lu & Partners (HK) Ltd.
呂元祥建築師事務所(香港)有限公司

MAIN CONTRACTOR :
Gammon

STRUCTURAL ENGINEER :
AECOM

FACADE CONSULTANT:
AECOM

NOTE :
1. ALL DIMENSIONS ARE IN mm.
2. ALL ELEVATIONS ARE VIEWED FROM OUTSIDE.
3. ALL DIMENSIONS TO BE VERIFIED ON SITE BEFORE FABRICATION.

LEGEND :
- (X1 / X001) — DETAIL MARK NO. / REFER SHEET NO.
1. F.F.L. --FINISHED FLOOR LEVEL
2. S.F.L. --STRUCTURAL FLOOR LEVEL
3. (R) --REVERSED DETAIL

NO.	DATE	REVISED	BY
E	25/05/22	REVISED AS PER COMMENTS	LS
D	22/04/06	REVISED AS PER COMMENTS	LS
C	22/01/22	REVISED AS PER COMMENTS	LS
B	20/12/21	REVISED AS PER COMMENTS	LS
A	03/12/21	REVISED AS PER COMMENTS	LS

JOB NO. : J-858

PROJECT :
PROPOSED RESIDENTIAL DEVELOPMENT
AT TKOTL 70RP, PHASE 11, LOHAS PARK
TSEUNG KWAN O, N.T.

TITLE :
TYPICAL FLOOR PARTIAL ELEVATION & SECTION, PLAN FOR CURTAIN WALL (TOWER 3)

DATE : 22-OCT-21 | SCALE : 1:50(A1)

DRAWN BY : | CHECKED BY :

美特鋁質有限公司
MIDI ALUMINIUM FABRICATOR LTD.
Units 6-8, Sunray Industrial Centre, 1/F
610 Cha Kwo Ling Road, Kowloon
Tel:23489211-4 Fax:(852)27727666

DWG NO. : J858-CW-PE309 | REV. : E

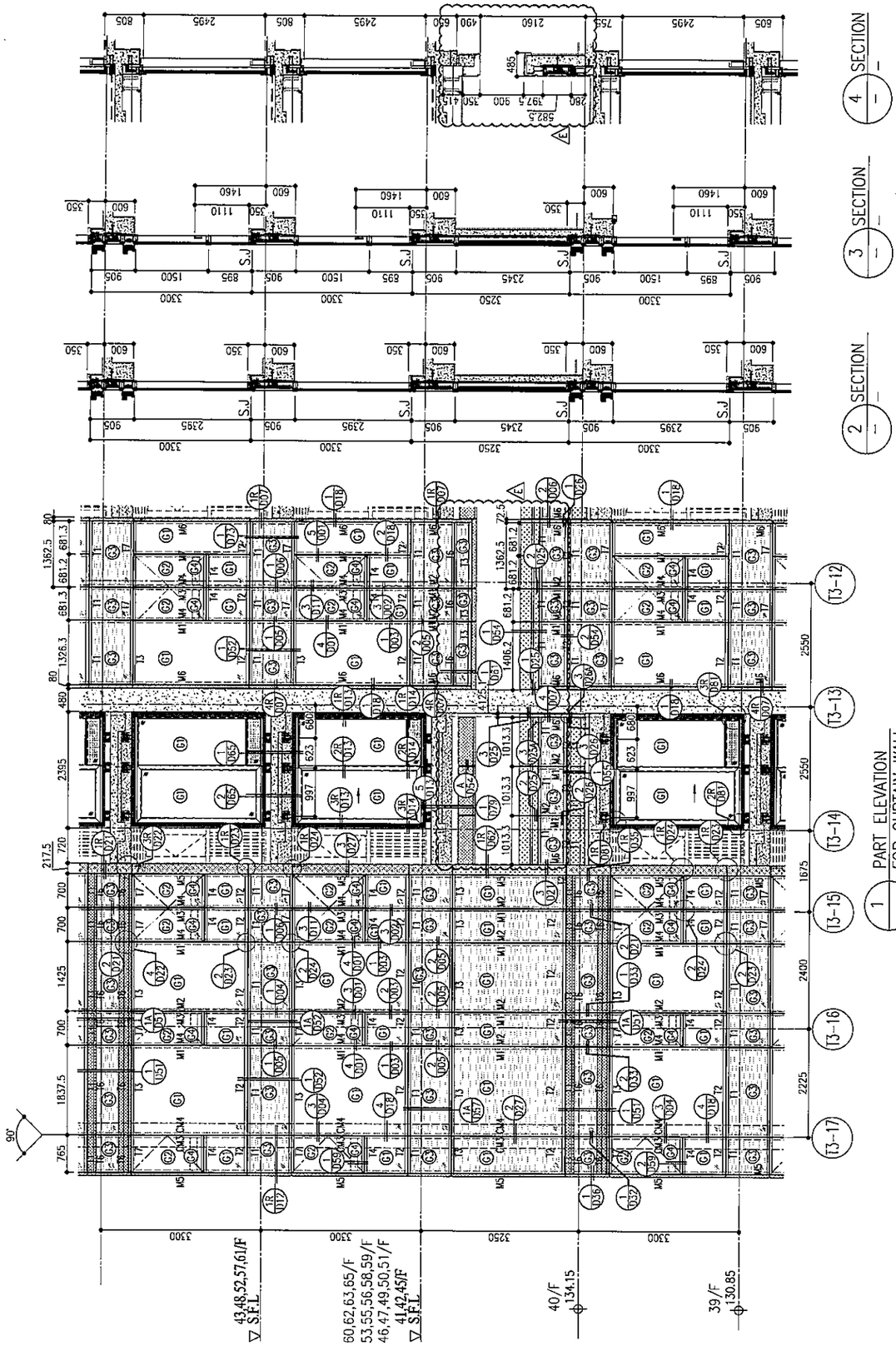

1 PART ELEVATION FOR CURTAIN WALL

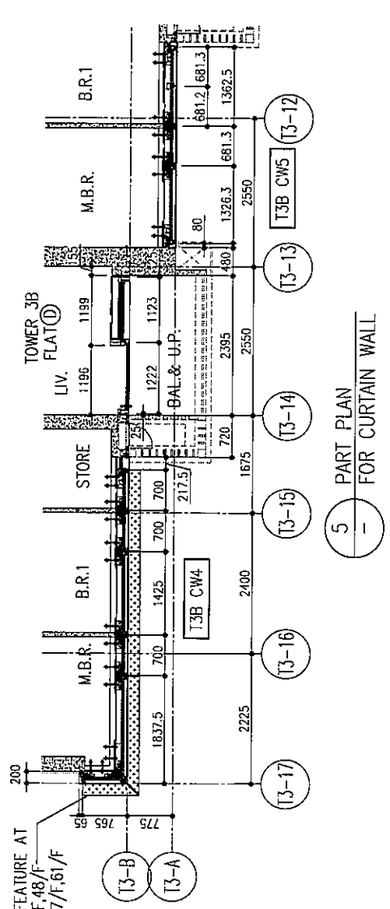

5 PART PLAN FOR CURTAIN WALL

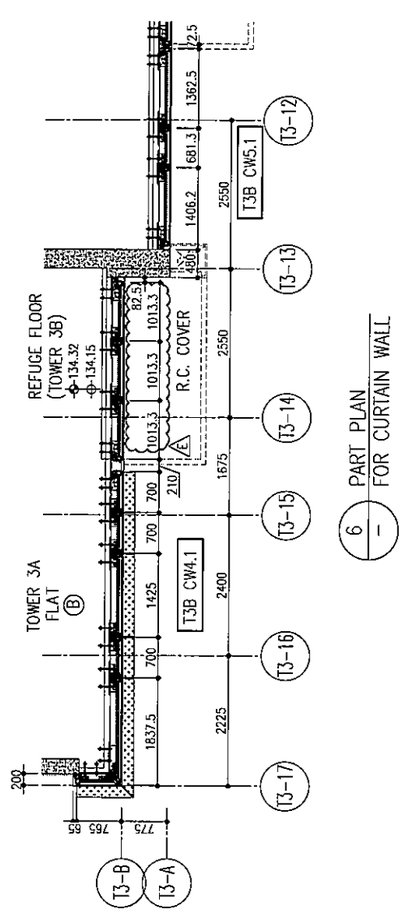

6 PART PLAN FOR CURTAIN WALL

| | | |

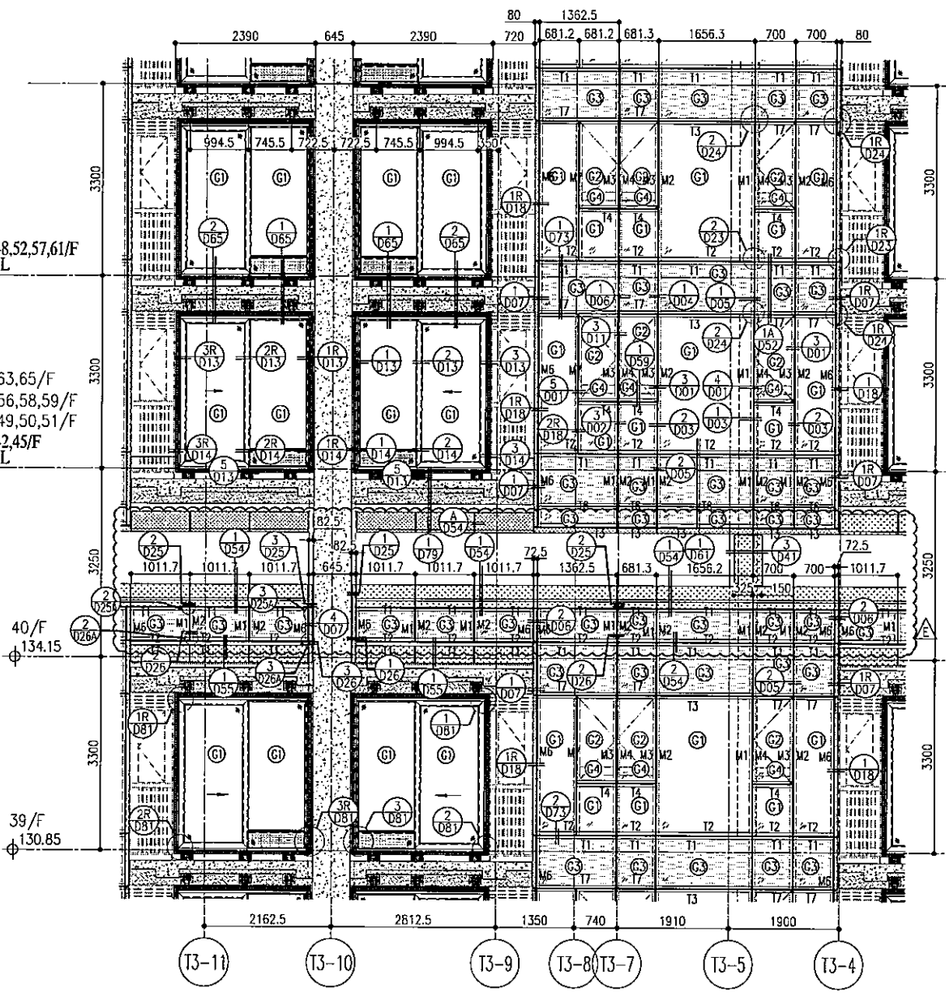

1 PART ELEVATION FOR CURTAIN WALL

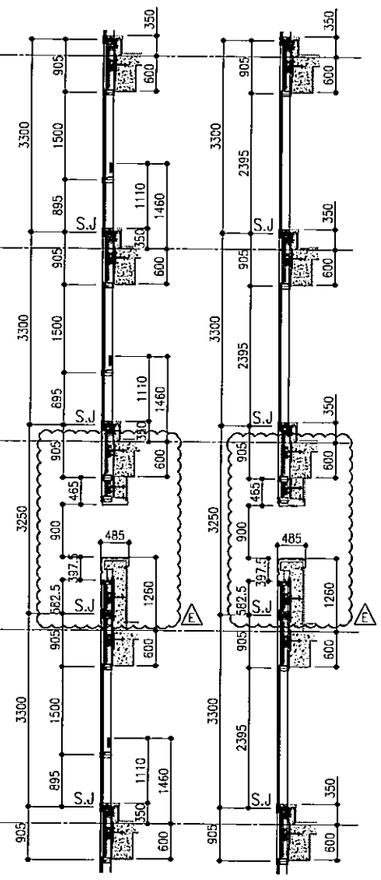

2 SECTION

3 SECTION

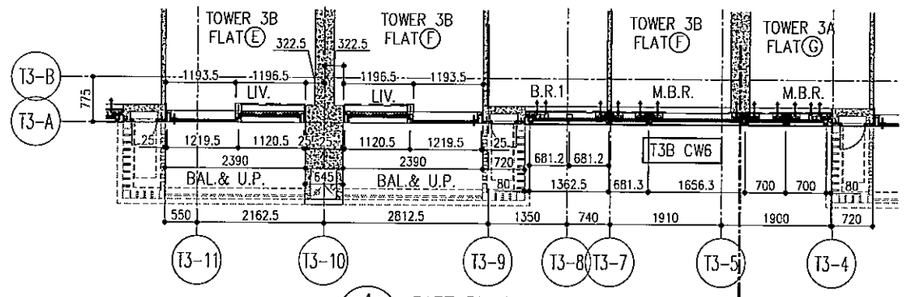

4 PART PLAN FOR CURTAIN WALL — TOWER 3B | TOWER 3A

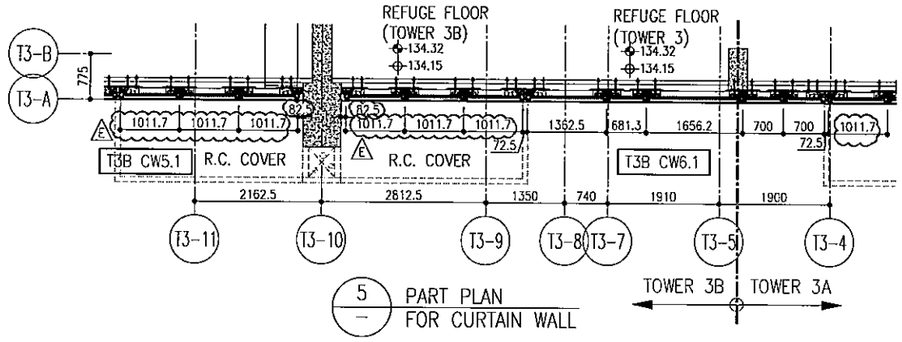

5 PART PLAN FOR CURTAIN WALL — TOWER 3B | TOWER 3A

						R/F	+217.00
						67/F	+213.50
26/F	+91.25	39/F	+130.85	52/F	+170.40	66/F	+210.00
25/F	+87.95	38/F	+127.55	51/F	+167.10	65/F	+206.70
23/F	+84.65	37/F	+124.25	50/F	+163.80	63/F	+203.40
22/F	+81.35	36/F	+120.95	49/F	+160.50	62/F	+200.10
21/F	+78.05	35/F	+117.65	48/F	+157.20	61/F	+196.80
20/F	+74.75	33/F	+114.35	47/F	+153.90	60/F	+193.50
19/F	+71.45	32/F	+111.05	46/F	+150.60	59/F	+190.20
18/F	+68.15	31/F	107.75	45/F	+147.30	58/F	+186.90
17/F	+64.85	30/F	+104.45	43/F	+144.00	57/F	+183.60
16/F	+61.55	29/F	+101.15	42/F	+140.70	56/F	+180.30
15/F	+58.25	28/F	+97.85	41/F	+137.40	55/F	+177.00
12/F	+54.95	27/F	+94.55	40/F	+134.15	53/F	+173.70

LEGEND:

- G1 — 10mm THK. HEAT STRENGTHENED GLASS (OUTSIDE) +12mm AIR SPACE + 12mm THK. TEMPERED GLASS
- G2 — 10mm THK. HEAT STRENGTHENED GLASS (OUTSIDE) +12mm AIR SPACE + 10mm THK. TEMPERED GLASS
- G3 — 12mm THK. HEAT STRENGTHENED GLASS
- G4 — 12mm THK. CLEAR TEMPERED GLASS (INTERNAL PROTECTIVE BARRIER)
- G5 — 10mm BLUE TINTED HEAT STRENGTHENED GLASS DELETED
- G6 — 10mm THK. CLEAR TEMPERED GLASS DELETED
- G7 — 8mm THK. CLEAR HEAT-STRENGTHENED GLASS +2mm PVB + 8mm THK. CLEAR HEAT STRENGTHENED GLASS DELETED
- 3 mm THK. ALUM. CLADDING
- 3 mm THK. ALUM. BACKPAN
- S.J. — STACK JOINT

NO.	DATE	REVISED
E	25/05/22	REVISED AS PER COMMENTS
D	22/04/06	REVISED AS PER COMMENTS
C	22/01/22	REVISED AS PER COMMENTS
B	20/12/21	REVISED AS PER COMMENTS
A	03/12/21	REVISED AS PER COMMENTS

BY: LS LS LS LS LS

JOB NO. : J-858

PROJECT : PROPOSED RESIDENTIAL DEVELOPMENT AT TKOTL 70RP, PHASE 11, LOHAS PARK TSEUNG KWAN O, N.T.

TITLE : TYPICAL FLOOR PARTIAL ELEVATION & SECTION, PLAN FOR CURTAIN WALL (TOWER 3)

DATE : 22-OCT-21 | SCALE : 1:50(A1)

DRAWN BY : | CHECKED BY :

DWG NO. : 858-CW-PE311 | REV. : E

NOTE :
1. ALL DIMENSIONS ARE IN mm.
2. ALL ELEVATIONS ARE VIEWED FROM OUTSIDE.
3. ALL DIMENSIONS TO BE VERIFIED ON SITE BEFORE FABRICATION.

LEGEND :
- X1 / XSD1 — DETAIL MARK NO. / REFER SHEET NO.
1. F.F.L. --FINISHED FLOOR LEVEL
2. S.F.L. --STRUCTURAL FLOOR LEVEL
3. (R) --REVERSED DETAIL

FACADE CONSULTANT: AECOM

STRUCTURAL ENGINEER : AECOM

MAIN CONTRACTOR : Gammon

ARCHITECT : ronald lu & partners / Ronald Lu & Partners (HK) Ltd. 呂元祥建築師事務所(香港)有限公司

CLIENT : 信和置業有限公司 Sino Land Company Limited

B.D. REF :

美特鋁質有限公司 MIDI ALUMINIUM FABRICATOR LTD.
Units 6-8, Sunray Industrial Centre, 1/F
610 Cha Kwo Ling Road, Kowloon
Tel:23489211-4 Fax:(852)27727666

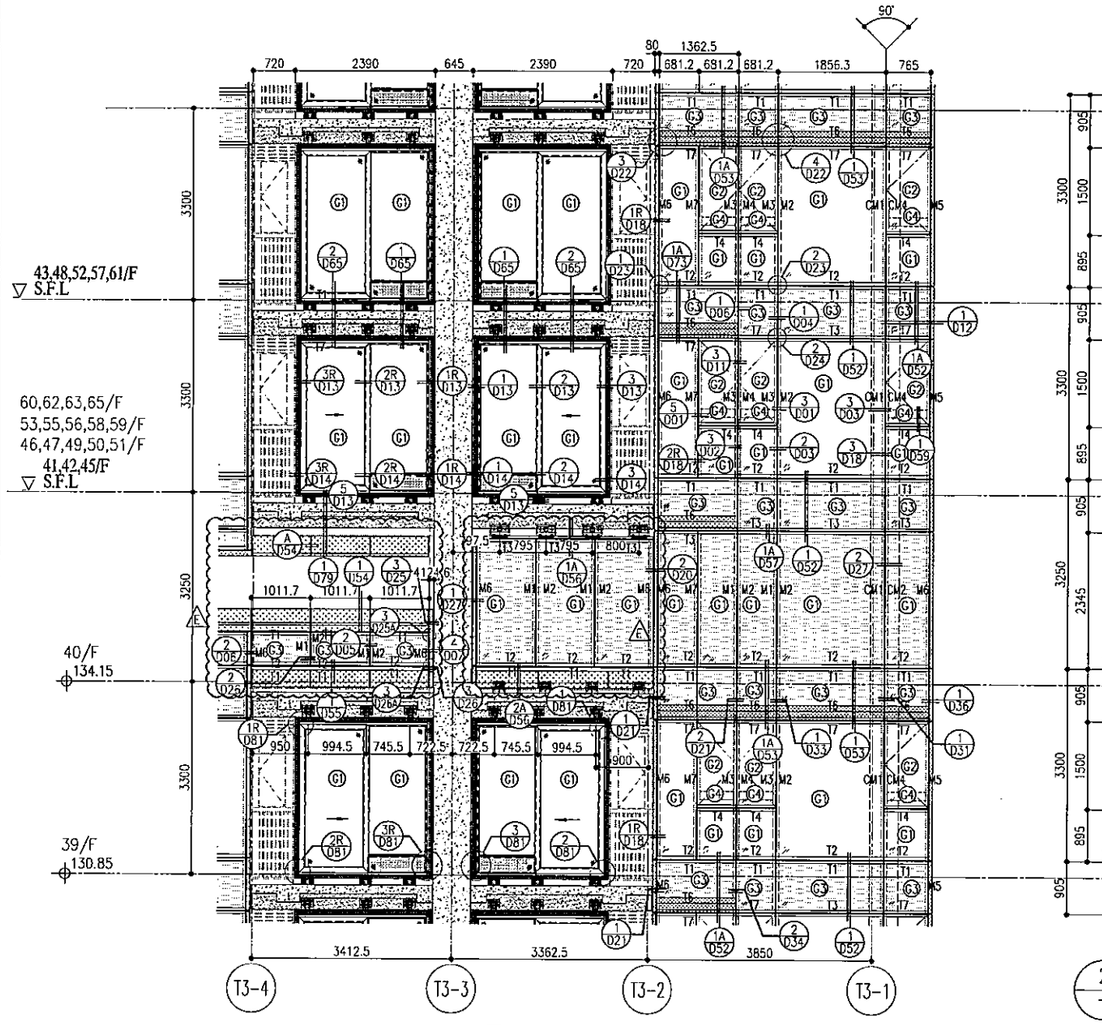

1 PART ELEVATION FOR CURTAIN WALL

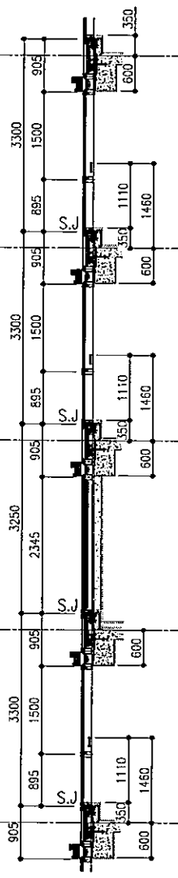

2 SECTION

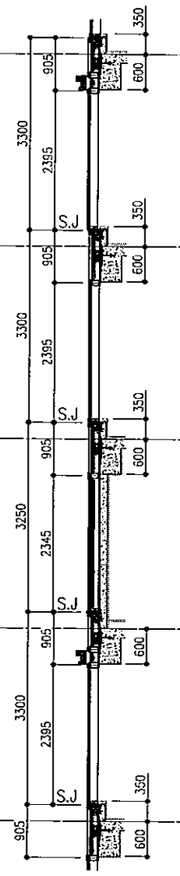

3 SECTION

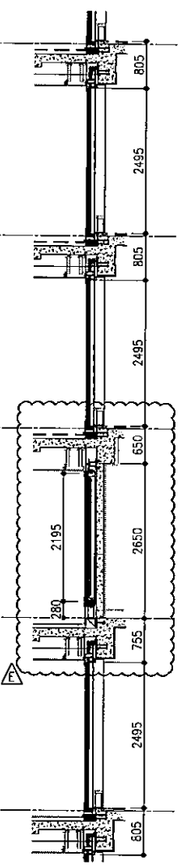

4 SECTION

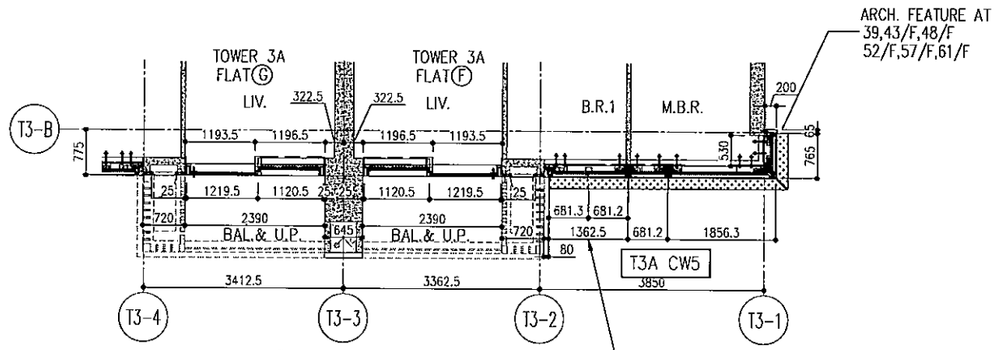

5 PART PLAN FOR CURTAIN WALL

ARCH. FEATURE AT 40/F-42/F,
45/F-47/F,49/F-51/F, 53/F-56/F
58/F-60/F,62/F-65/F

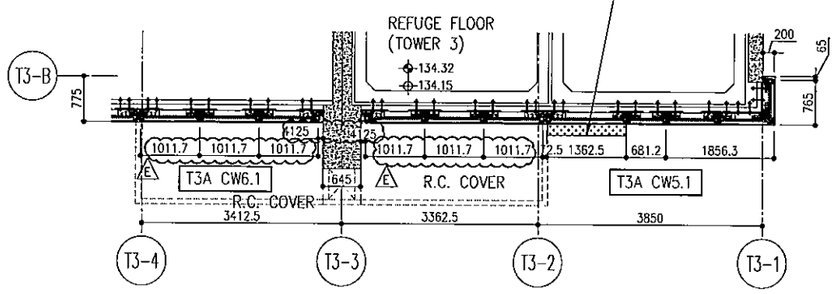

6 PART PLAN FOR CURTAIN WALL

						R/F	+217.00
						67/F	+213.50
26/F	+91.25	39/F	+130.85	52/F	+170.40	66/F	+210.00
25/F	+87.95	38/F	+127.55	51/F	+167.10	65/F	+206.70
23/F	+84.65	37/F	+124.25	50/F	+163.80	63/F	+203.40
22/F	+81.35	36/F	+120.95	49/F	+160.50	62/F	+200.10
21/F	+78.05	35/F	+117.65	48/F	+157.20	61/F	+196.80
20/F	+74.75	33/F	+114.35	47/F	+153.90	60/F	+193.50
19/F	+71.45	32/F	+111.05	46/F	+150.60	59/F	+190.20
18/F	+68.15	31/F	107.75	45/F	+147.30	58/F	+186.90
17/F	+64.85	30/F	+104.45	43/F	+144.00	57/F	+183.60
16/F	+61.55	29/F	+101.15	42/F	+140.70	56/F	+180.30
15/F	+58.25	28/F	+97.85	41/F	+137.40	55/F	+177.00
12/F	+54.95	27/F	+94.55	40/F	+134.15	53/F	+173.70

LEGEND:

- G1 — 10mm THK. HEAT STRENGTHENED GLASS (OUTSIDE) +12mm AIR SPACE + 12mm THK. TEMPERED GLASS
- G2 — 10mm THK. HEAT STRENGTHENED GLASS (OUTSIDE) +12mm AIR SPACE + 10mm THK. TEMPERED GLASS
- G3 — 12mm THK. HEAT STRENGTHENED GLASS
- G4 — 12mm THK. CLEAR TEMPERED GLASS (INTERNAL PROTECTIVE BARRIER)
- G5 — 10mm BLUE TINTED HEAT STRENGTHENED GLASS DELETED
- G6 — 10mm THK. CLEAR TEMPERED GLASS DELETED
- G7 — 8mm THK. CLEAR HEAT-STRENGTHENED GLASS + 2mm PVB + 8mm THK. CLEAR HEAT STRENGTHENED GLASS DELETED
- 3 mm THK. ALUM. CLADDING
- 3 mm THK. ALUM. BACKPAN
- S.J. — STACK JOINT

NOTE:
1. ALL DIMENSIONS ARE IN mm.
2. ALL ELEVATIONS ARE VERIFIED FROM OUTSIDE.
3. ALL DIMENSIONS TO BE VERIFIED ON SITE BEFORE FABRICATION.

LEGEND:
- X1 / X001 — DETAIL MARK NO. / REFER SHEET NO.
- F.F.L. — FINISHED FLOOR LEVEL
- S.F.L. — STRUCTURAL FLOOR LEVEL
- (R) — REVERSED DETAIL

NO.	DATE	REVISED	BY
E	25/05/22	REVISED AS PER COMMENTS	LS
D	22/04/08	REVISED AS PER COMMENTS	LS
C	22/01/22	REVISED AS PER COMMENTS	LS
B	20/12/21	REVISED AS PER COMMENTS	LS
A	03/12/21	REVISED AS PER COMMENTS	LS

JOB NO. : J-858

PROJECT : PROPOSED RESIDENTIAL DEVELOPMENT AT TKOTL 70RP, PHASE 11, LOHAS PARK TSEUNG KWAN O, N.T.

TITLE : TYPICAL FLOOR PARTIAL ELEVATION & SECTION, PLAN FOR CURTAIN WALL (TOWER 3)

DATE : 22-OCT-21 | SCALE : 1:50(A1)

DRAWN BY : | CHECKED BY :

DWG NO. : J858-CW-PE312 | REV. : E

美特鋁廠有限公司 MIDI ALUMINIUM FABRICATOR LTD.
Units 6-8, Sunray Industrial Centre, 1/F
510 Chu Kwo Ling Road, Kowloon
Tel:23469211-4 Fax:(852)27727666

FACADE CONSULTANT: AECOM

STRUCTURAL ENGINEER: AECOM

MAIN CONTRACTOR: Gammon

ARCHITECT: ronald lu & partners (Hong Kong) Ronald Lu & Partners (HK) Ltd. 呂元祥建築師事務所(香港)有限公司

CLIENT: 信和置業有限公司 Sino Land Company Limited

B.D. REF. :

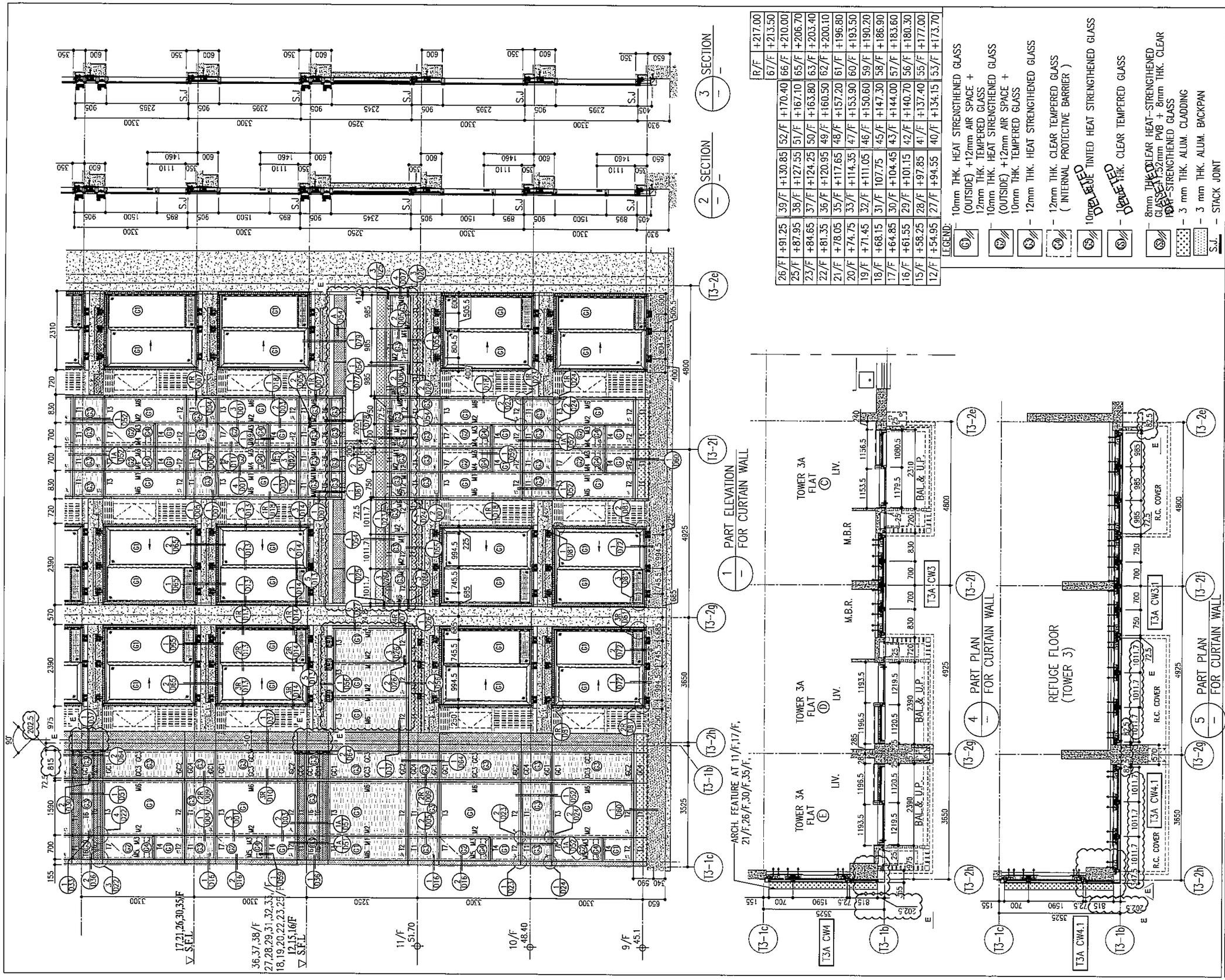

B.D. REF :

CLIENT :
信和置業有限公司
Sino Land Company Limited

ARCHITECT :
ronald lu & partners
Architects , Planners , Interior Designers
Ronald Lu & Partners (HK) Ltd.
呂元祥建築師事務所(香港)有限公司

MAIN CONTRACTOR :
Gammon

STRUCTURAL ENGINEER :
AECOM

FACADE CONSULTANT:
AECOM

NOTE :
1. ALL DIMENSIONS ARE IN mm.
2. ALL ELEVATIONS ARE VIEWED FROM OUTSIDE.
3. ALL DIMENSIONS TO BE VERIFIED ON SITE BEFORE FABRICATION.

LEGEND :
X1 / XOO1 — DETAIL MARK NO. / REFER SHEET NO.
1. F.F.L. —FINISHED FLOOR LEVEL
2. S.F.L. —STRUCTURAL FLOOR LEVEL
3. (R) —REVERSED DETAIL

NO.	DATE	REVISED	BY
E	25/05/22	REVISED AS PER COMMENTS	LS
D	22/04/06	REVISED AS PER COMMENTS	LS
C	22/01/22	REVISED AS PER COMMENTS	LS
B	20/12/21	REVISED AS PER COMMENTS	LS
A	03/12/21	REVISED AS PER COMMENTS	LS

JOB NO. : J-858

PROJECT :
PROPOSED RESIDENTIAL DEVELOPMENT AT TKOTL 70RP, PHASE 11, LOHAS PARK TSEUNG KWAN O, N.T.

TITLE :
TYPICAL FLOOR PARTIAL ELEVATION & SECTION, PLAN FOR CURTAIN WALL (TOWER 3)

DATE : 22-OCT-21 | SCALE : 1:50(A1)

DRAWN BY : | CHECKED BY :

美特鋁質有限公司
MIDI ALUMINIUM FABRICATOR LTD.
Units 6-8, Sunray Industrial Centre, 1/F
610 Cha Kwo Ling Road, Kowloon
Tel:23489211-4 Fax:(852)27727666

DWG NO. : JB58-CW-PE313 | REV. : E

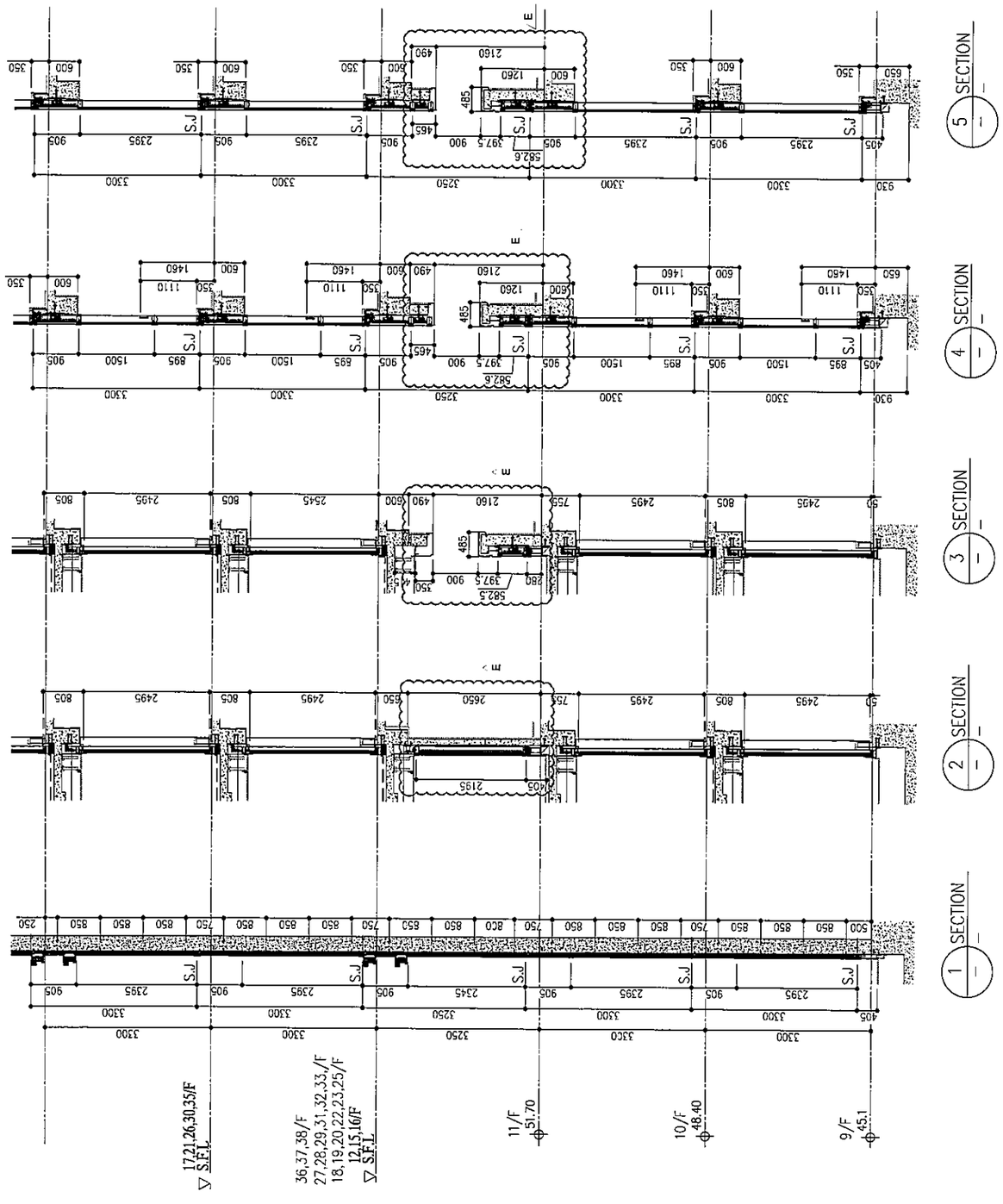

B.D. REF :

CLIENT :
信和置業有限公司
Sino Land Company Limited

ARCHITECT :
ronald lu & partners
Architects . Planners . Interior Designers
Ronald Lu & Partners (HK) Ltd.
呂元祥建築師事務所(香港)有限公司

MAIN CONTRACTOR :
Gammon

STRUCTURAL ENGINEER :
AECOM

FACADE CONSULTANT:
AECOM

NOTE :
1. ALL DIMENSIONS ARE IN mm.
2. ALL ELEVATIONS ARE VIEWED FROM OUTSIDE.
3. ALL DIMENSIONS TO BE VERIFIED ON SITE BEFORE FABRICATION.

LEGEND :
X1 — DETAIL MARK NO.
X001 — REFER SHEET NO.
1. F.F.L. --FINISHED FLOOR LEVEL
2. S.F.L. --STRUCTURAL FLOOR LEVEL
3. /R --REVERSED DETAIL

NO.	DATE	REVISED	BY
E	24/05/22	REVISED AS PER COMMENTS	LS
D	22/04/05	REVISED AS PER COMMENTS	LS
C	22/01/22	REVISED AS PER COMMENTS	LS
B	20/12/21	REVISED AS PER COMMENTS	LS
A	03/12/21	REVISED AS PER COMMENTS	LS

JOB NO. : J-858

PROJECT :
PROPOSED RESIDENTIAL DEVELOPMENT
AT TKOTL 70RP, PHASE 11, LOHAS PARK
TSEUNG KWAN O, N.T.

TITLE :
TYPICAL FLOOR PARTIAL
ELEVATION & SECTION, PLAN
FOR CURTAIN WALL (TOWER 3)

DATE : 22-OCT-21 | SCALE : 1:50(A1)

DRAWN BY : | CHECKED BY :

美特鋁質有限公司
MIDI ALUMINIUM FABRICATOR LTD.
Units 6-8, Sunray Industrial Centre, 1/F
610 Cha Kwo Ling Road, Kowloon
Tel:23489211-4 Fax:(852)27727566

DWG NO. : J858-CW-PE314 | REV. : E

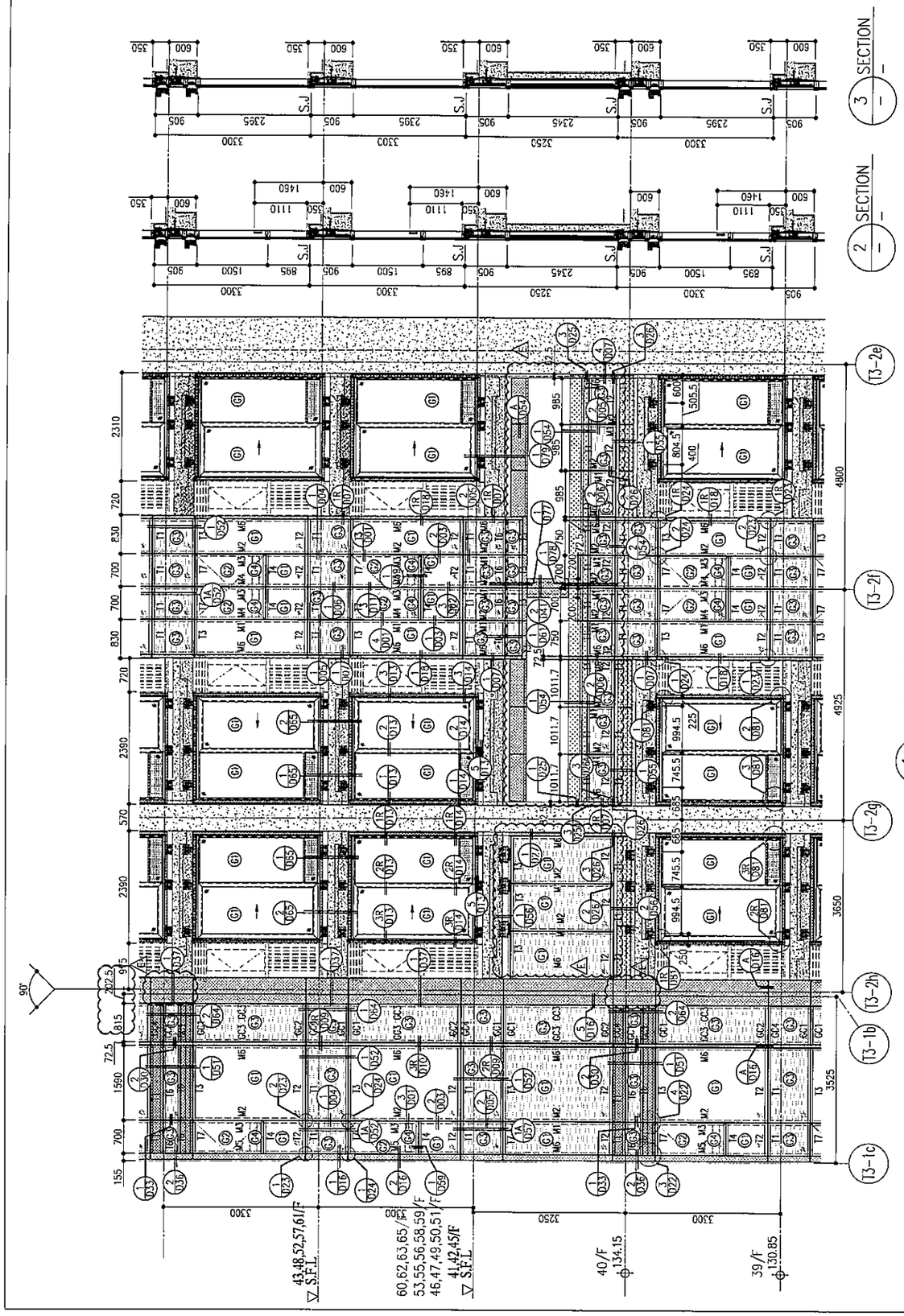

R/F	+217.00
67/F	+213.50
66/F	+210.00
65/F	+206.70
63/F	+203.40
62/F	+200.10
61/F	+196.80
60/F	+193.50
59/F	+190.20
58/F	+186.90
57/F	+183.60
56/F	+180.30
55/F	+177.00
53/F	+173.70

52/F	+170.40	66/F	+210.00
51/F	+167.10	65/F	+206.70
50/F	+163.80	63/F	+203.40
49/F	+160.50	62/F	+200.10
48/F	+157.20	61/F	+196.80
47/F	+153.90	60/F	+193.50
46/F	+150.60	59/F	+190.20
45/F	+147.30	58/F	+186.90
43/F	+144.00	57/F	+183.60
42/F	+140.70	56/F	+180.30
41/F	+137.40	55/F	+177.00
40/F	+134.15	53/F	+173.70

39/F	+130.85	52/F	+170.40
38/F	+127.55	51/F	+167.10
37/F	+124.25	50/F	+163.80
36/F	+120.95	49/F	+160.50
35/F	+117.65	48/F	+157.20
33/F	+114.35	47/F	+153.90
32/F	+111.05	46/F	+150.60
31/F	107.75	45/F	+147.30
30/F	+104.45	43/F	+144.00
29/F	+101.15	42/F	+140.70
28/F	+97.85	41/F	+137.40
27/F	+94.55	40/F	+134.15

26/F	+91.25	39/F	+130.85
25/F	+87.95	38/F	+127.55
23/F	+84.65	37/F	+124.25
22/F	+81.35	36/F	+120.95
21/F	+78.05	35/F	+117.65
20/F	+74.75	33/F	+114.35
19/F	+71.45	32/F	+111.05
18/F	+68.15	31/F	107.75
17/F	+64.85	30/F	+104.45
16/F	+61.55	29/F	+101.15
15/F	+58.25	28/F	+97.85
12/F	+54.95	27/F	+94.55

LEGEND:

- G1 — 10mm THK. HEAT STRENGTHENED GLASS (OUTSIDE) + 12mm AIR SPACE + 12mm THK. TEMPERED GLASS
- G2 — 10mm THK. HEAT STRENGTHENED GLASS (OUTSIDE) + 12mm AIR SPACE + 10mm THK. TEMPERED GLASS
- G3 — 12mm THK. HEAT STRENGTHENED GLASS
- G4 — 12mm THK. CLEAR TEMPERED GLASS (INTERNAL PROTECTIVE BARRIER)
- G5 — 10mm THK. TINTED HEAT STRENGTHENED GLASS (DEL. TED)
- G6 — 12mm THK. CLEAR TEMPERED GLASS (DEL. TED)
- G7 — 8mm THK. CLEAR HEAT-STRENGTHENED GLASS + 1.52mm PVB + 8mm THK. CLEAR HEAT-STRENGTHENED GLASS
- — 3 mm THK. ALUM. CLADDING
- — 3 mm THK. ALUM. BACKPAN
- S.J. — STACK JOINT

B.D. REF :

CLIENT :
信和置業有限公司
Sino Land Company Limited

ARCHITECT :
ronald lu & partners
Architects . Planners . Interior Designers
Ronald Lu & Partners (HK) Ltd.
呂元祥建築師事務所(香港)有限公司

MAIN CONTRACTOR :
Gammon

STRUCTURAL ENGINEER :
AECOM

FACADE CONSULTANT:
AECOM

NOTE :
1. ALL DIMENSIONS ARE IN mm.
2. ALL ELEVATIONS ARE VIEWED FROM OUTSIDE.
3. ALL DIMENSIONS TO BE VERIFIED ON SITE BEFORE FABRICATION.

LEGEND :
- X1 / XQ01 — DETAIL MARK NO. / REFER SHEET NO.
1. F.F.L. --FINISHED FLOOR LEVEL
2. S.F.L. --STRUCTURAL FLOOR LEVEL
3. (R) --REVERSED DETAIL

NO.	DATE	REVISED	BY
E	25/05/22	REVISED AS PER COMMENTS	LS
D	22/04/06	REVISED AS PER COMMENTS	LS
C	22/01/22	REVISED AS PER COMMENTS	LS
B	20/12/21	REVISED AS PER COMMENTS	LS
A	03/12/21	REVISED AS PER COMMENTS	LS

JOB NO. : J-858

PROJECT :
PROPOSED RESIDENTIAL DEVELOPMENT
AT TKOTL 70RP, PHASE 11, LOHAS PARK
TSEUNG KWAN O, N.T.

TITLE :
TYPICAL FLOOR PARTIAL
ELEVATION & SECTION, PLAN
FOR CURTAIN WALL (TOWER 3)

DATE : 22-OCT-21 | SCALE : 1:50(A1)

DRAWN BY : | CHECKED BY :

美特鋁質有限公司
MIDI ALUMINIUM FABRICATOR LTD.
Units 6-8, Sunray Industrial Centre, 1/F
610 Cha Kwo Ling Road, Kowloon
Tel:23469211~4 Fax:(852)27727666

DWG NO. : J858-CW-PE315 | REV. : E

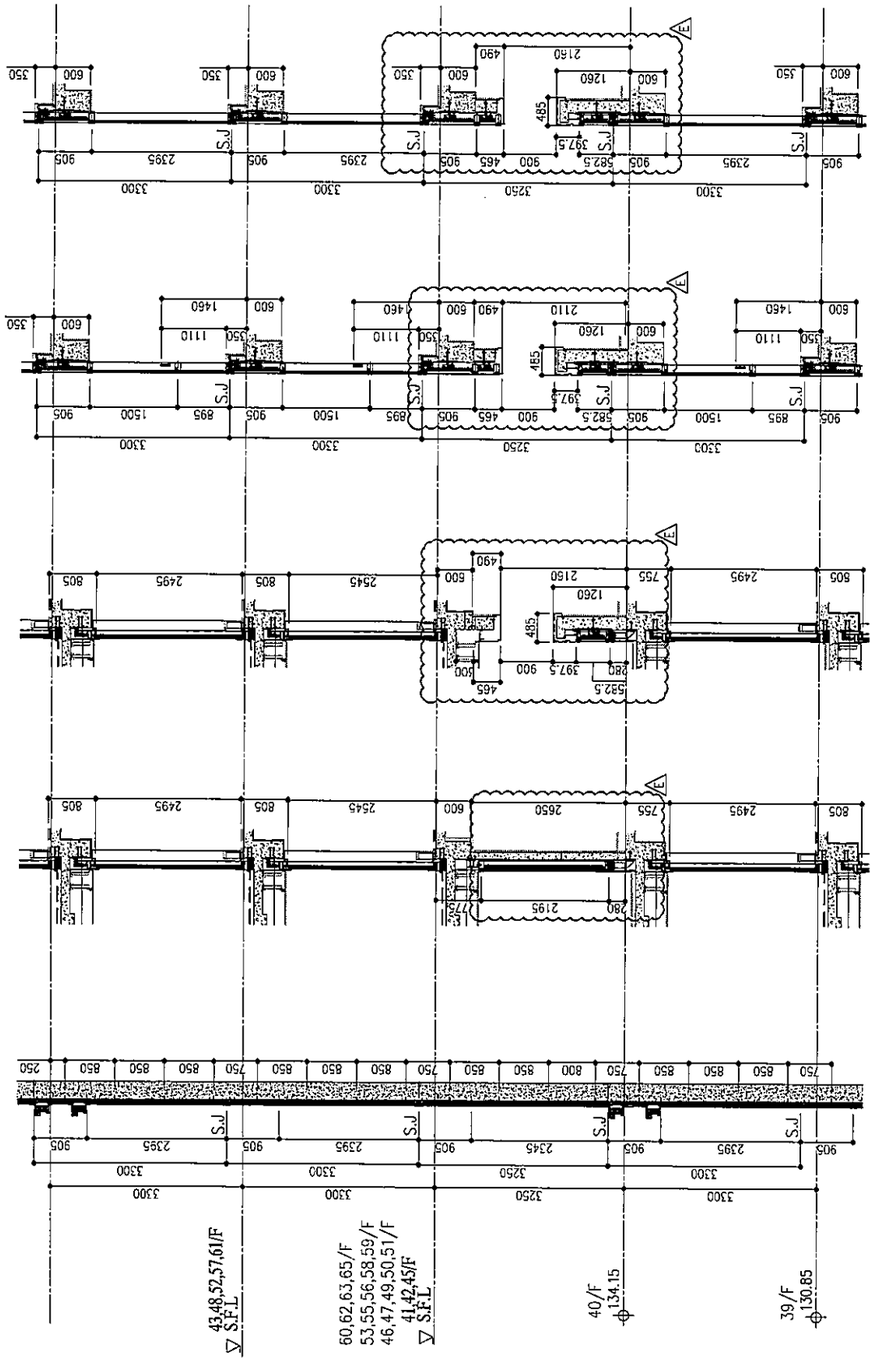

B.D. REF :

CLIENT :
信和置業有限公司
Sino Land Company Limited

ARCHITECT :
ronald lu & partners
Architects · Planners · Interior Designers
Ronald Lu & Partners (HK) Ltd.
呂元祥建築師事務所(香港)有限公司

MAIN CONTRACTOR :
Gammon

STRUCTURAL ENGINEER :
AECOM

FACADE CONSULTANT:
AECOM

NOTE :
1. ALL DIMENSIONS ARE IN mm.
2. ALL ELEVATIONS ARE VIEWED FROM OUTSIDE.
3. ALL DIMENSIONS TO BE VERIFIED ON SITE BEFORE FABRICATION.

LEGEND :
X1 / X001 — DETAIL MARK NO. / REFER SHEET NO.
1. F.F.L. --FINISHED FLOOR LEVEL
2. S.F.L. --STRUCTURAL FLOOR LEVEL
3. /R --REVERSED DETAIL

NO.	DATE	REVISED	BY
E	25/05/22	REVISED AS PER COMMENTS	LS
D	22/04/06	REVISED AS PER COMMENTS	LS
C	22/01/22	REVISED AS PER COMMENTS	LS
B	20/12/21	REVISED AS PER COMMENTS	LS
A	03/12/21	REVISED AS PER COMMENTS	LS

JOB NO. : J-858

PROJECT :
PROPOSED RESIDENTIAL DEVELOPMENT
AT TKOTL 70RP, PHASE 11, LOHAS PARK
TSEUNG KWAN O, N.T.

TITLE :
TYPICAL FLOOR PARTIAL
ELEVATION & SECTION, PLAN
FOR CURTAIN WALL (TOWER 3)

DATE : 22-OCT-21 | SCALE : 1:50(A1)

DRAWN BY : | CHECKED BY :

美特鋁質有限公司
MIDI ALUMINIUM FABRICATOR LTD.
Units 6-8, Sunray Industrial Centre, 1/F
610 Cha Kwo Ling Road, Kowloon
Tel:23469211-4 Fax:(852)27727666

DWG NO. : J858-CW-PE316 | REV. : E

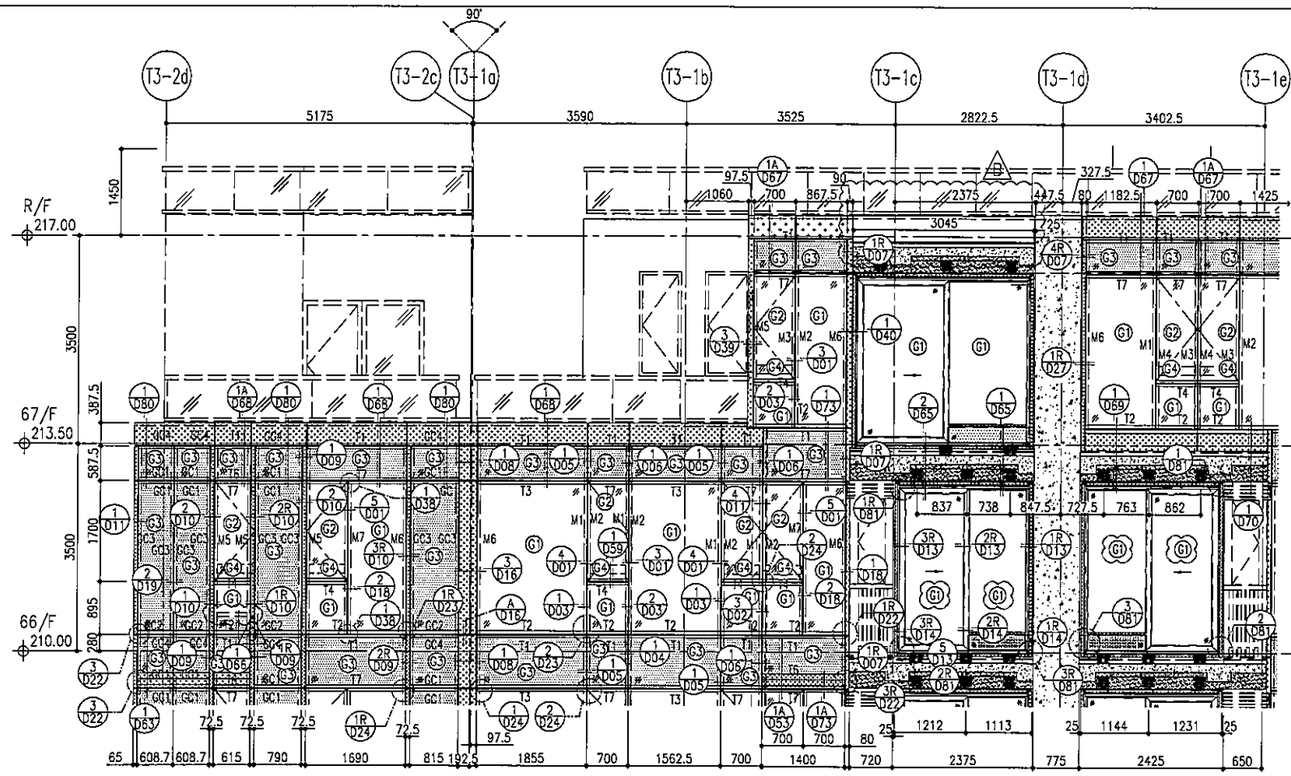

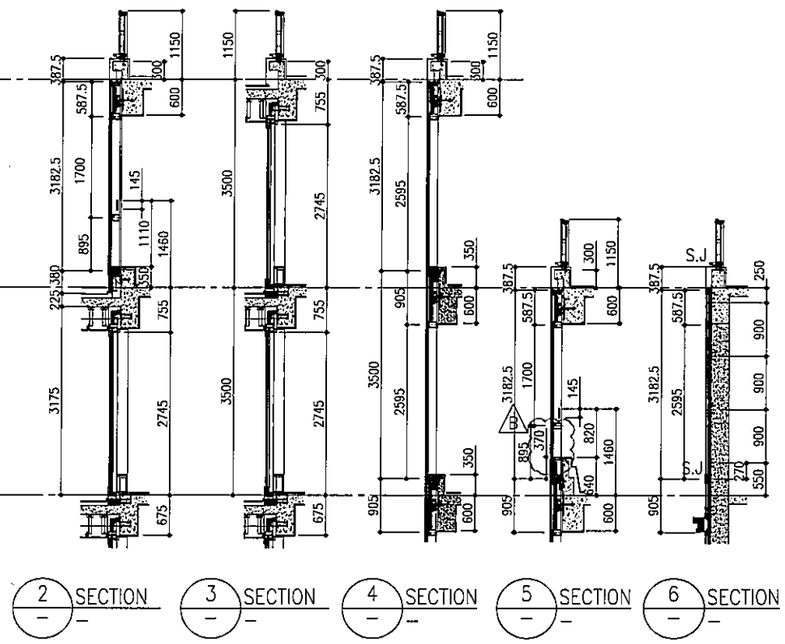

2 SECTION

3 SECTION

4 SECTION

5 SECTION

6 SECTION

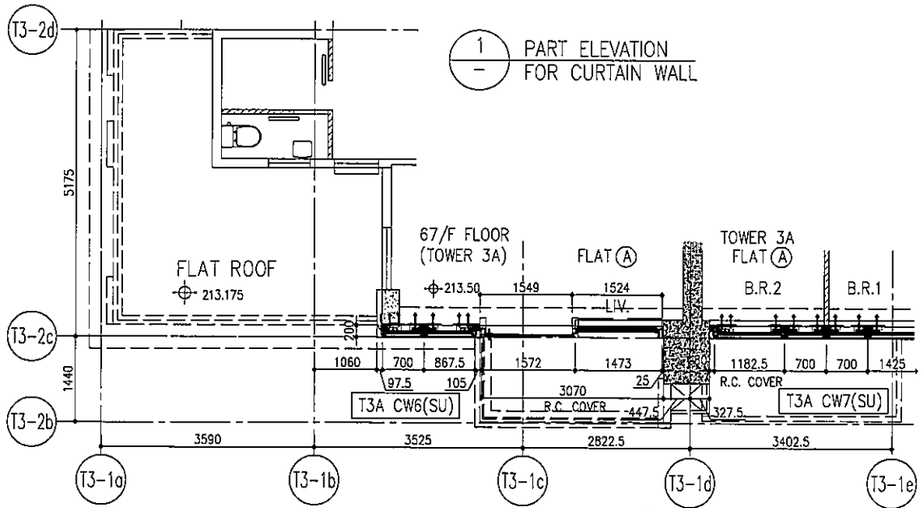

1 PART ELEVATION FOR CURTAIN WALL

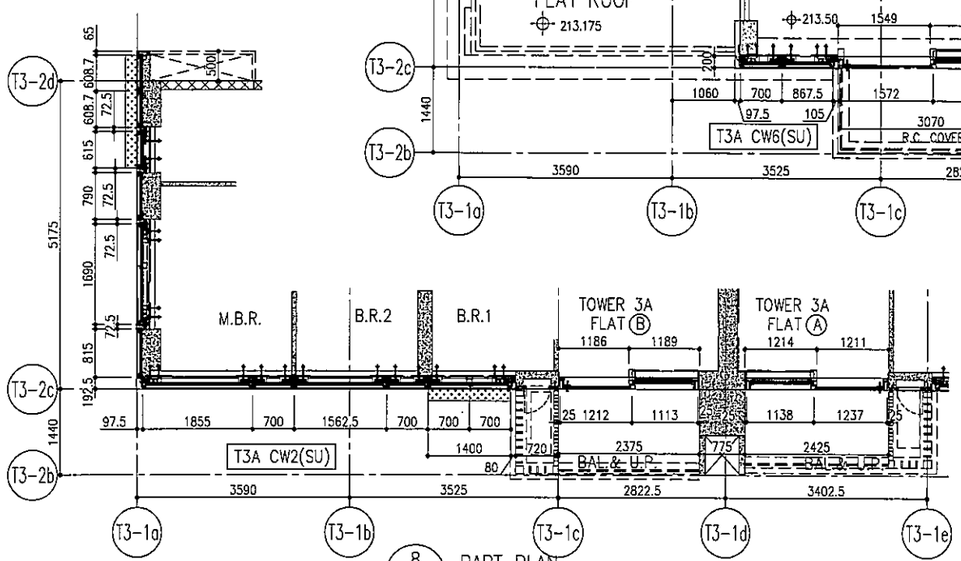

8 PART PLAN FOR CURTAIN WALL

9 PART PLAN FOR CURTAIN WALL

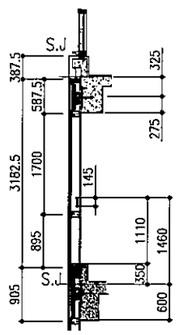

7 SECTION

LEGEND:

- G1 – 10mm THK. HEAT STRENGTHENED GLASS (OUTSIDE) +12mm AIR SPACE + 12mm THK. TEMPERED GLASS
- G2 – 10mm THK. HEAT STRENGTHENED GLASS (OUTSIDE) +12mm AIR SPACE + 10mm THK. TEMPERED GLASS
- G3 – 12mm THK. HEAT STRENGTHENED GLASS
- G4 – 12mm THK. CLEAR TEMPERED GLASS (INTERNAL PROTECTIVE BARRIER)
- G5 – 10mm THK. TINTED HEAT STRENGTHENED GLASS (DELETED)
- S – 10mm THK. CLEAR TEMPERED GLASS (DELETED)
- S – 8mm THK. CLEAR HEAT-STRENGTHENED GLASS + 2mm PVB + 8mm THK. CLEAR HEAT-STRENGTHENED GLASS (DELETED)
- 3 mm THK. ALUM. CLADDING
- 3 mm THK. ALUM. BACKPAN
- S.J. – STACK JOINT

B.D. REF :

CLIENT :
信和置業有限公司
Sino Land Company Limited

ARCHITECT :
ronald lu & partners
Architects . Planners . Interior Designers
Ronald Lu & Partners (HK) Ltd.
呂元祥建築師事務所(香港)有限公司

MAIN CONTRACTOR :
Gammon

STRUCTURAL ENGINEER :
AECOM

FACADE CONSULTANT:
AECOM

NOTE :
1. ALL DIMENSIONS ARE IN mm.
2. ALL ELEVATIONS ARE VIEWED FROM OUTSIDE.
3. ALL DIMENSIONS TO BE VERIFIED ON SITE BEFORE FABRICATION.

LEGEND :
- X1 / X001 – DETAIL MARK NO. / REFER SHEET NO.
1. F.F.L. – FINISHED FLOOR LEVEL
2. S.F.L. – STRUCTURAL FLOOR LEVEL
3. /R – REVERSED DETAIL

NO.	DATE	REVISED	BY
B	25/05/22	REVISED AS PER COMMENTS	LS
A	12/03/22	REVISED AS PER COMMENTS	LS

JOB NO. : J-858

PROJECT :
PROPOSED RESIDENTIAL DEVELOPMENT
AT TKOTL 70RP, PHASE 11, LOHAS PARK
TSEUNG KWAN O, N.T.

TITLE :
PENTHOUSE FLOOR PARTIAL ELEVATION & SECTION, PLAN FOR CURTAIN WALL (TOWER 3)

DATE : 22-OCT-21 | SCALE : 1:50(A1)

DRAWN BY : | CHECKED BY :

美特鋁製有限公司
MIDI ALUMINIUM FABRICATOR LTD.
Units 6-8, Sunray Industrial Centre, 1/F
610 Cha Kwo Ling Road, Kowloon
Tel:23489211-4 Fax:(852)27727666

DWG NO. : J858-CW-PE317 | REV. : B

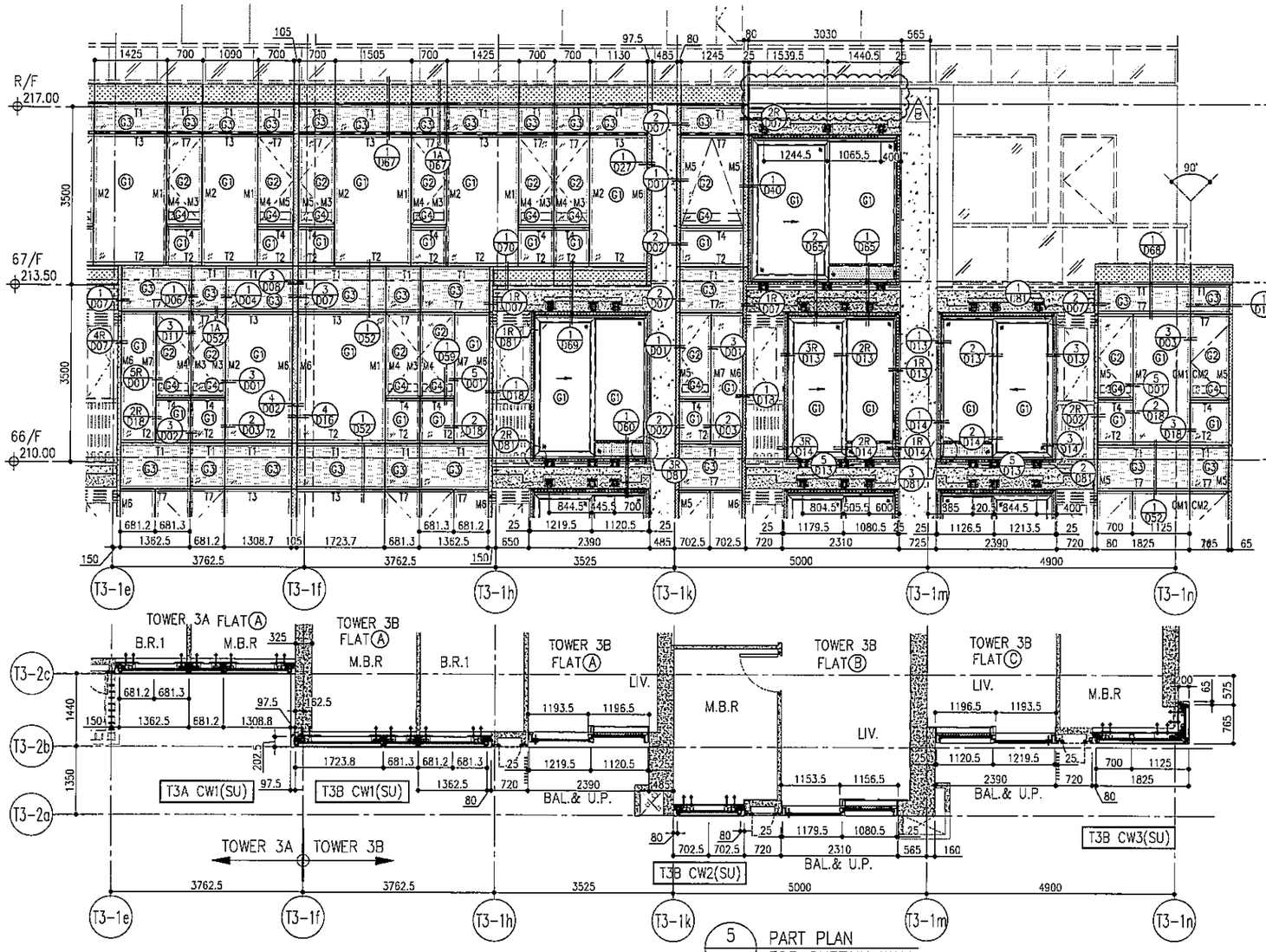

5 PART PLAN FOR CURTAIN WALL

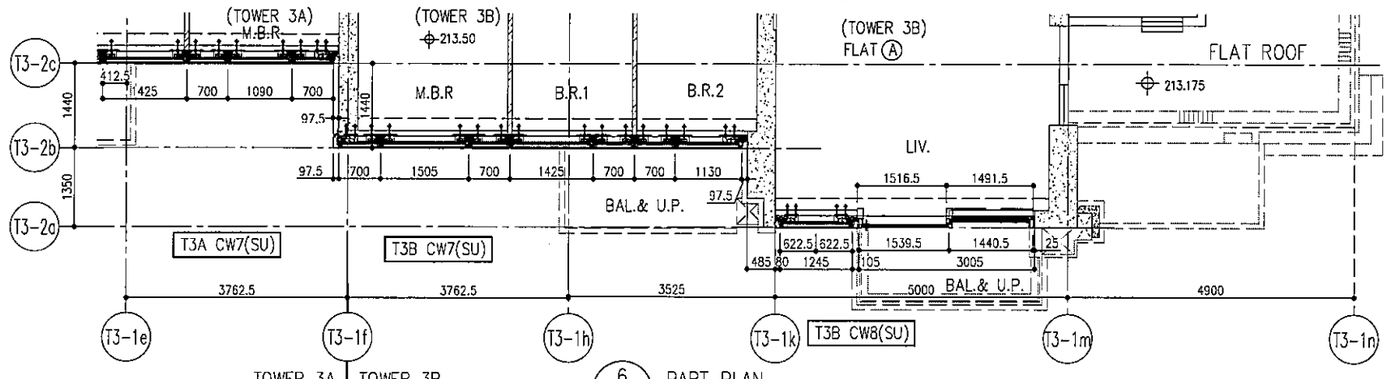

6 PART PLAN FOR CURTAIN WALL

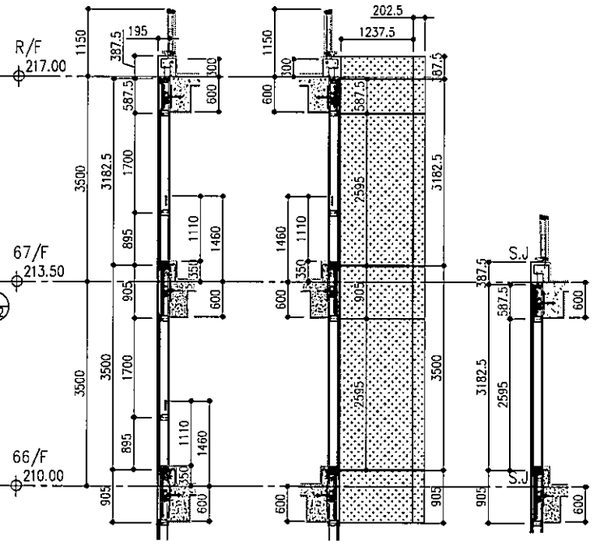

2 SECTION

3 SECTION

4 SECTION

LEGEND:

- G1 – 10mm THK. HEAT STRENGTHENED GLASS (OUTSIDE) +12mm AIR SPACE + 12mm THK. TEMPERED GLASS
- G2 – 10mm THK. HEAT STRENGTHENED GLASS (OUTSIDE) +12mm AIR SPACE + 10mm THK. TEMPERED GLASS
- G3 – 12mm THK. HEAT STRENGTHENED GLASS
- G4 – 12mm THK. CLEAR TEMPERED GLASS (INTERNAL PROTECTIVE BARRIER)
- G5 – 10mm THK. TINTED HEAT STRENGTHENED GLASS DELETED
- S5 – 10mm THK. CLEAR TEMPERED GLASS DELETED
- S2 – 8mm THK. CLEAR HEAT-STRENGTHENED GLASS + 2mm PVB + 8mm THK. CLEAR HEAT-STRENGTHENED GLASS DELETED
- 3 mm THK. ALUM. CLADDING
- 3 mm THK. ALUM. BACKPAN
- S.J. – STACK JOINT

B.D. REF :

CLIENT :
信和置業有限公司
Sino Land Company Limited

ARCHITECT :
ronald lu & partners
Ronald Lu & Partners (HK) Ltd.
呂元祥建築師事務所 (香港) 有限公司

MAIN CONTRACTOR :
Gammon

STRUCTURAL ENGINEER :
AECOM

FACADE CONSULTANT:
AECOM

NOTE :
1. ALL DIMENSIONS ARE IN mm.
2. ALL ELEVATIONS ARE VIEWED FROM OUTSIDE.
3. ALL DIMENSIONS TO BE VERIFIED ON SITE BEFORE FABRICATION.

LEGEND :
- X1 / X001 – DETAIL MARK NO. / REFER SHEET NO.
1. F.F.L. -- FINISHED FLOOR LEVEL
2. S.F.L. -- STRUCTURAL FLOOR LEVEL
3. (R) -- REVERSED DETAIL

NO.	DATE	REVISED	BY
B	25/05/22	REVISED AS PER COMMENTS	LS
A	12/03/22	REVISED AS PER COMMENTS	LS

JOB NO. : J-858

PROJECT :
PROPOSED RESIDENTIAL DEVELOPMENT
AT TKOTL 70RP, PHASE 11, LOHAS PARK
TSEUNG KWAN O, N.T.

TITLE :
PENTHOUSE FLOOR PARTIAL ELEVATION & SECTION, PLAN FOR CURTAIN WALL (TOWER 3)

DATE : 22-OCT-21 | SCALE : 1:50(A1)

DRAWN BY : | CHECKED BY :

美特鋁質有限公司
MIDI ALUMINIUM FABRICATOR LTD.
Units 6-8, Sunray Industrial Centre, 1/F
610 Cha Kwo Ling Road, Kowloon
Tel:23489211-4 Fax:(852)27727666

DWG NO. : J858-CW-PE318 | REV. : B

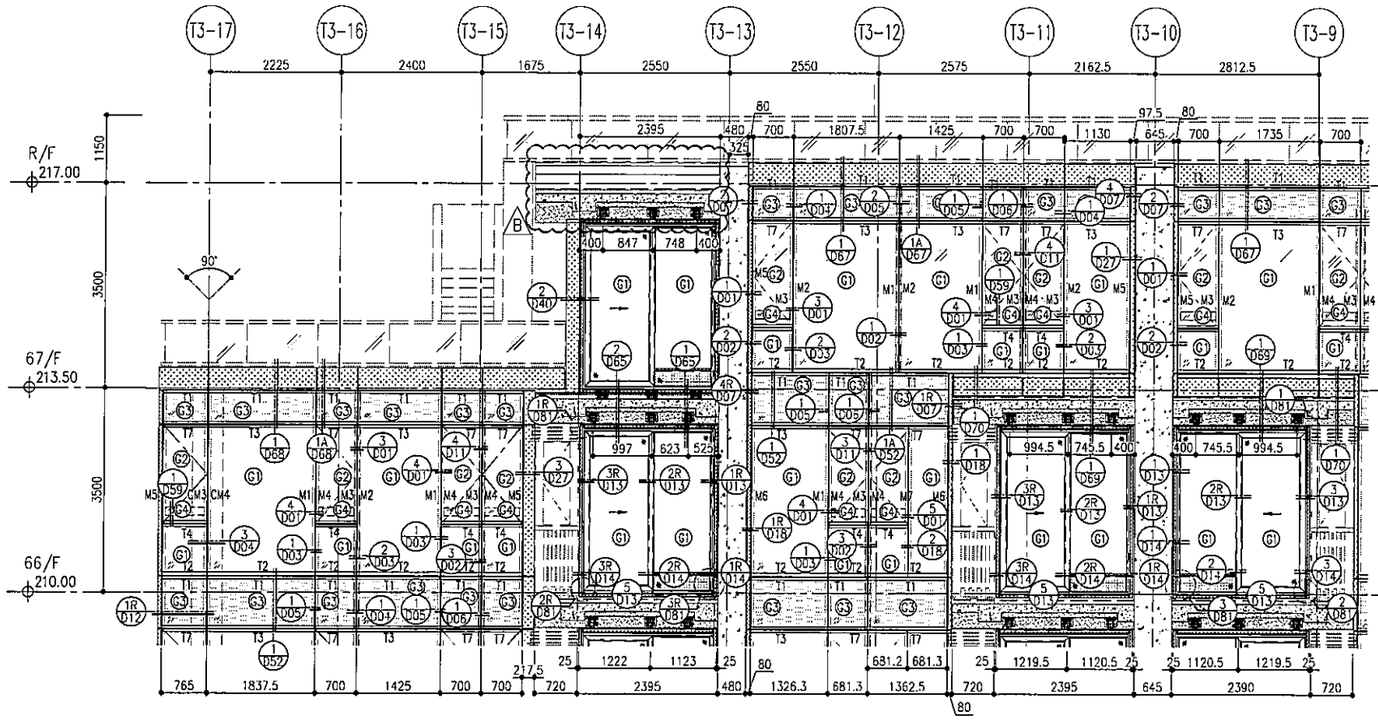

6 / – PART PLAN FOR CURTAIN WALL

7 / – PART PLAN FOR CURTAIN WALL

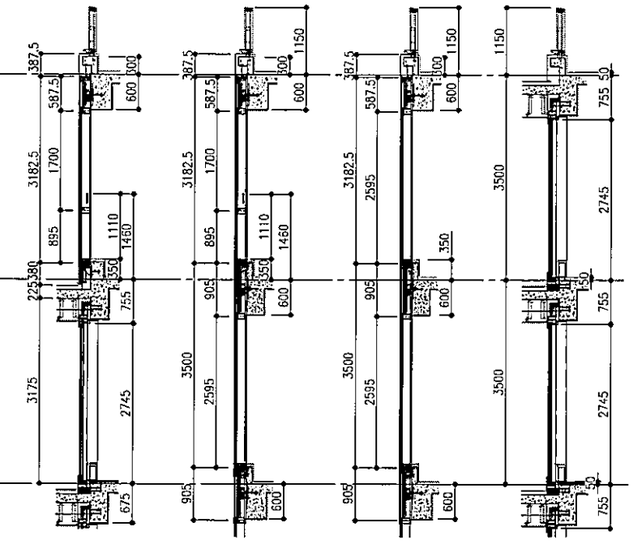

2 / – SECTION

3 / – SECTION

4 / – SECTION

5 / – SECTION

LEGEND:

- (G) – 10mm THK. HEAT STRENGTHENED GLASS (OUTSIDE) +12mm AIR SPACE + 12mm THK. TEMPERED GLASS
- (G2) – 10mm THK. HEAT STRENGTHENED GLASS (OUTSIDE) +12mm AIR SPACE + 10mm THK. TEMPERED GLASS
- (G3) – 12mm THK. HEAT STRENGTHENED GLASS
- (G4) – 12mm THK. CLEAR TEMPERED GLASS (INTERNAL PROTECTIVE BARRIER)
- (G5) – 10mm THK. TINTED HEAT STRENGTHENED GLASS DELETED
- (S) – 10mm THK. CLEAR TEMPERED GLASS DELETED
- (S1) – 8mm THK. CLEAR HEAT-STRENGTHENED GLASS + 2mm PVB + 8mm THK. CLEAR HEAT STRENGTHENED GLASS DELETED
- 3 mm THK. ALUM. CLADDING
- 3 mm THK. ALUM. BACKPAN
- S.J. – STACK JOINT

B.D. REF :

CLIENT :
信和置業有限公司
Sino Land Company Limited

ARCHITECT :
ronald lu & partners
Architects . Planners . Interior Designers
Ronald Lu & Partners (HK) Ltd.
呂元祥建築師事務所(香港)有限公司

MAIN CONTRACTOR :
Gammon

STRUCTURAL ENGINEER :
AECOM

FACADE CONSULTANT:
AECOM

NOTE :
1. ALL DIMENSIONS ARE IN mm.
2. ALL ELEVATIONS ARE VIEWED FROM OUTSIDE.
3. ALL DIMENSIONS TO BE VERIFIED ON SITE BEFORE FABRICATION.

LEGEND :
- (X1 / X001) – DETAIL MARK NO. / REFER SHEET NO.
1. F.F.L. --FINISHED FLOOR LEVEL
2. S.F.L. --STRUCTURAL FLOOR LEVEL
3. (/R) --REVERSED DETAIL

NO.	DATE	REVISED	BY
B	26/05/22	REVISED AS PER COMMENTS	LS
A	12/03/22	REVISED AS PER COMMENTS	LS

JOB NO. : J-858

PROJECT :
PROPOSED RESIDENTIAL DEVELOPMENT
AT TKOTL 70RP, PHASE 11, LOHAS PARK
TSEUNG KWAN O, N.T.

TITLE :
PENTHOUSE FLOOR PARTIAL ELEVATION & SECTION, PLAN FOR CURTAIN WALL (TOWER 3)

DATE : 22-OCT-21 | SCALE : 1:50(A1)

DRAWN BY : | CHECKED BY :

美特鋁質有限公司
MIDI ALUMINIUM FABRICATOR LTD.
Units 6-8, Sunray Industrial Centre, 1/F
610 Cha Kwo Ling Road, Kowloon
Tel:23489211-4 Fax:(852)27727666

DWG NO. : J858-CW-PE319 | REV. : B

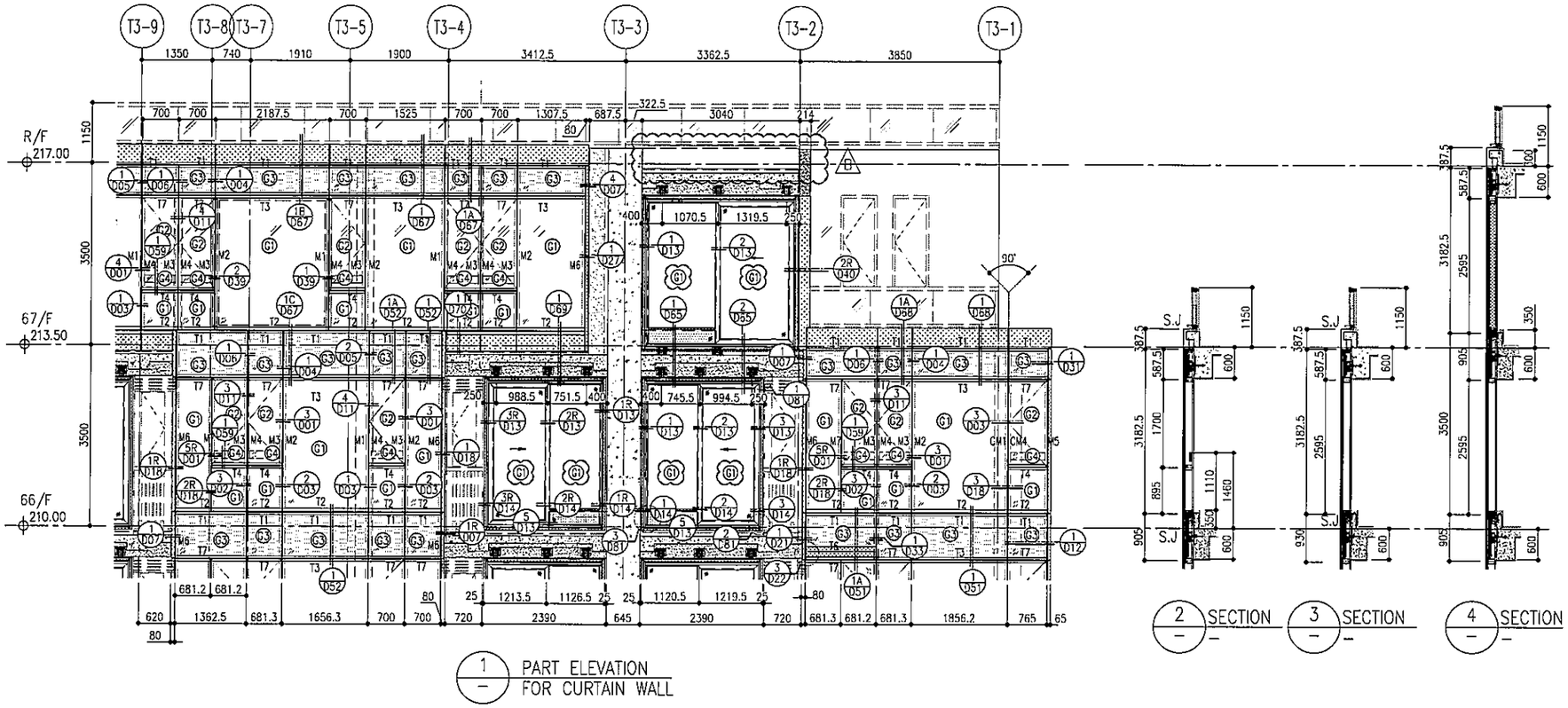

1 / – PART ELEVATION FOR CURTAIN WALL

2 / – SECTION

3 / – SECTION

4 / – SECTION

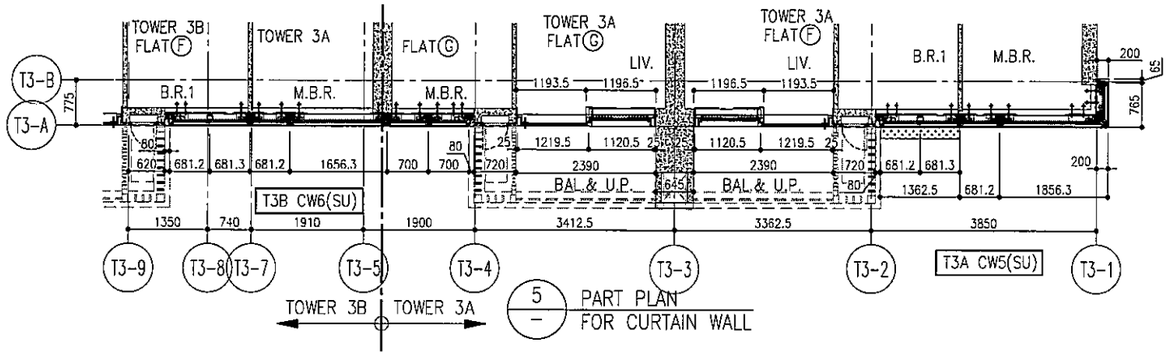

5 / – PART PLAN FOR CURTAIN WALL

TOWER 3B | TOWER 3A

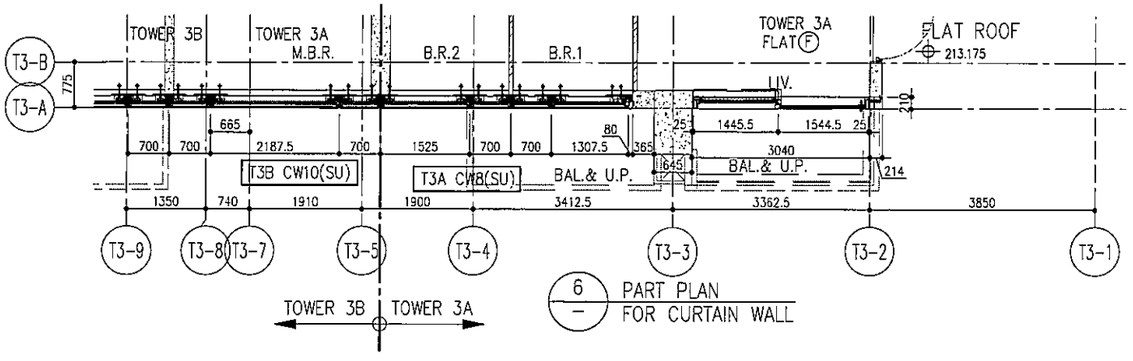

6 / – PART PLAN FOR CURTAIN WALL

TOWER 3B | TOWER 3A

LEGEND:

- 61 – 10mm THK. HEAT STRENGTHENED GLASS (OUTSIDE) +12mm AIR SPACE + 12mm THK. TEMPERED GLASS
- 62 – 10mm THK. HEAT STRENGTHENED GLASS (OUTSIDE) +12mm AIR SPACE + 10mm THK. TEMPERED GLASS
- 63 – 12mm THK. HEAT STRENGTHENED GLASS
- 64 – 12mm THK. CLEAR TEMPERED GLASS (INTERNAL PROTECTIVE BARRIER)
- 65 – 10mm THK. TINTED HEAT STRENGTHENED GLASS DELETED
- S1 – 10mm THK. CLEAR TEMPERED GLASS DELETED
- S2 – 8mm THK. CLEAR HEAT-STRENGTHENED GLASS +2mm PVB + 8mm THK. CLEAR HEAT-STRENGTHENED GLASS DELETED
- 3 mm THK. ALUM. CLADDING
- 3 mm THK. ALUM. BACKPAN
- S.J. – STACK JOINT

B.D. REF :

CLIENT :
信和置業有限公司
Sino Land Company Limited

ARCHITECT :
ronald lu & partners
Architects · Planners · Interior Designers
Ronald Lu & Partners (HK) Ltd.
呂元祥建築師事務所(香港)有限公司

MAIN CONTRACTOR :
Gammon

STRUCTURAL ENGINEER :
AECOM

FACADE CONSULTANT:
AECOM

NOTE :
1. ALL DIMENSIONS ARE IN mm.
2. ALL ELEVATIONS ARE VIEWED FROM OUTSIDE.
3. ALL DIMENSIONS TO BE VERIFIED ON SITE BEFORE FABRICATION.

LEGEND :
- X1 / X001 — DETAIL MARK NO. / REFER SHEET NO.
1. F.F.L. --FINISHED FLOOR LEVEL
2. S.F.L. --STRUCTURAL FLOOR LEVEL
3. /R --REVERSED DETAIL

NO.	DATE	REVISED	BY
B	25/05/22	REVISED AS PER COMMENTS	LS
A	12/03/22	REVISED AS PER COMMENTS	LS

JOB NO. : J-858

PROJECT :
PROPOSED RESIDENTIAL DEVELOPMENT
AT TIKOTL 70RP, PHASE 11, LOHAS PARK
TSEUNG KWAN O, N.T.

TITLE :
PENTHOUSE FLOOR PARTIAL ELEVATION & SECTION, PLAN FOR CURTAIN WALL (TOWER 3)

DATE : 22-OCT-21 | SCALE : 1:50(A1)

DRAWN BY : | CHECKED BY :

美特鋁製有限公司
MIDI ALUMINIUM FABRICATOR LTD.
Units 6-8, Sunray Industrial Centre, 1/F
610 Cha Kwo Ling Road, Kowloon
Tel:23489211-4 Fax:(852)27727666

DWG NO. : J858-CW-PE320 | REV. : B

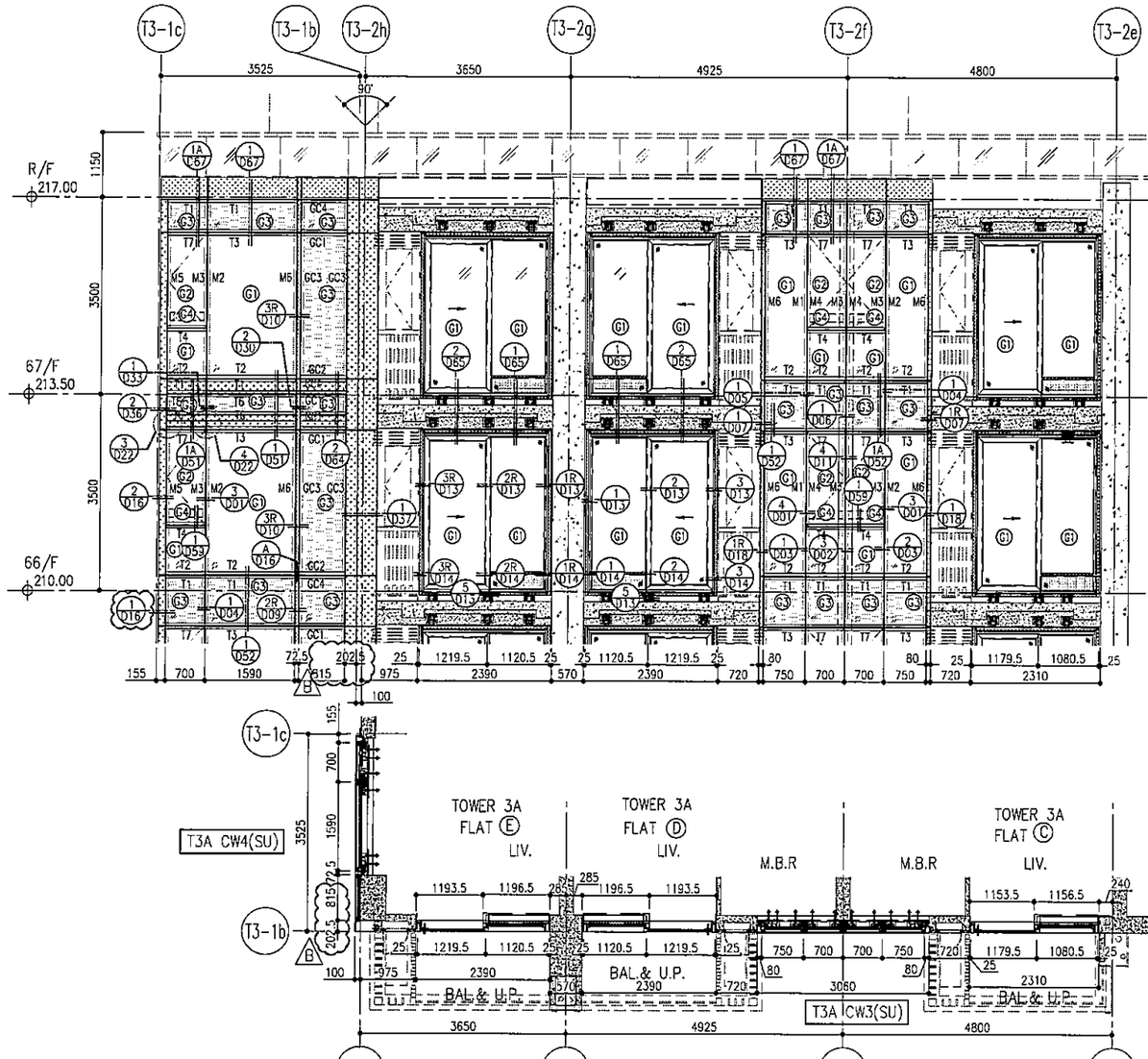

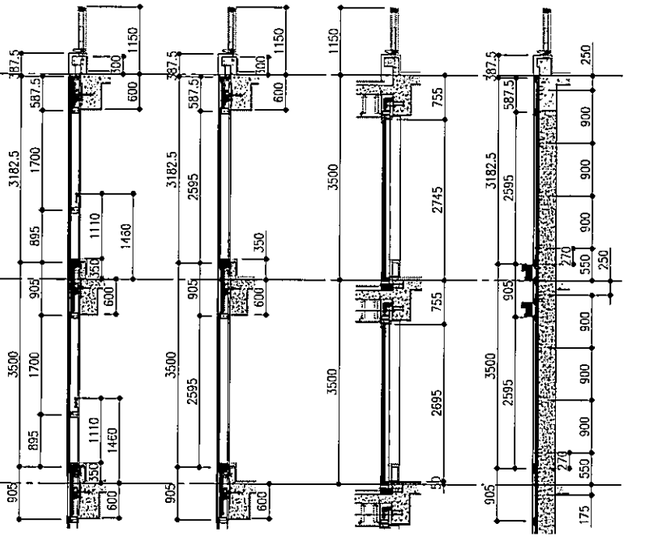

LEGEND:

- G1 – 10mm THK. HEAT STRENGTHENED GLASS (OUTSIDE) +12mm AIR SPACE + 12mm THK. TEMPERED GLASS
- G2 – 10mm THK. HEAT STRENGTHENED GLASS (OUTSIDE) +12mm AIR SPACE + 10mm THK. TEMPERED GLASS
- G3 – 12mm THK. HEAT STRENGTHENED GLASS
- G4 – 12mm THK. CLEAR TEMPERED GLASS (INTERNAL PROTECTIVE BARRIER)
- G5 – 10mm ~~BLUE~~ TINTED HEAT STRENGTHENED GLASS DELETED
- S1 – 10mm ~~THK. CLEAR~~ TEMPERED GLASS DELETED
- S2 – 8mm THK. CLEAR HEAT-STRENGTHENED GLASS +2mm PVB + 8mm THK. CLEAR HEAT-STRENGTHENED GLASS DELETED
- 3 mm THK. ALUM. CLADDING
- 3 mm THK. ALUM. BACKPAN
- S.J. – STACK JOINT

B.D. REF :

CLIENT :
信和置業有限公司
Sino Land Company Limited

ARCHITECT :
ronald lu & partners
Architects · Planners · Interior Designers
Ronald Lu & Partners (HK) Ltd.
呂元祥建築師事務所(香港)有限公司

MAIN CONTRACTOR :
Gammon

STRUCTURAL ENGINEER :
AECOM

FACADE CONSULTANT:
AECOM

NOTE :
1. ALL DIMENSIONS ARE IN mm.
2. ALL ELEVATIONS ARE VIEWED FROM OUTSIDE.
3. ALL DIMENSIONS TO BE VERIFIED ON SITE BEFORE FABRICATION.

LEGEND :
- (X1 / XDD1) — DETAIL MARK NO. / REFER SHEET NO.
1. F.F.L. --FINISHED FLOOR LEVEL
2. S.F.L. --STRUCTURAL FLOOR LEVEL
3. (/R) --REVERSED DETAIL

NO.	DATE	REVISED	BY
B	26/05/22	REVISED AS PER COMMENTS	LS
A	12/03/22	REVISED AS PER COMMENTS	LS

JOB NO. : J-858

PROJECT :
PROPOSED RESIDENTIAL DEVELOPMENT
AT TKOTL 70RP, PHASE 11, LOHAS PARK
TSEUNG KWAN O, N.T.

TITLE :
PENTHOUSE FLOOR PARTIAL ELEVATION & SECTION, PLAN FOR CURTAIN WALL (TOWER 3)

DATE : 22-OCT-21 | SCALE : 1:50(A1)

DRAWN BY : | CHECKED BY :

美特鋁質有限公司
MIDI ALUMINIUM FABRICATOR LTD.
Units 6-8, Sunray Industrial Centre, 1/F
610 Cha Kwo Ling Road, Kowloon
Tel:23489211-4 Fax:(852)27727666

DWG NO. : J858-CW-PE321 | REV. : B

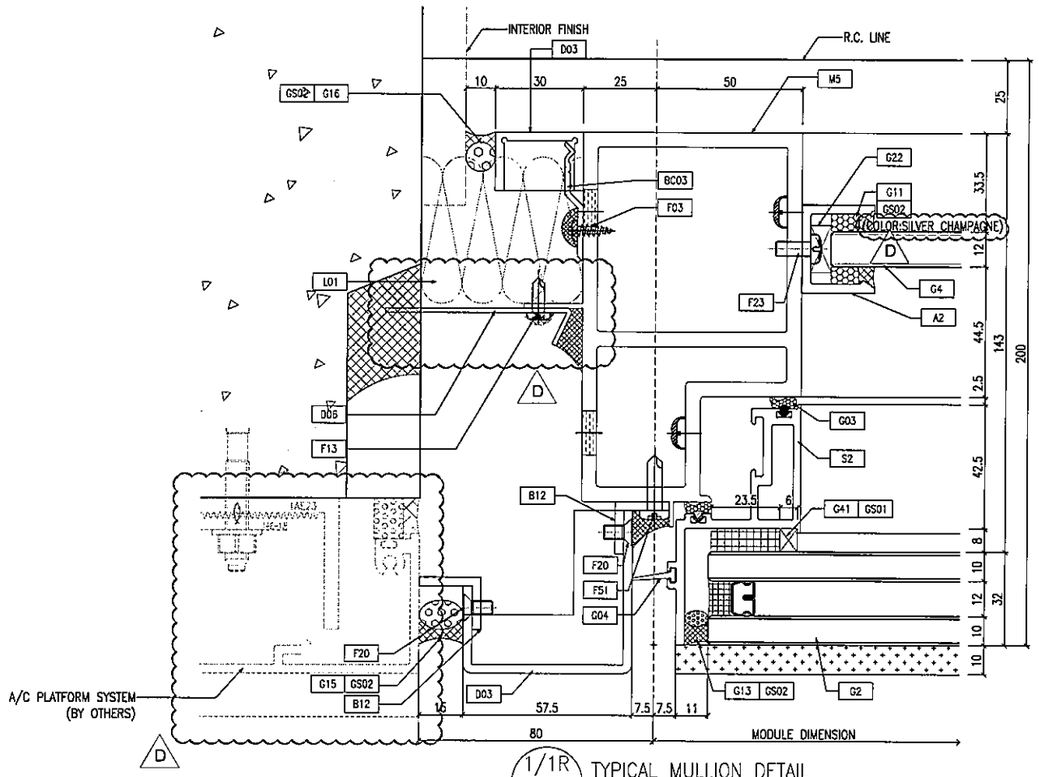

1/1R D01 TYPICAL MULLION DETAIL CURTAIN WALL

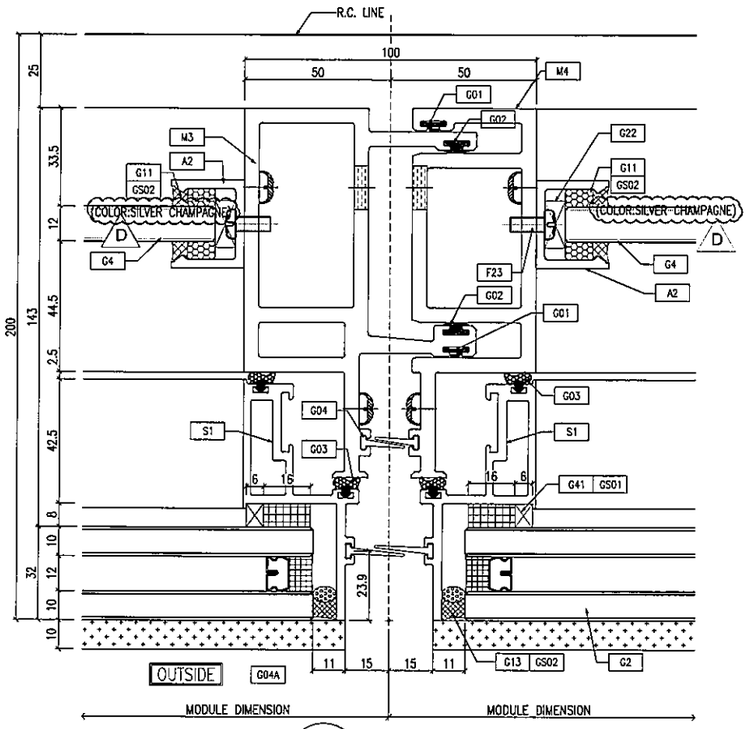

2 D01 TYPICAL MULLION DETAIL CURTAIN WALL

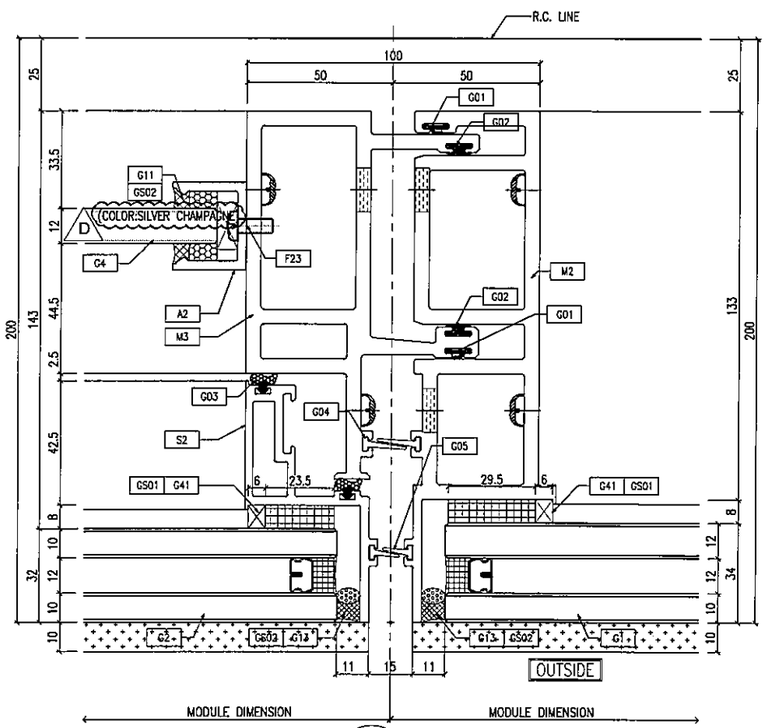

3 D01 TYPICAL MULLION DETAIL CURTAIN WALL

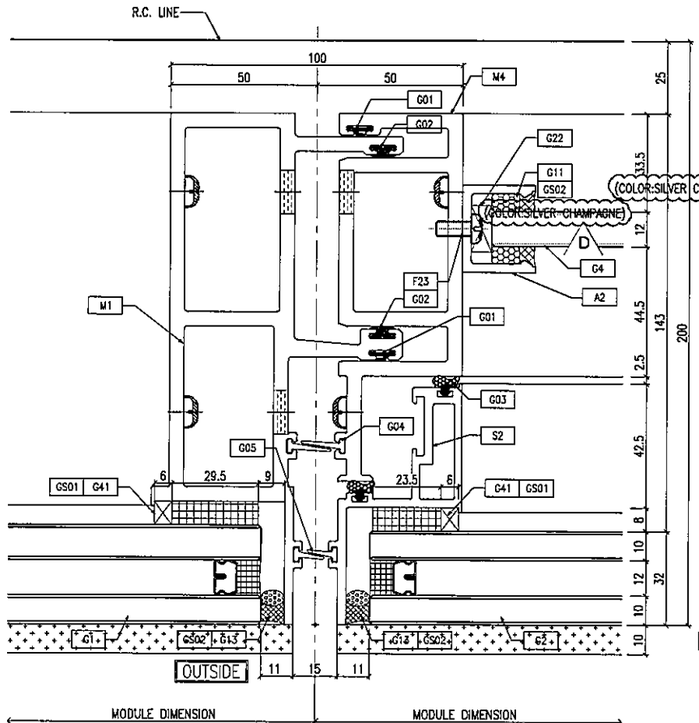

4 D01 TYPICAL MULLION DETAIL CURTAIN WALL

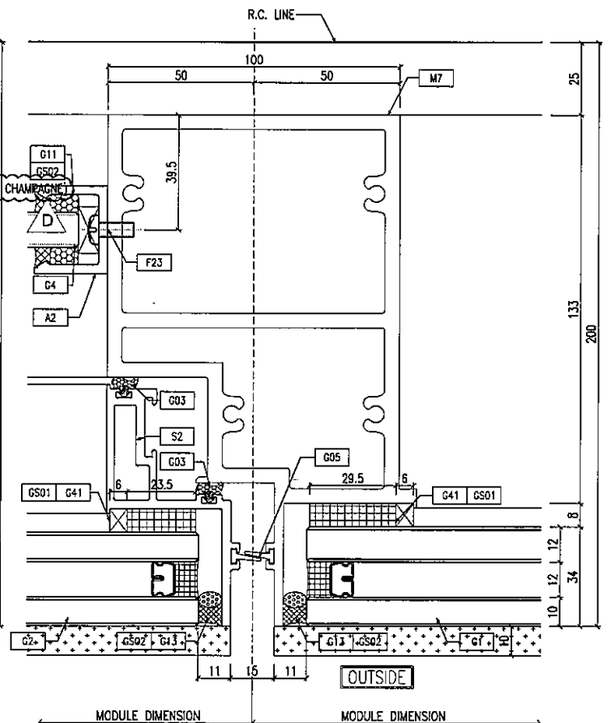

5 D01 TYPICAL MULLION DETAIL CURTAIN WALL

B.D. REF :

CLIENT :
信和置業有限公司
Sino Land Company Limited

ARCHITECT :
ronald lu & partners
Architects, Planners, Interior Designers
Ronald Lu & Partners (HK) Ltd.
呂元祥建築師事務所(香港)有限公司

MAIN CONTRACTOR :
Gammon

STRUCTURAL ENGINEER :
AECOM

FACADE CONSULTANT:
AECOM

NOTE :
1. ALL DIMENSIONS ARE IN mm.
2. ALL ELEVATIONS ARE VIEWED FROM OUTSIDE.
3. ALL DIMENSIONS TO BE VERIFIED ON SITE BEFORE FABRICATION.

LEGEND :
X1 — DETAIL MARK NO.
X001 — REFER SHEET NO.
1. F.F.L. --FINISHED FLOOR LEVEL
2. S.F.L. --STRUCTURAL FLOOR LEVEL
3. /R --REVERSED DETAIL

NO.	DATE	REVISED	BY
D	25/05/22	REVISED AS PER COMMENTS	LS
C	07/04/22	REVISED AS PER COMMENTS	LS
B	25/01/22	REVISED AS PER COMMENTS	LS
A	23/12/21	REVISED AS PER COMMENTS	LS

JOB NO. : J-858

PROJECT :
PROPOSED RESIDENTIAL DEVELOPMENT
AT TKOTL 70RP, PHASE 11, LOHAS PARK
TSEUNG KWAN O, N.T.

TITLE :
TYPICAL MULLION DETAIL
FOR CURTAIN WALL

DATE : 22-OCT-21 | SCALE : 1:1(A1)

DRAWN BY : | CHECKED BY :

美特鋁質有限公司
MIDI ALUMINUM FABRICATOR LTD.
Units 6-8, Sunray Industrial Centre, 1/F
610 Cha Kwo Ling Road, Kowloon
Tel:23489211-4 Fax:(852)27727666

DWG NO. : J858-CW-D01 | REV. : D

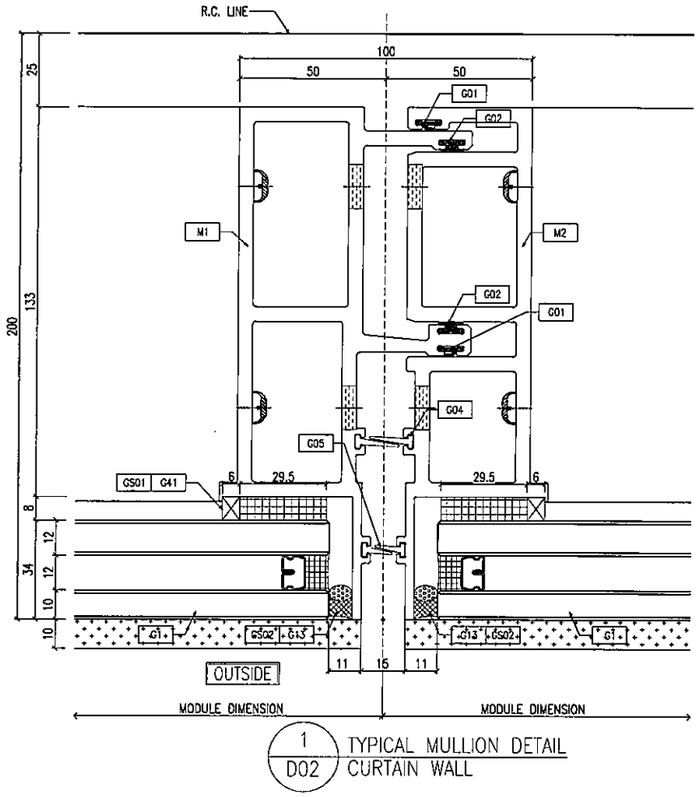

1 / D02 TYPICAL MULLION DETAIL CURTAIN WALL

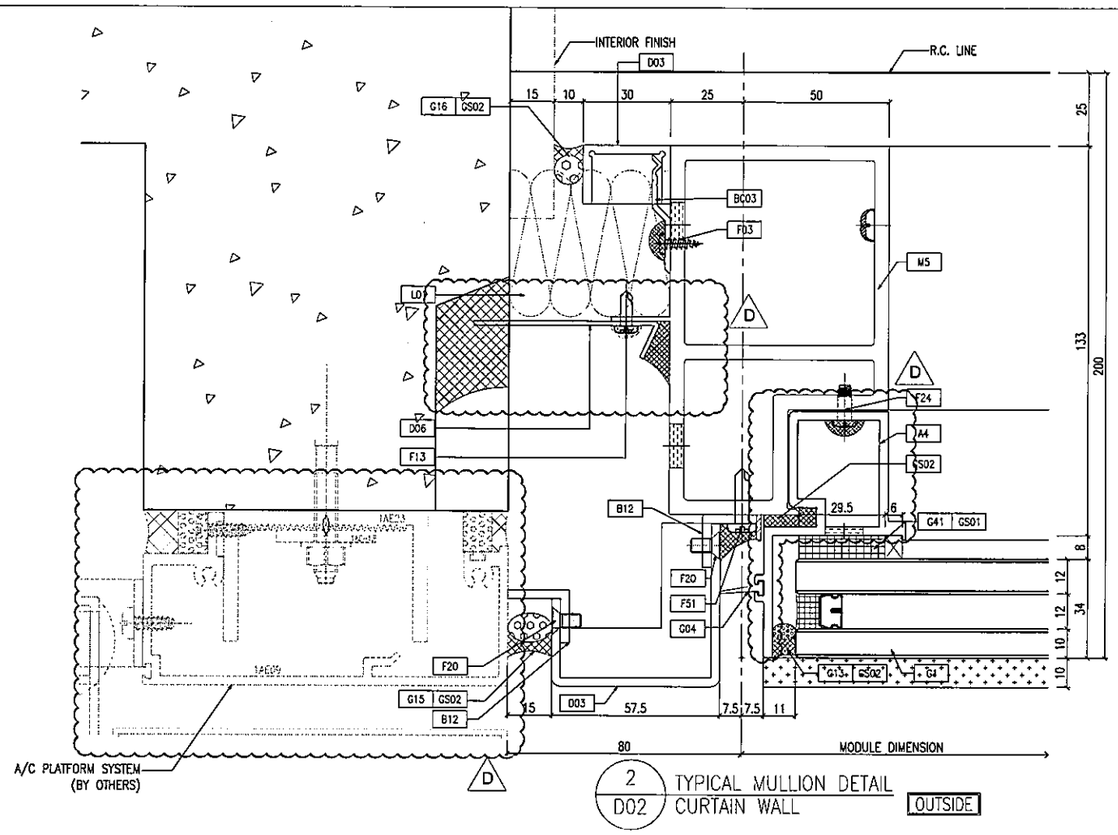

2 / D02 TYPICAL MULLION DETAIL CURTAIN WALL OUTSIDE

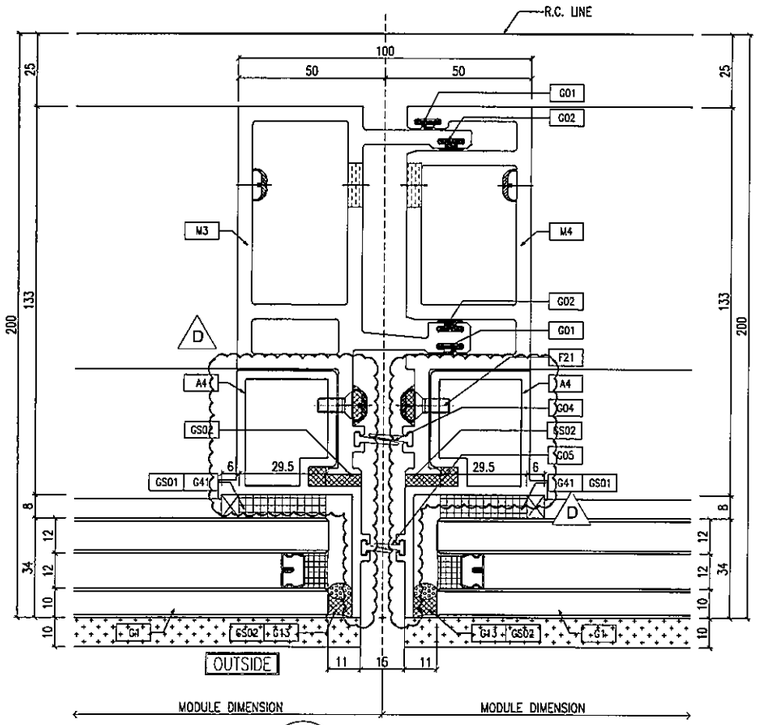

3 / D02 TYPICAL MULLION DETAIL CURTAIN WALL

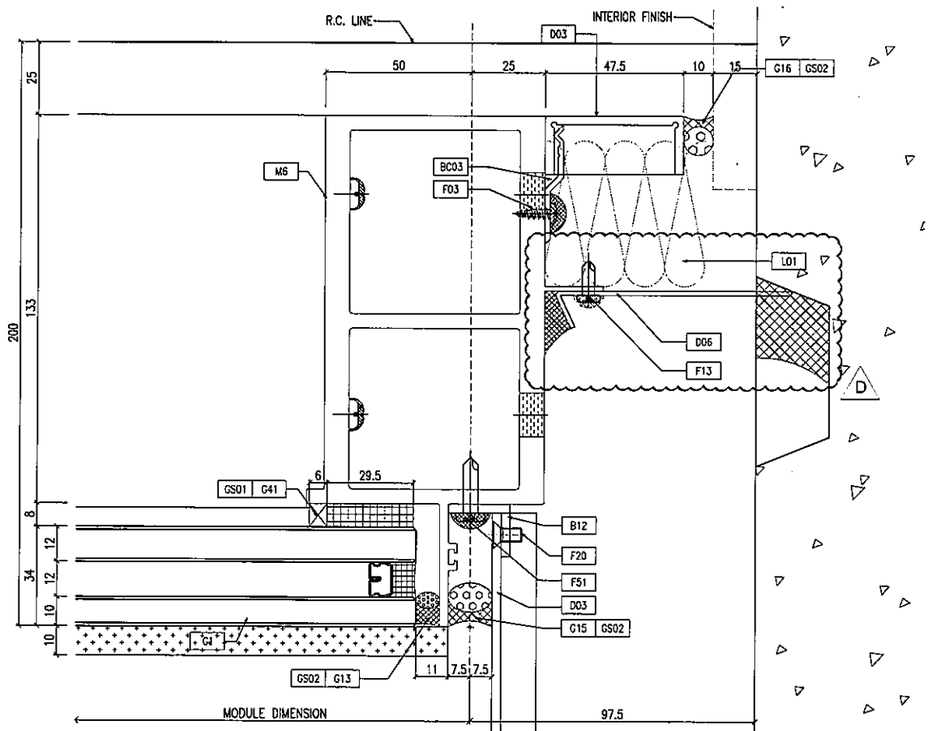

4 / D02 TYPICAL MULLION DETAIL CURTAIN WALL OUTSIDE

B.D. REF :

CLIENT :
信和置業有限公司
Sino Land Company Limited

ARCHITECT :
ronald lu & partners
Architects · Planners · Interior Designers
Ronald Lu & Partners (HK) Ltd.
呂元祥建築師事務所(香港)有限公司

MAIN CONTRACTOR :
Gammon

STRUCTURAL ENGINEER :
AECOM

FACADE CONSULTANT:
AECOM

NOTE :
1. ALL DIMENSIONS ARE IN mm.
2. ALL ELEVATIONS ARE VIEWED FROM OUTSIDE.
3. ALL DIMENSIONS TO BE VERIFIED ON SITE BEFORE FABRICATION.

LEGEND :
- X1 / XG01 — DETAIL MARK NO. / REFER SHEET NO.
1. F.F.L. --FINISHED FLOOR LEVEL
2. S.F.L. --STRUCTURAL FLOOR LEVEL
3. (R) --REVERSED DETAIL

NO.	DATE	REVISED	BY
D	25/05/22	REVISED AS PER COMMENTS	LS
C	07/04/22	REVISED AS PER COMMENTS	LS
B	25/01/22	REVISED AS PER COMMENTS	LS
A	23/12/21	REVISED AS PER COMMENTS	LS

JOB NO. : J-858

PROJECT :
PROPOSED RESIDENTIAL DEVELOPMENT
AT TKOTL 70RP, PHASE 11, LOHAS PARK
TSEUNG KWAN O, N.T.

TITLE :
TYPICAL MULLION DETAIL
FOR CURTAIN WALL

DATE : 22-OCT-21 | SCALE : 1:1(A1)

DRAWN BY : | CHECKED BY :

美特鋁質有限公司
MIDI ALUMINIUM FABRICATOR LTD.
Units 6-8, Sunray Industrial Centre, 1/F
610 Cha Kwo Ling Road, Kowloon
Tel:23489211-4 Fax:(852)27727666

DWG NO. : J858-CW-D02 | REV. : D

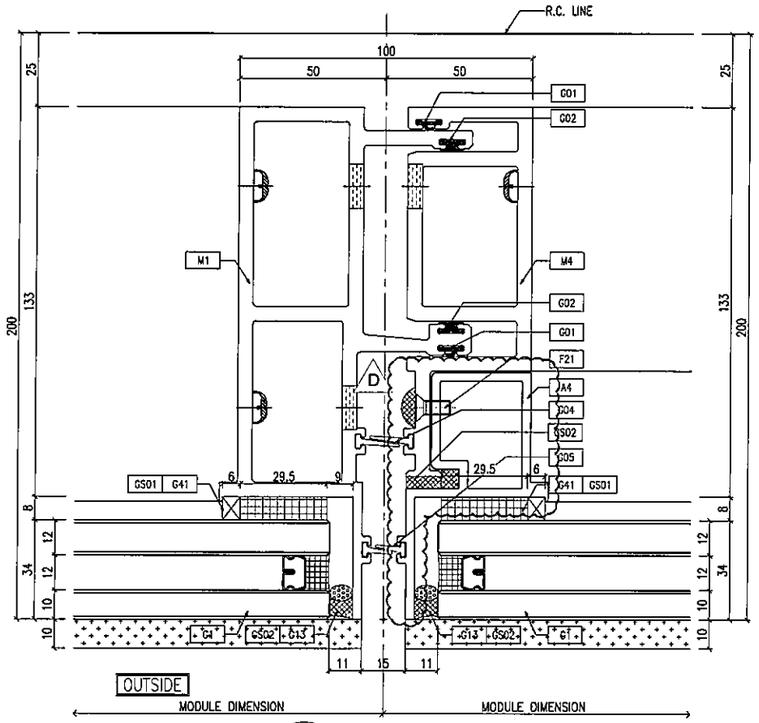

1 / D03 TYPICAL MULLION DETAIL CURTAIN WALL

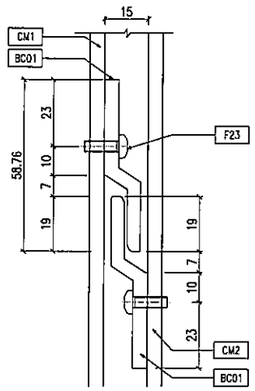

A / D03 SECTION A-A

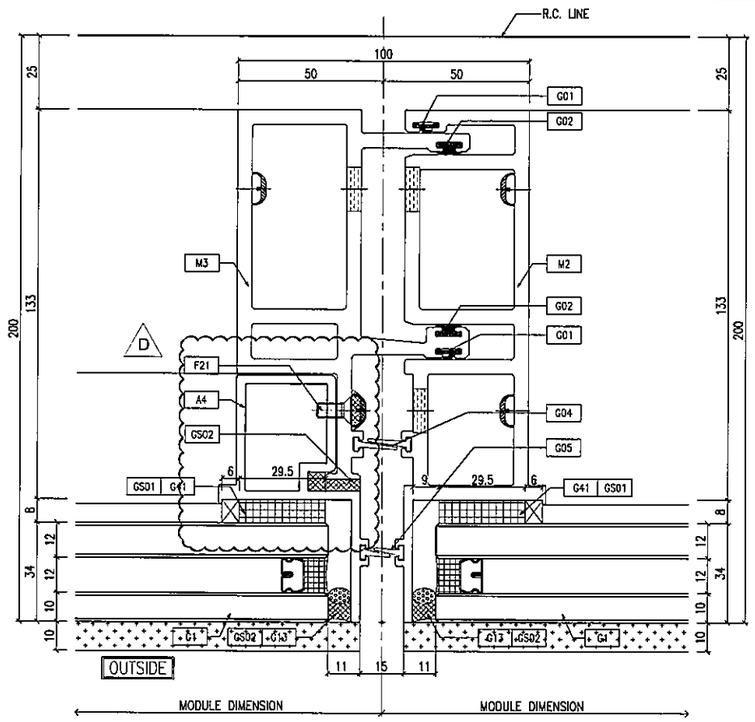

2 / D03 TYPICAL MULLION DETAIL CURTAIN WALL

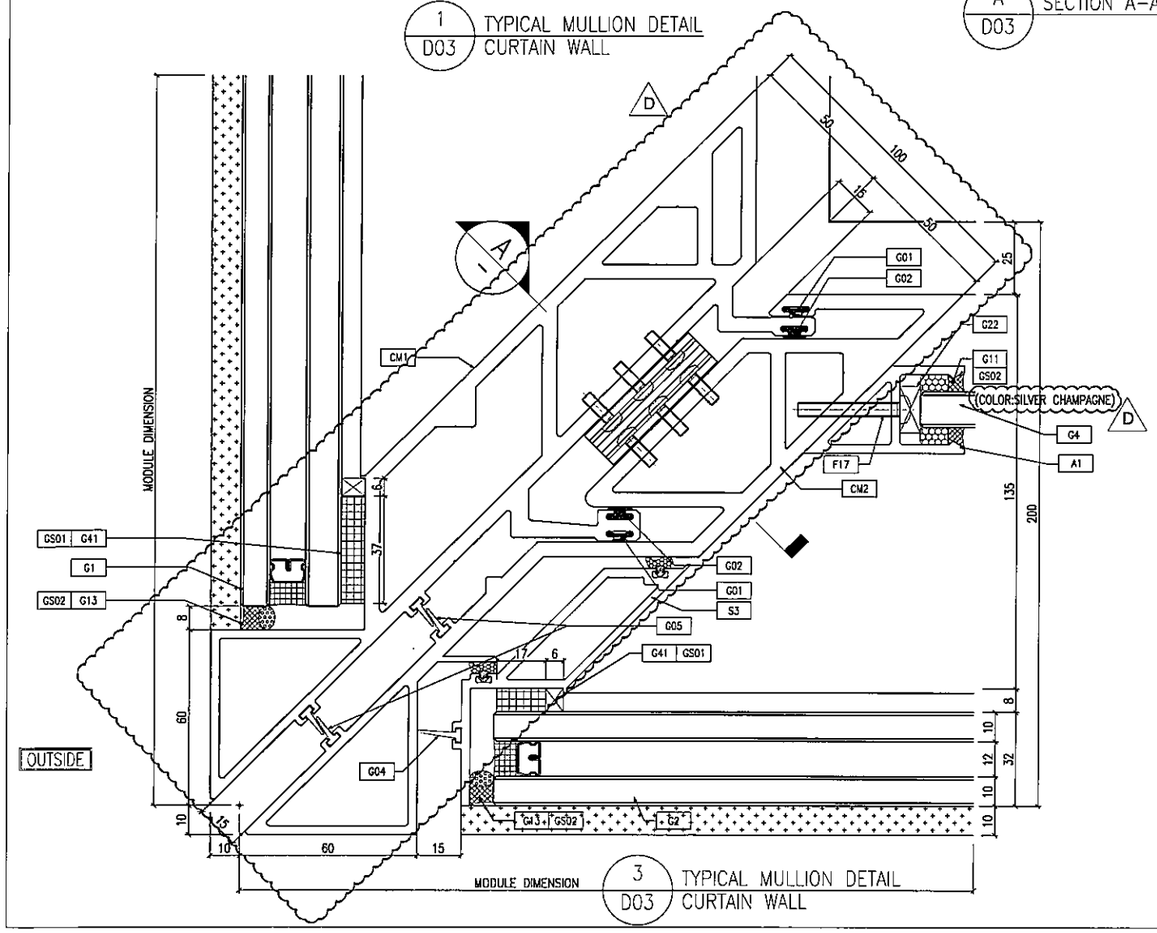

3 / D03 TYPICAL MULLION DETAIL CURTAIN WALL

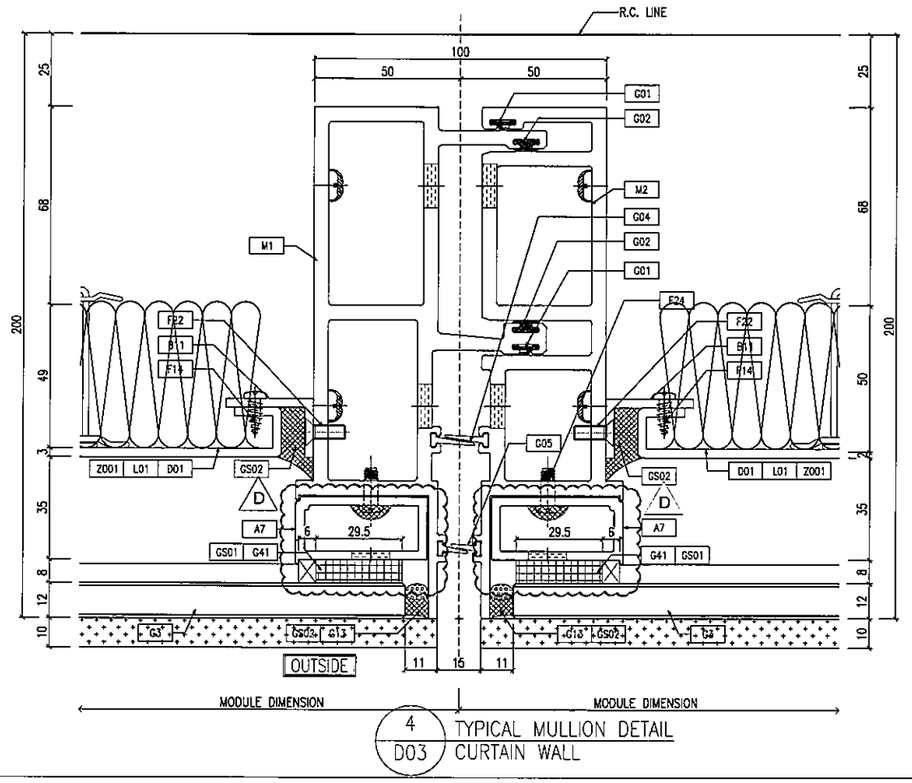

4 / D03 TYPICAL MULLION DETAIL CURTAIN WALL

B.D. REF :

CLIENT :
信和置業有限公司
Sino Land Company Limited

ARCHITECT :
ronald lu & partners
Architects · Planners · Interior Designers
Ronald Lu & Partners (HK) Ltd.
呂元祥建築師事務所(香港)有限公司

MAIN CONTRACTOR :
Gammon

STRUCTURAL ENGINEER :
AECOM

FACADE CONSULTANT:
AECOM

NOTE :
1. ALL DIMENSIONS ARE IN mm.
2. ALL ELEVATIONS ARE VIEWED FROM OUTSIDE.
3. ALL DIMENSIONS TO BE VERIFIED ON SITE BEFORE FABRICATION.

LEGEND :
X1 / X001 — DETAIL MARK NO. / REFER SHEET NO.
1. F.F.L. --FINISHED FLOOR LEVEL
2. S.F.L. ---STRUCTURAL FLOOR LEVEL
3. (/R) --REVERSED DETAIL

NO.	DATE	REVISED	BY
D	25/05/22	REVISED AS PER COMMENTS	LS
C	07/04/22	REVISED AS PER COMMENTS	LS
B	25/01/22	REVISED AS PER COMMENTS	LS
A	23/12/21	REVISED AS PER COMMENTS	LS

JOB NO. : J-858

PROJECT :
PROPOSED RESIDENTIAL DEVELOPMENT
AT TKOTL 70RP, PHASE 11, LOHAS PARK
TSEUNG KWAN O, N.T.

TITLE :
TYPICAL MULLION DETAIL
FOR CURTAIN WALL

DATE : 22-OCT-21 | SCALE : 1:1(A1)

DRAWN BY : | CHECKED BY :

美特鋁質有限公司
MIDI ALUMINIUM FABRICATOR LTD.
Units 6-8, Sunray Industrial Centre, 1/F
610 Cha Kwo Ling Road, Kowloon
Tel:23489211-4 Fax:(852)27727666

DWG NO. : J858-CW-D03 | REV. : D

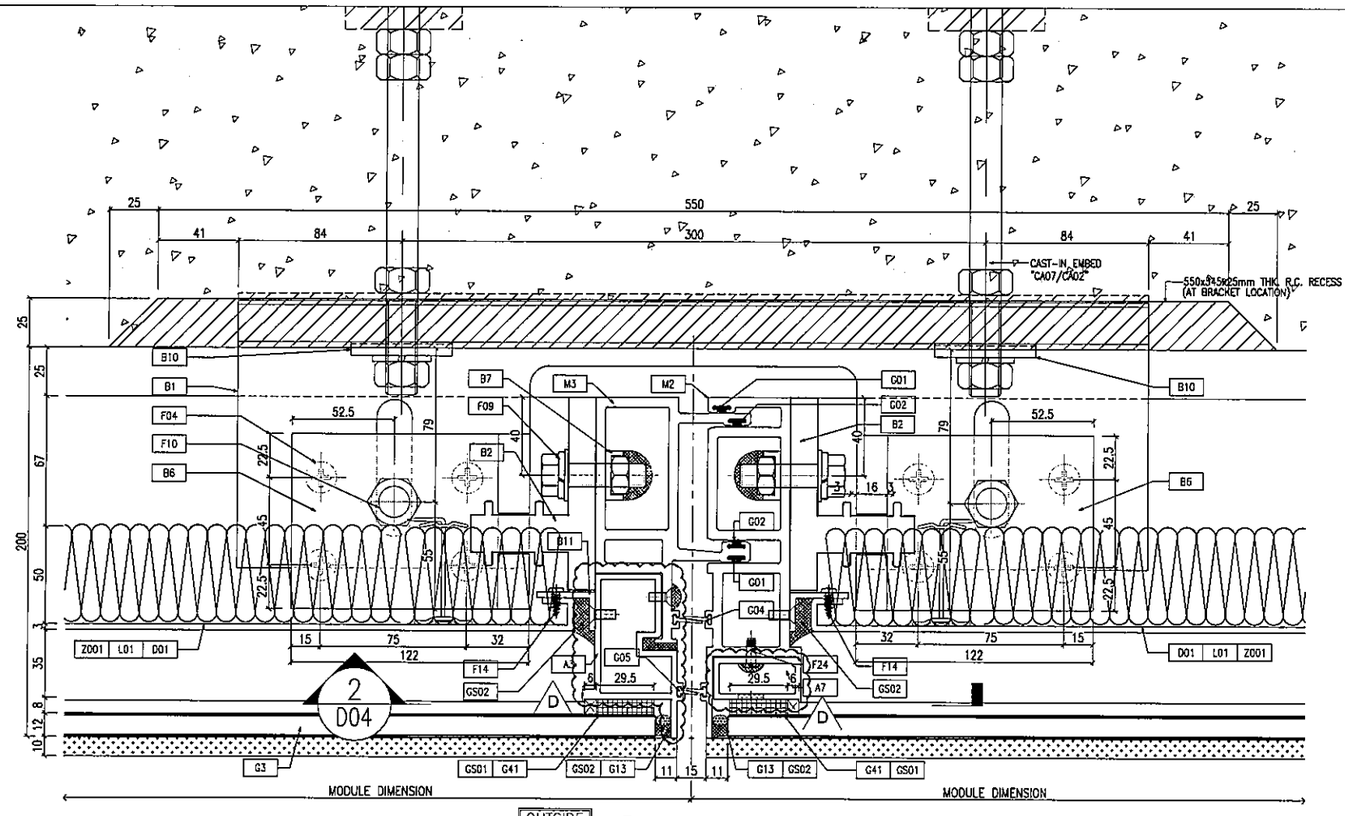

1 / D04 TYPICAL MULLION DETAIL CURTAIN WALL

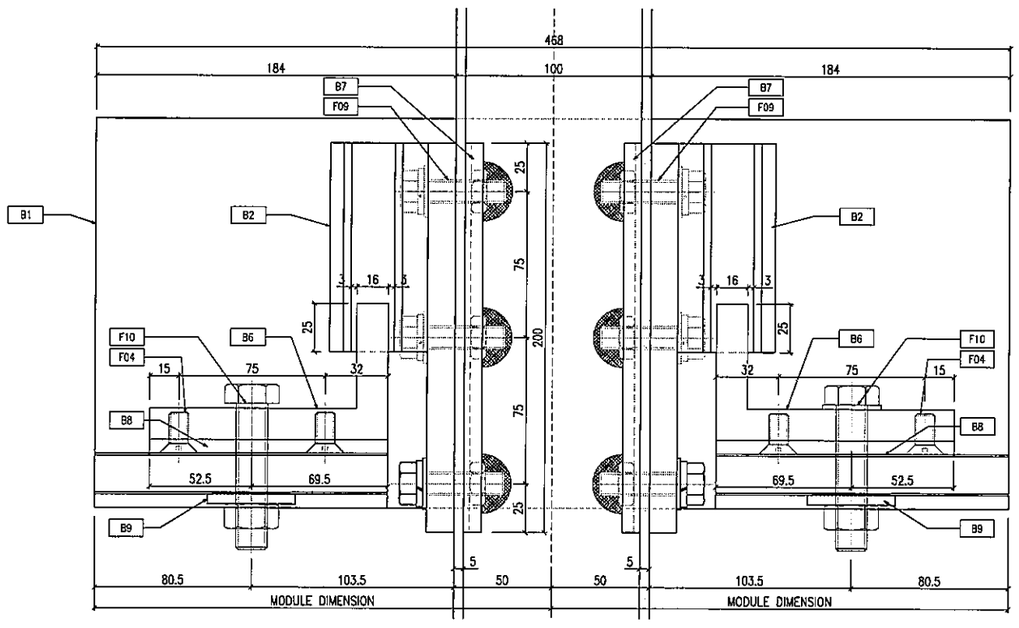

2 / D04 TYPICAL MULLION DETAIL CURTAIN WALL

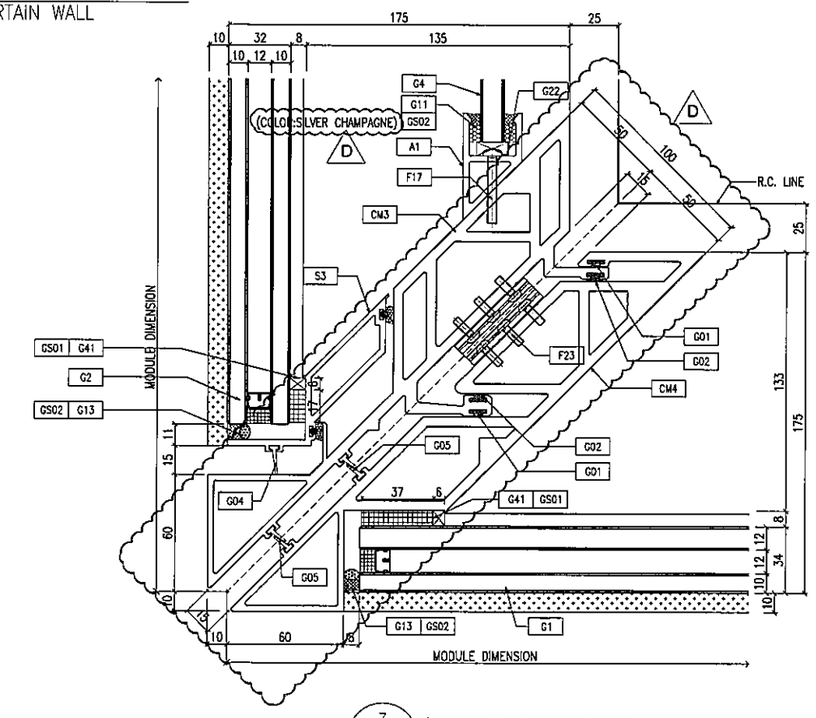

3 / D04 TYPICAL MULLION DETAIL CURTAIN WALL OUTSIDE

B.D. REF :

CLIENT :
信和置業有限公司
Sino Land Company Limited

ARCHITECT :
ronald lu & partners
Architects Planners Interior Designers
Ronald Lu & Partners (HK) Ltd.
呂元祥建築師事務所(香港)有限公司

MAIN CONTRACTOR :
Gammon

STRUCTURAL ENGINEER :
AECOM

FACADE CONSULTANT:
AECOM

NOTE :
1. ALL DIMENSIONS ARE IN mm.
2. ALL ELEVATIONS ARE VIEWED FROM OUTSIDE.
3. ALL DIMENSIONS TO BE VERIFIED ON SITE BEFORE FABRICATION.

LEGEND :
- X1 / X001 — DETAIL MARK NO. / REFER SHEET NO.
1. F.F.L. --FINISHED FLOOR LEVEL
2. S.F.L. --STRUCTURAL FLOOR LEVEL
3. /R --REVERSED DETAIL

NO.	DATE	REMARK	BY
D	25/05/22	REVISED AS PER COMMENTS	LS
C	07/04/22	REVISED AS PER COMMENTS	LS
B	25/01/22	REVISED AS PER COMMENTS	LS
A	23/12/21	REVISED AS PER COMMENTS	LS

JOB NO. : J-858

PROJECT :
PROPOSED RESIDENTIAL DEVELOPMENT
AT TKOTL 70RP, PHASE 11, LOHAS PARK
TSEUNG KWAN O, N.T.

TITLE :
TYPICAL MULLION DETAIL
FOR CURTAIN WALL

DATE : 22-OCT-21 | SCALE : 1:1.5(A1)

DRAWN BY : | CHECKED BY :

美特鋁質有限公司
MIDI ALUMINUM FABRICATOR LTD.
Units 6-8, Sunray Industrial Centre, 1/F
610 Cha Kwo Ling Road, Kowloon
Tel:23489211-4 Fax:(852)27727666

DWG NO. : J858-CW-D04 | REV. : D

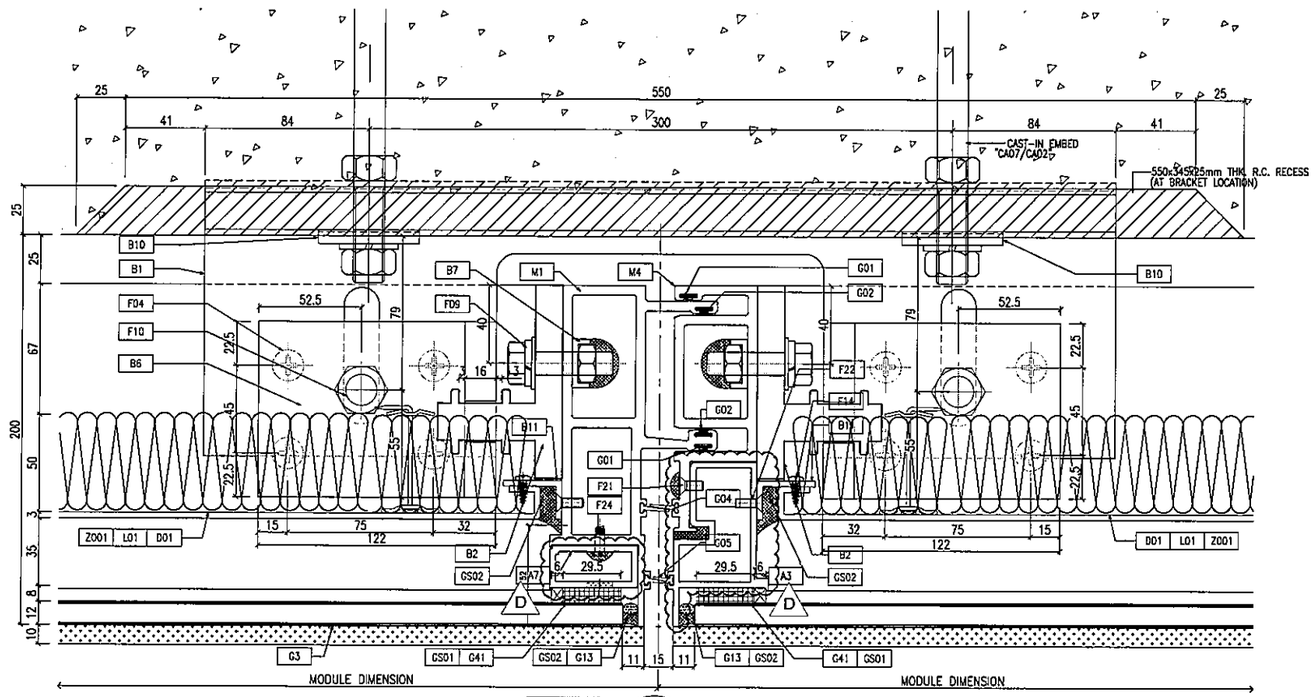

1 / D05 TYPICAL MULLION DETAIL CURTAIN WALL

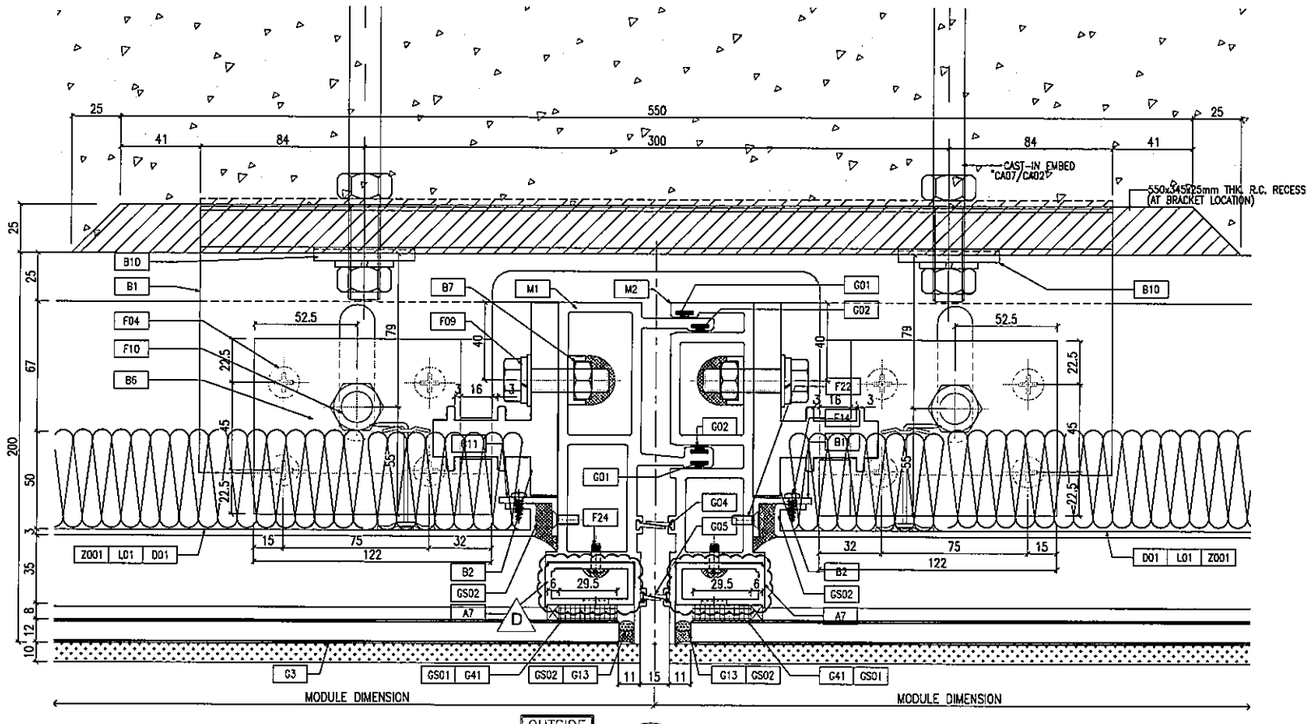

2 / D05 TYPICAL MULLION DETAIL CURTAIN WALL

B.D. REF :

CLIENT :
信和置業有限公司
Sino Land Company Limited

ARCHITECT :
ronald lu & partners
Architects · Planners · Interior Designers
Ronald Lu & Partners (HK) Ltd.
呂元祥建築師事務所(香港)有限公司

MAIN CONTRACTOR :
Gammon

STRUCTURAL ENGINEER :
AECOM

FACADE CONSULTANT:
AECOM

NOTE :
1. ALL DIMENSIONS ARE IN mm.
2. ALL ELEVATIONS ARE VIEWED FROM OUTSIDE.
3. ALL DIMENSIONS TO BE VERIFIED ON SITE BEFORE FABRICATION.

LEGEND :
- X1 / XD01 — DETAIL MARK NO. / REFER SHEET NO.
1. F.F.L. --FINISHED FLOOR LEVEL
2. S.F.L. --STRUCTURAL FLOOR LEVEL
3. (/R) --REVERSED DETAIL

NO.	DATE	REVISED	BY
D	25/05/22	REVISED AS PER COMMENTS	LS
C	07/04/22	REVISED AS PER COMMENTS	LS
B	25/01/22	REVISED AS PER COMMENTS	LS
A	23/12/21	REVISED AS PER COMMENTS	LS

JOB NO. : J-858

PROJECT :
PROPOSED RESIDENTIAL DEVELOPMENT
AT TKOTL 70RP, PHASE 11, LOHAS PARK
TSEUNG KWAN O, N.T.

TITLE :
TYPICAL MULLION DETAIL
FOR CURTAIN WALL

DATE : 22-OCT-21 | SCALE : 1:1.5(A1)

DRAWN BY : | CHECKED BY :

美特鋁質有限公司
MIDI ALUMINIUM FABRICATOR LTD.
Units 6-8, Sunray Industrial Centre, 1/F
610 Cha Kwo Ling Road, Kowloon
Tel:23489211-4 Fax:(852)27727666

DWG NO. : J858-CW-D05 | REV. : D

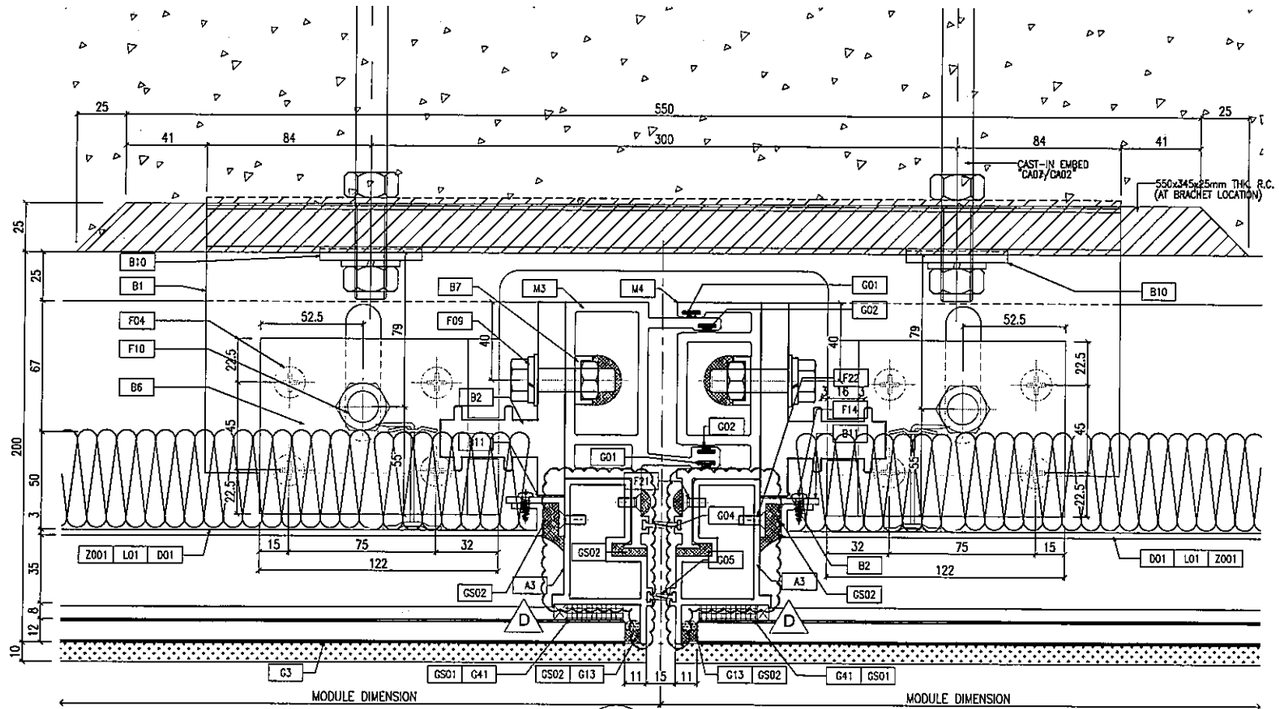

1 D06 TYPICAL MULLION DETAIL CURTAIN WALL

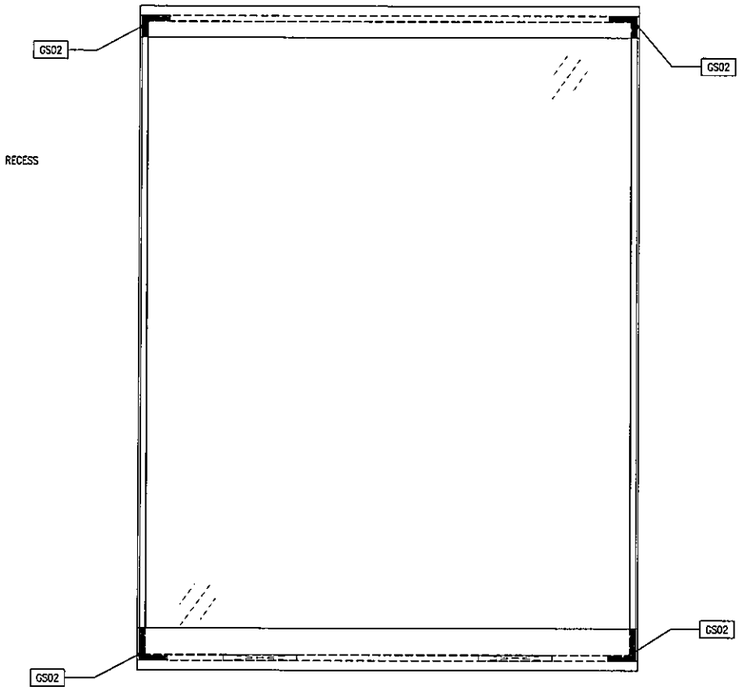

3 D06 TYPICAL MULLION DETAIL CURTAIN WALL (SCALE 1:4)

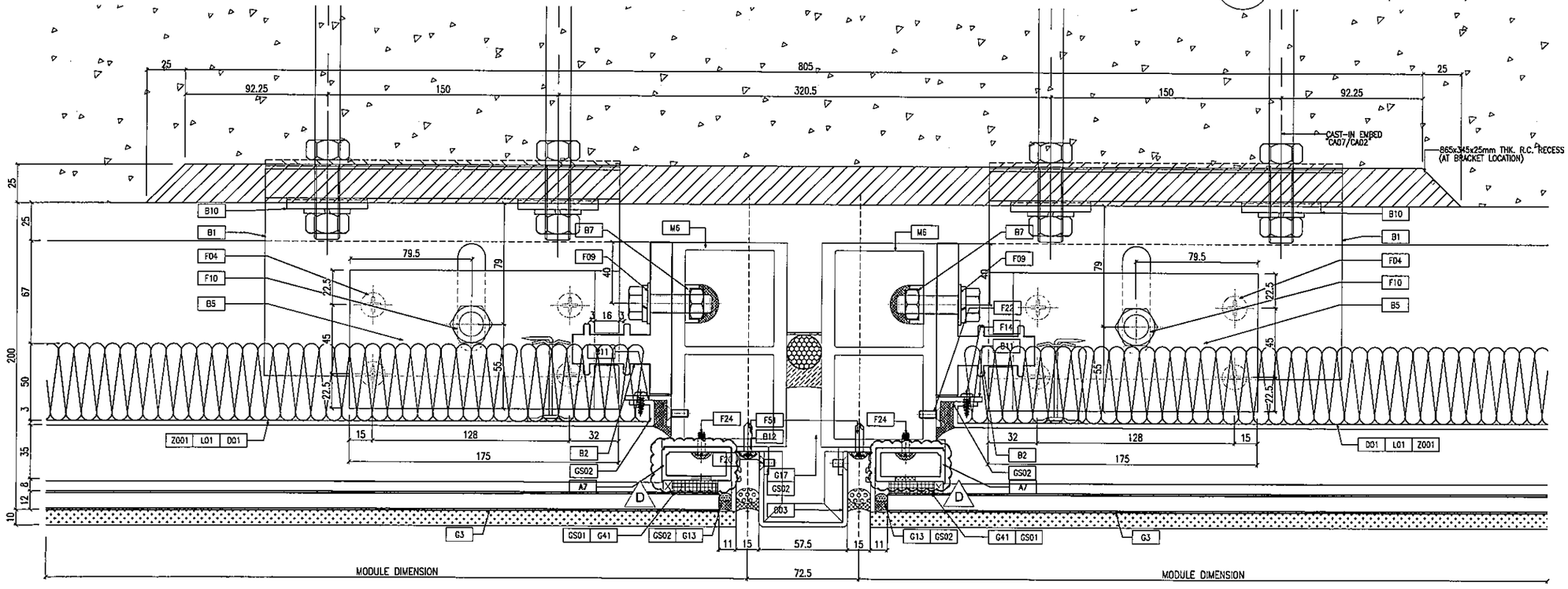

2 D06 TYPICAL MULLION DETAIL CURTAIN WALL

B.D. REF :

CLIENT :
信和置業有限公司
Sino Land Company Limited

ARCHITECT :
ronald lu & partners
Architects . Planners . Interior Designers
Ronald Lu & Partners (HK) Ltd.
呂元祥建築師事務所(香港)有限公司

MAIN CONTRACTOR :
Gammon

STRUCTURAL ENGINEER :
AECOM

FACADE CONSULTANT:
AECOM

NOTE :
1. ALL DIMENSIONS ARE IN mm.
2. ALL ELEVATIONS ARE VIEWED FROM OUTSIDE.
3. ALL DIMENSIONS TO BE VERIFIED ON SITE BEFORE FABRICATION.

LEGEND :
X1 — DETAIL MARK NO.
X001 — REFER SHEET NO.
1. F.F.L. --FINISHED FLOOR LEVEL
2. S.F.L. --STRUCTURAL FLOOR LEVEL
3. (/R) --REVERSED DETAIL

NO.	DATE	REVISED	BY
D	25/05/22	REVISED AS PER COMMENTS	LS
C	07/04/22	REVISED AS PER COMMENTS	LS
B	25/01/22	REVISED AS PER COMMENTS	LS
A	23/12/21	REVISED AS PER COMMENTS	LS

JOB NO. : J-858

PROJECT :
PROPOSED RESIDENTIAL DEVELOPMENT
AT TKOTL 70RP, PHASE 11, LOHAS PARK
TSEUNG KWAN O, N.T.

TITLE :
TYPICAL MULLION DETAIL
FOR CURTAIN WALL

DATE : 22-OCT-21 | SCALE : 1:1.5(A1)

DRAWN BY : | CHECKED BY :

美特鋁質有限公司
MIDI ALUMINIUM FABRICATOR LTD.
Units 6-8, Sunray Industrial Centre, 1/F
610 Cha Kwo Ling Road, Kowloon
Tel:23489211-4 Fax:(852)27727666

DWG NO. : J858-CW-D06 | REV. : D

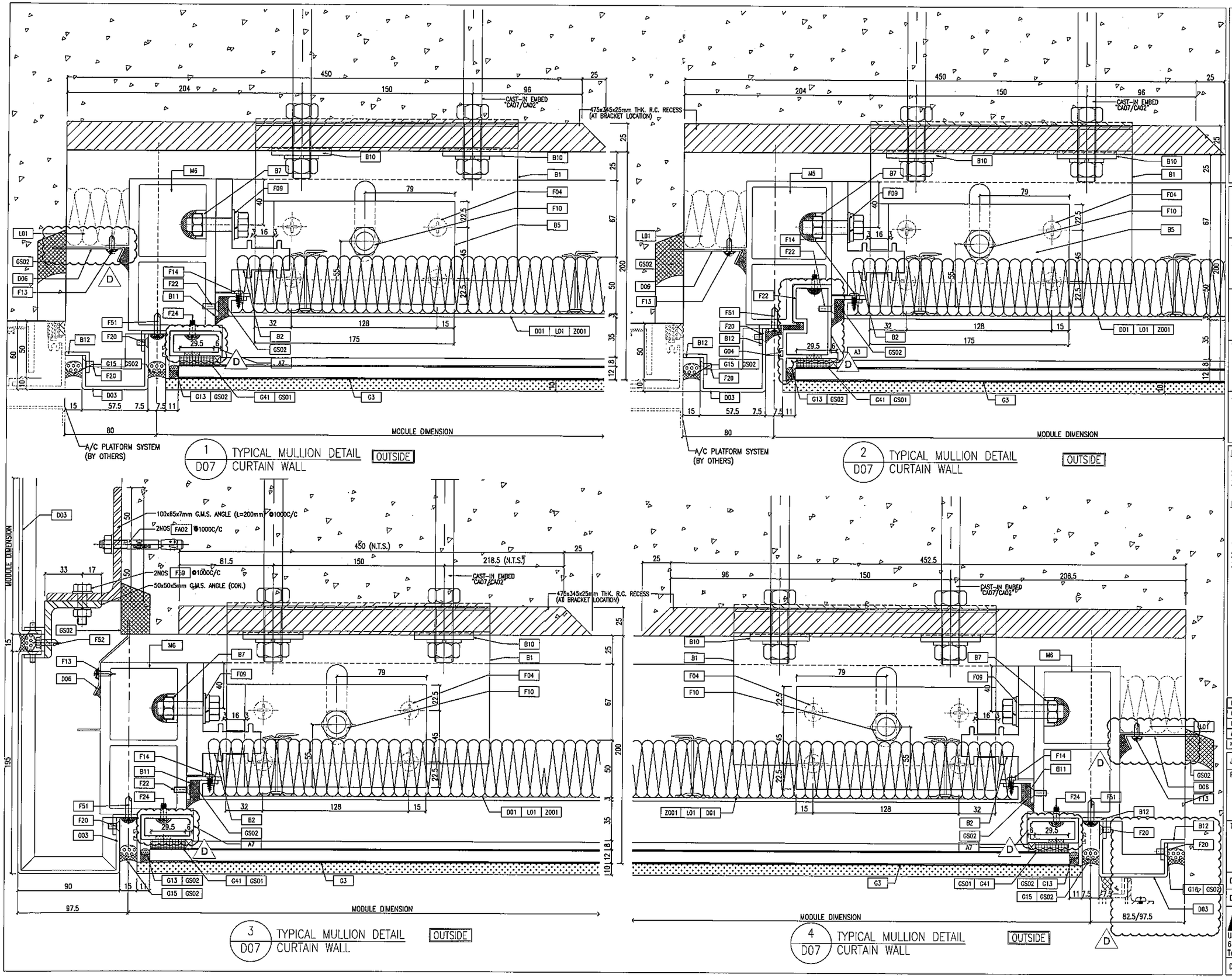

B.D. REF :

CLIENT :
信和置業有限公司
Sino Land Company Limited

ARCHITECT :
ronald lu & partners
Architects . Planners . Interior Designers
Ronald Lu & Partners (HK) Ltd.
呂元祥建築師事務所(香港)有限公司

MAIN CONTRACTOR :
Gammon

STRUCTURAL ENGINEER :
AECOM

FACADE CONSULTANT:
AECOM

NOTE :
1. ALL DIMENSIONS ARE IN mm.
2. ALL ELEVATIONS ARE VIEWED FROM OUTSIDE.
3. ALL DIMENSIONS TO BE VERIFIED ON SITE BEFORE FABRICATION.

LEGEND :
X1 — DETAIL MARK NO.
X001 — REFER SHEET NO.

1. F.F.L. --FINISHED FLOOR LEVEL
2. S.F.L. --STRUCTURAL FLOOR LEVEL
3. /R --REVERSED DETAIL

NO.	DATE	REVISED	BY
D	25/05/22	REVISED AS PER COMMENTS	LS
C	07/04/22	REVISED AS PER COMMENTS	LS
B	25/01/22	REVISED AS PER COMMENTS	LS
A	23/12/21	REVISED AS PER COMMENTS	LS

JOB NO. : J-858

PROJECT :
PROPOSED RESIDENTIAL DEVELOPMENT
AT TKOTL 70RP, PHASE 11, LOHAS PARK
TSEUNG KWAN O, N.T.

TITLE :
TYPICAL MULLION DETAIL
FOR CURTAIN WALL

DATE : 22-OCT-21 | SCALE : 1:1.5(A1)

DRAWN BY : | CHECKED BY :

美特鋁質有限公司
MIDI ALUMINUM FABRICATOR LTD.
Units 6-8, Sunray Industrial Centre, 1/F
610 Cha Kwo Ling Road, Kowloon
Tel:23489211-4 Fax:(852)27727666

DWG NO. : J858-CW-D07 | REV. : D

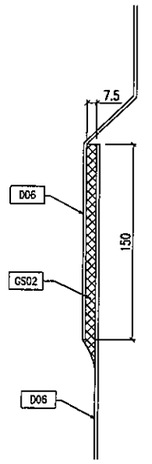

A / D08 SECTION A-A

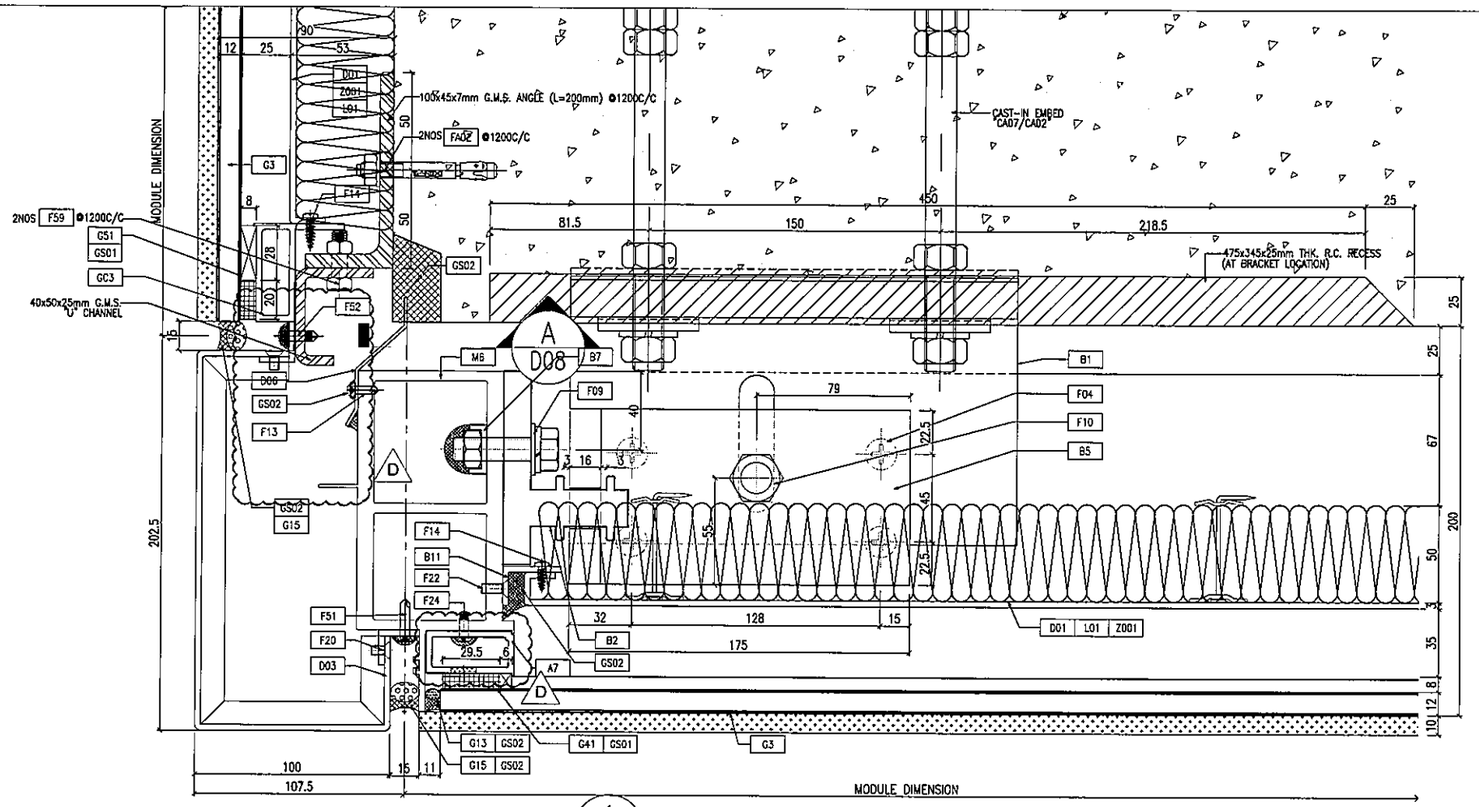

1 / D08 TYPICAL MULLION DETAIL CURTAIN WALL OUTSIDE

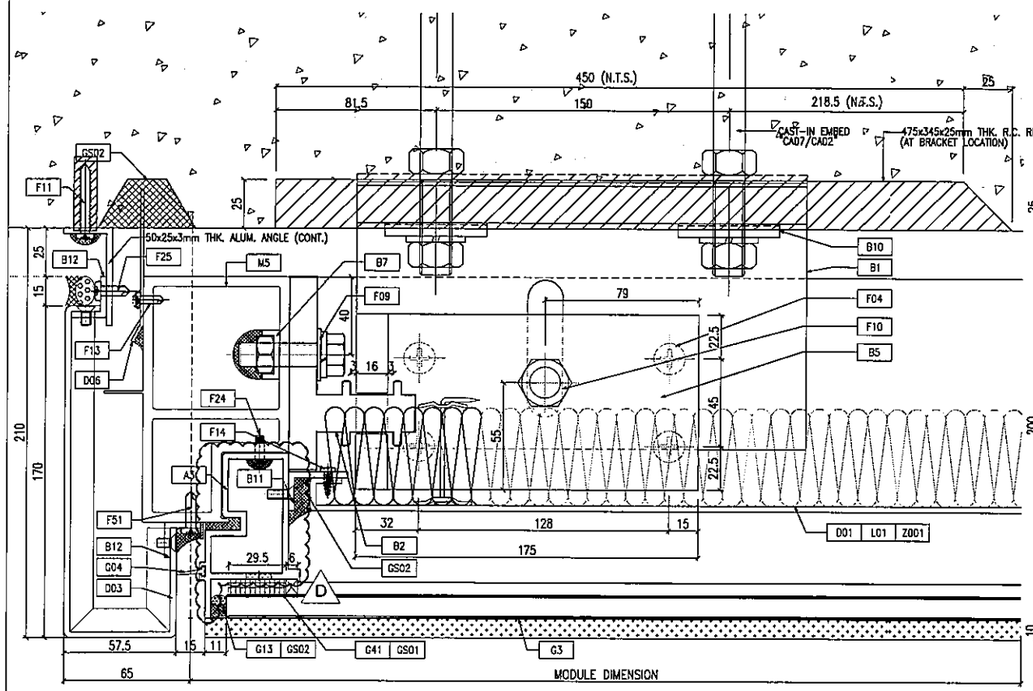

2 / D08 TYPICAL MULLION DETAIL CURTAIN WALL OUTSIDE

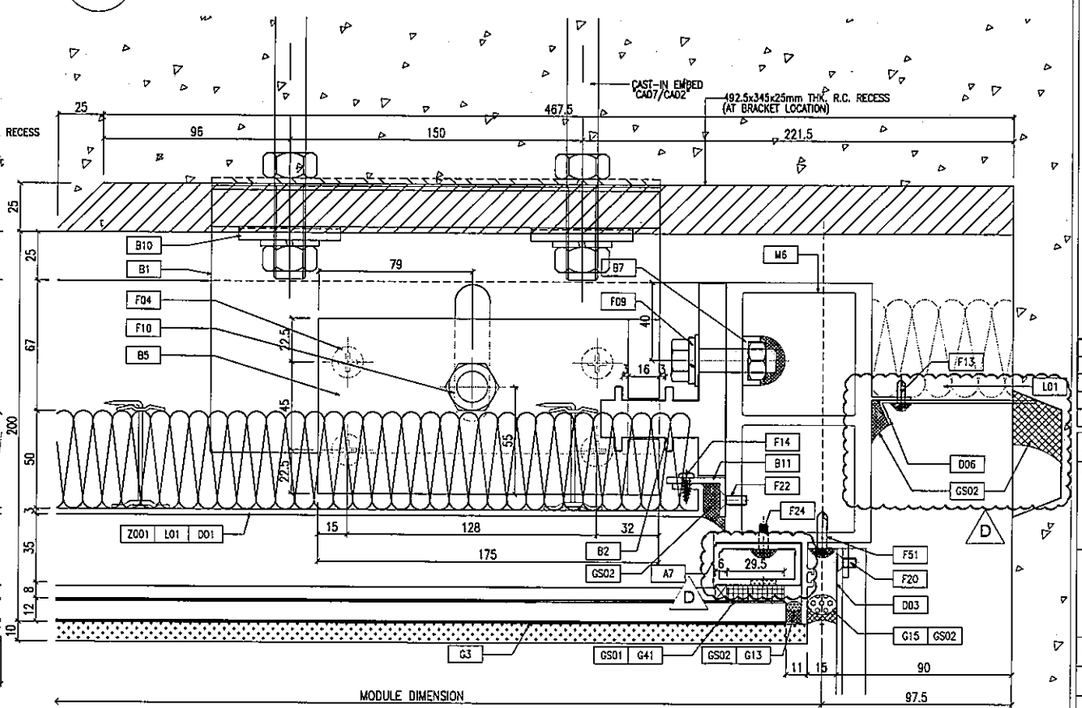

3 / D08 TYPICAL MULLION DETAIL CURTAIN WALL OUTSIDE

B.D. REF :

CLIENT :
信和置業有限公司
Sino Land Company Limited

ARCHITECT :
ronald lu & partners
Architects . Planners . Interior Designers
Ronald Lu & Partners (HK) Ltd.
呂元祥建築師事務所(香港)有限公司

MAIN CONTRACTOR :
Gammon

STRUCTURAL ENGINEER :
AECOM

FACADE CONSULTANT:
AECOM

NOTE :
1. ALL DIMENSIONS ARE IN mm.
2. ALL ELEVATIONS ARE VIEWED FROM OUTSIDE.
3. ALL DIMENSIONS TO BE VERIFIED ON SITE BEFORE FABRICATION.

LEGEND :
X1 / K001 — DETAIL MARK NO. / REFER SHEET NO.
1. F.F.L. -- FINISHED FLOOR LEVEL
2. S.F.L. -- STRUCTURAL FLOOR LEVEL
3. (R) -- REVERSED DETAIL

NO.	DATE	REVISED	BY
D	24/05/22	REVISED AS PER COMMENTS	LS
C	07/04/22	REVISED AS PER COMMENTS	LS
B	25/01/22	REVISED AS PER COMMENTS	LS
A	23/12/21	REVISED AS PER COMMENTS	LS

JOB NO. : J-858

PROJECT :
PROPOSED RESIDENTIAL DEVELOPMENT
AT TKOTL 70RP, PHASE 11, LOHAS PARK
TSEUNG KWAN O, N.T.

TITLE :
TYPICAL MULLION DETAIL
FOR CURTAIN WALL

DATE : 22-OCT-21 | SCALE : 1:1.5(A1)

DRAWN BY : | CHECKED BY :

美特鋁質有限公司
MIDI ALUMINIUM FABRICATOR LTD.
Units 6-8, Sunray Industrial Centre, 1/F
610 Cha Kwo Ling Road, Kowloon
Tel:23489211-4 Fax:(852)27727666

DWG NO. : J858-CW-D08 | REV. : D

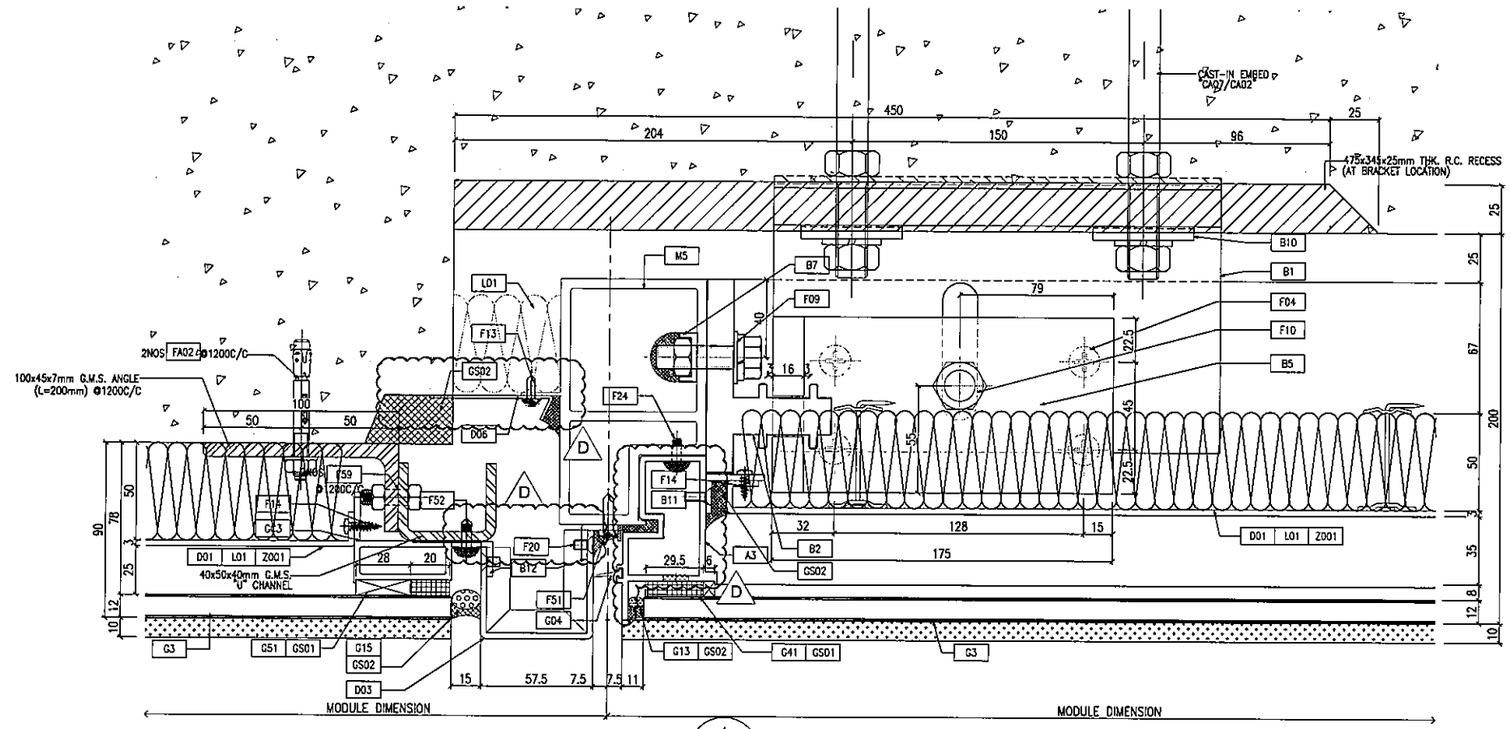

1 / D09 TYPICAL MULLION DETAIL CURTAIN WALL OUTSIDE

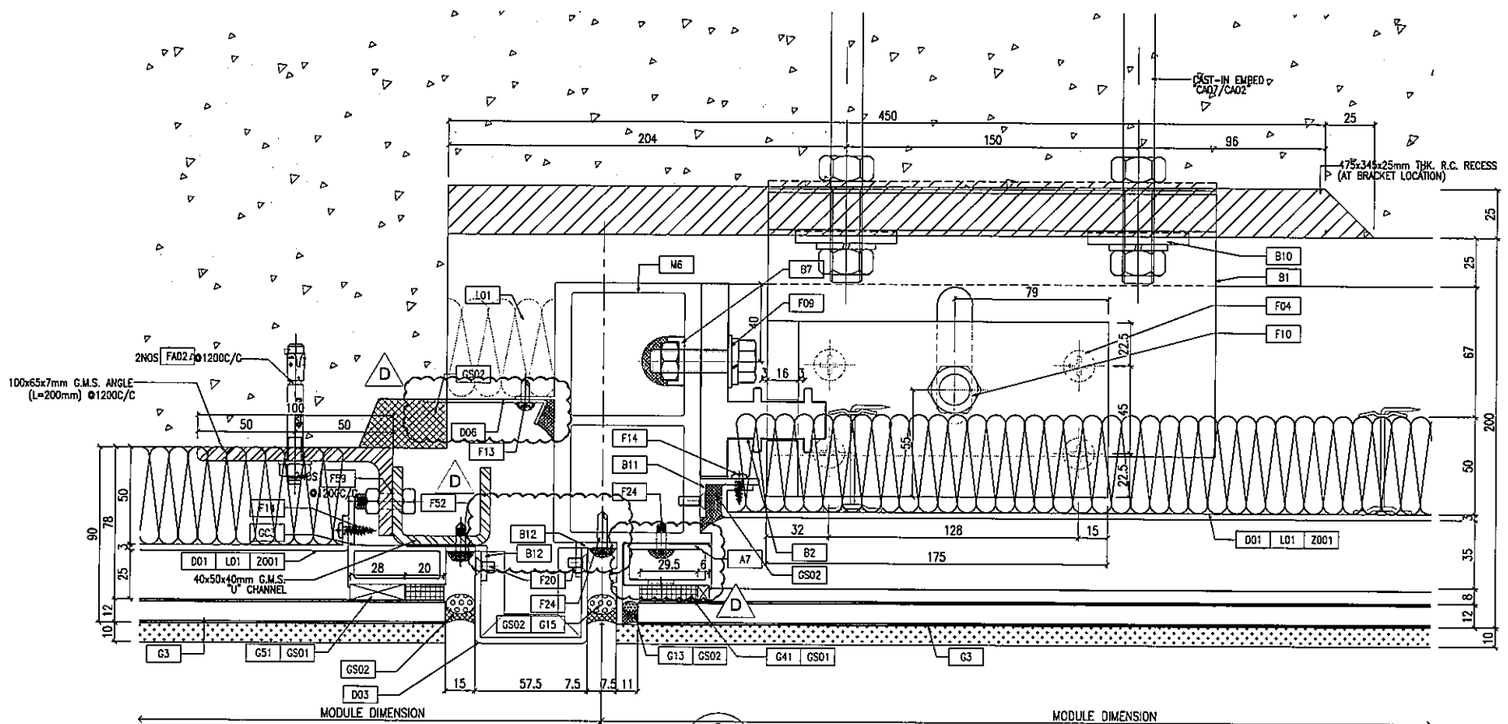

2 / D09 TYPICAL MULLION DETAIL CURTAIN WALL OUTSIDE

B.D. REF :

CLIENT :
信和置業有限公司
Sino Land Company Limited

ARCHITECT :
ronald lu & partners
Architects . Planners . Interior Designers
Ronald Lu & Partners (HK) Ltd.
呂元祥建築師事務所(香港)有限公司

MAIN CONTRACTOR :
Gammon

STRUCTURAL ENGINEER :
AECOM

FACADE CONSULTANT:
AECOM

NOTE :
1. ALL DIMENSIONS ARE IN mm.
2. ALL ELEVATIONS ARE VIEWED FROM OUTSIDE.
3. ALL DIMENSIONS TO BE VERIFIED ON SITE BEFORE FABRICATION.

LEGEND :
X1 — DETAIL MARK NO.
X001 — REFER SHEET NO.
1. F.F.L. -- FINISHED FLOOR LEVEL
2. S.F.L. -- STRUCTURAL FLOOR LEVEL
3. /R -- REVERSED DETAIL

NO.	DATE	REVISED	BY
D	25/05/22	REVISED AS PER COMMENTS	LS
C	07/04/22	REVISED AS PER COMMENTS	LS
B	25/01/22	REVISED AS PER COMMENTS	LS
A	23/12/21	REVISED AS PER COMMENTS	LS

JOB NO. : J-858

PROJECT :
PROPOSED RESIDENTIAL DEVELOPMENT
AT TKOTL 70RP, PHASE 11, LOHAS PARK
TSEUNG KWAN O, N.T.

TITLE :
TYPICAL MULLION DETAIL
FOR CURTAIN WALL

DATE : 22-OCT-21 | SCALE : 1:1.5(A1)

DRAWN BY : | CHECKED BY :

美特鋁質有限公司
MIDI ALUMINIUM FABRICATOR LTD.
Units 6-8, Sunray Industrial Centre, 1/F
610 Cha Kwo Ling Road, Kowloon
Tel:23489211-4 Fax:(852)27727666

DWG NO. : J858-CW-D09 | REV. : D

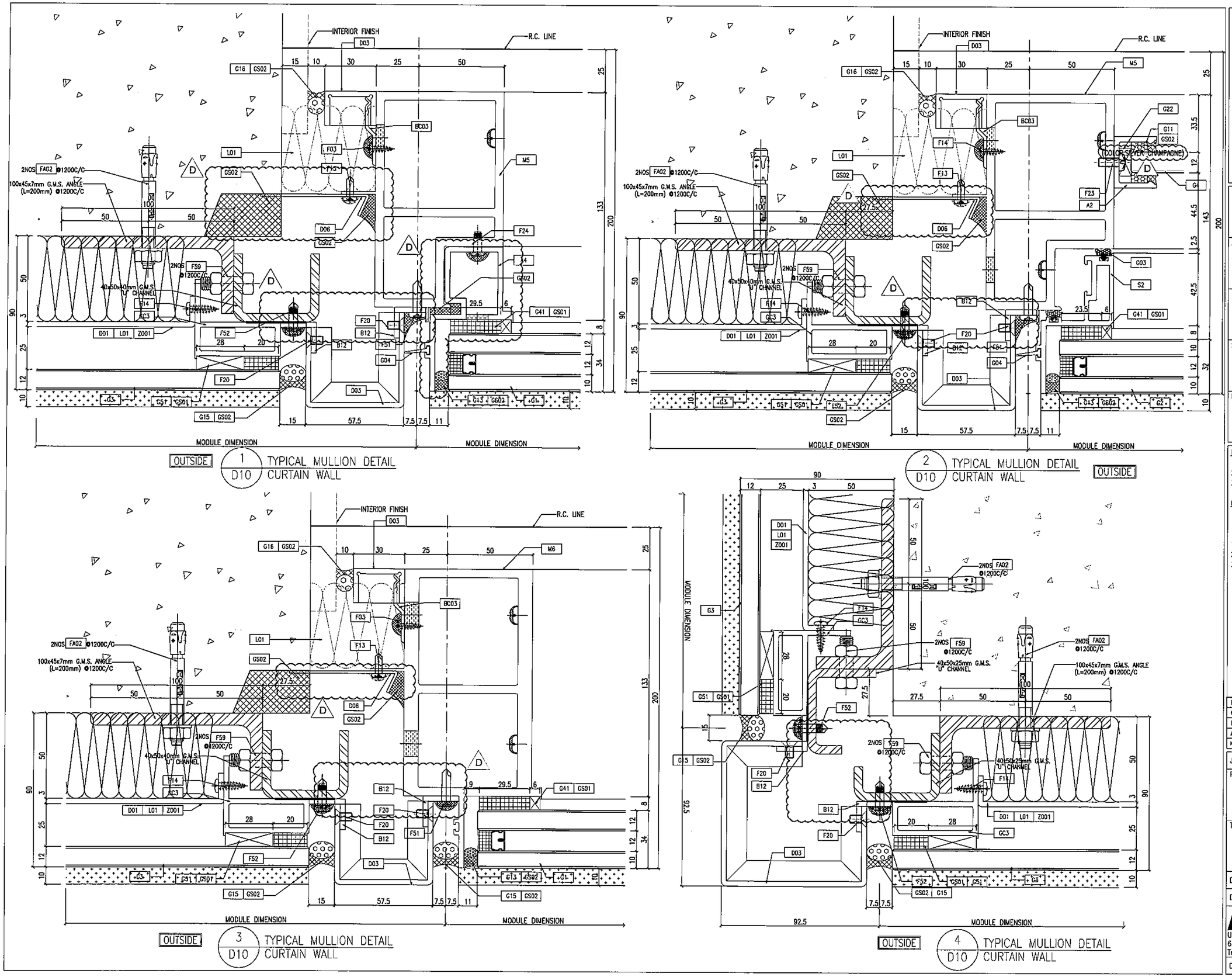

1 D10 TYPICAL MULLION DETAIL CURTAIN WALL

2 D10 TYPICAL MULLION DETAIL CURTAIN WALL

3 D10 TYPICAL MULLION DETAIL CURTAIN WALL

4 D10 TYPICAL MULLION DETAIL CURTAIN WALL

B.D. REF :

CLIENT :
信和置業有限公司
Sino Land Company Limited

ARCHITECT :
ronald lu & partners
Architects . Planners . Interior Designers
Ronald Lu & Partners (HK) Ltd.
呂元祥建築師事務所(香港)有限公司

MAIN CONTRACTOR :
Gammon

STRUCTURAL ENGINEER :
AECOM

FACADE CONSULTANT:
AECOM

NOTE :
1. ALL DIMENSIONS ARE IN mm.
2. ALL ELEVATIONS ARE VIEWED FROM OUTSIDE.
3. ALL DIMENSIONS TO BE VERIFIED ON SITE BEFORE FABRICATION.

LEGEND :
X1 — DETAIL MARK NO.
X001 — REFER SHEET NO.

1. F.F.L. --FINISHED FLOOR LEVEL
2. S.F.L. --STRUCTURAL FLOOR LEVEL
3. /R --REVERSED DETAIL

NO.	DATE	REVISED	BY
D	25/05/22	REVISED AS PER COMMENTS	LS
C	07/04/22	REVISED AS PER COMMENTS	LS
B	25/01/22	REVISED AS PER COMMENTS	LS
A	23/12/21	REVISED AS PER COMMENTS	LS

JOB NO. : J-858

PROJECT :
PROPOSED RESIDENTIAL DEVELOPMENT
AT TKOTL 70RP, PHASE 11, LOHAS PARK
TSEUNG KWAN O, N.T.

TITLE :
TYPICAL MULLION DETAIL
FOR CURTAIN WALL

DATE : 22-OCT-21 | SCALE : 1:1(A1)

DRAWN BY : | CHECKED BY :

美特鋁質有限公司
MIDI ALUMINIUM FABRICATOR LTD.
Units 6-8, Sunray Industrial Centre, 1/F
610 Cha Kwo Ling Road, Kowloon
Tel:23489211-4 Fax:(852)27727666

DWG NO. : J858-CW-D10 | REV. : D

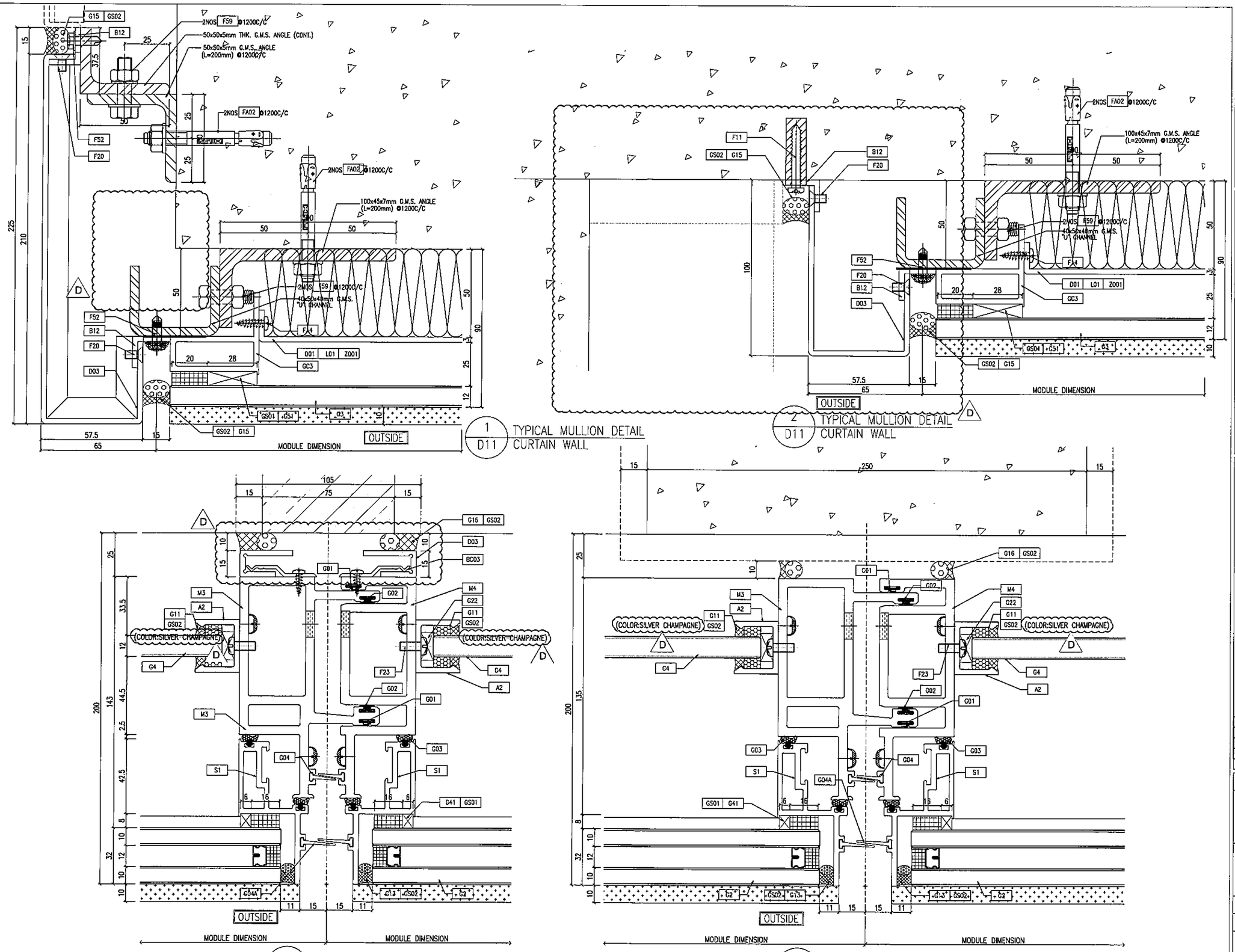

1 / D11 TYPICAL MULLION DETAIL CURTAIN WALL

2 / D11 TYPICAL MULLION DETAIL CURTAIN WALL

3 / D11 TYPICAL MULLION DETAIL CURTAIN WALL

4 / D11 TYPICAL MULLION DETAIL CURTAIN WALL

B.D. REF :

CLIENT :
信和置業有限公司
Sino Land Company Limited

ARCHITECT :
ronald lu & partners
Architects . Planners . Interior Designers
Ronald Lu & Partners (HK) Ltd.
呂元祥建築師事務所(香港)有限公司

MAIN CONTRACTOR :
Gammon

STRUCTURAL ENGINEER :
AECOM

FACADE CONSULTANT:
AECOM

NOTE :
1. ALL DIMENSIONS ARE IN mm.
2. ALL ELEVATIONS ARE VIEWED FROM OUTSIDE.
3. ALL DIMENSIONS TO BE VERIFIED ON SITE BEFORE FABRICATION.

LEGEND :
- X1 / XDD1 — DETAIL MARK NO. / REFER SHEET NO.
1. F.F.L. --FINISHED FLOOR LEVEL
2. S.F.L. --STRUCTURAL FLOOR LEVEL
3. /R --REVERSED DETAIL

NO.	DATE	REVISED	BY
D	25/05/22	REVISED AS PER COMMENTS	LS
C	07/04/22	REVISED AS PER COMMENTS	LS
B	25/01/22	REVISED AS PER COMMENTS	LS
A	23/12/21	REVISED AS PER COMMENTS	LS

JOB NO. : J-858

PROJECT :
PROPOSED RESIDENTIAL DEVELOPMENT
AT TKOTL 70RP, PHASE 11, LOHAS PARK
TSEUNG KWAN O, N.T.

TITLE :
TYPICAL MULLION DETAIL
FOR CURTAIN WALL

DATE : 22-OCT-21 | SCALE : 1:1(A1)

DRAWN BY : | CHECKED BY :

美特鋁質有限公司
MIDI ALUMINIUM FABRICATOR LTD.
Units 6-8, Sunray Industrial Centre, 1/F
610 Cha Kwo Ling Road, Kowloon
Tel:23489211-4 Fax:(852)27727666

DWG NO. : J858-CW-D11 | REV. : D

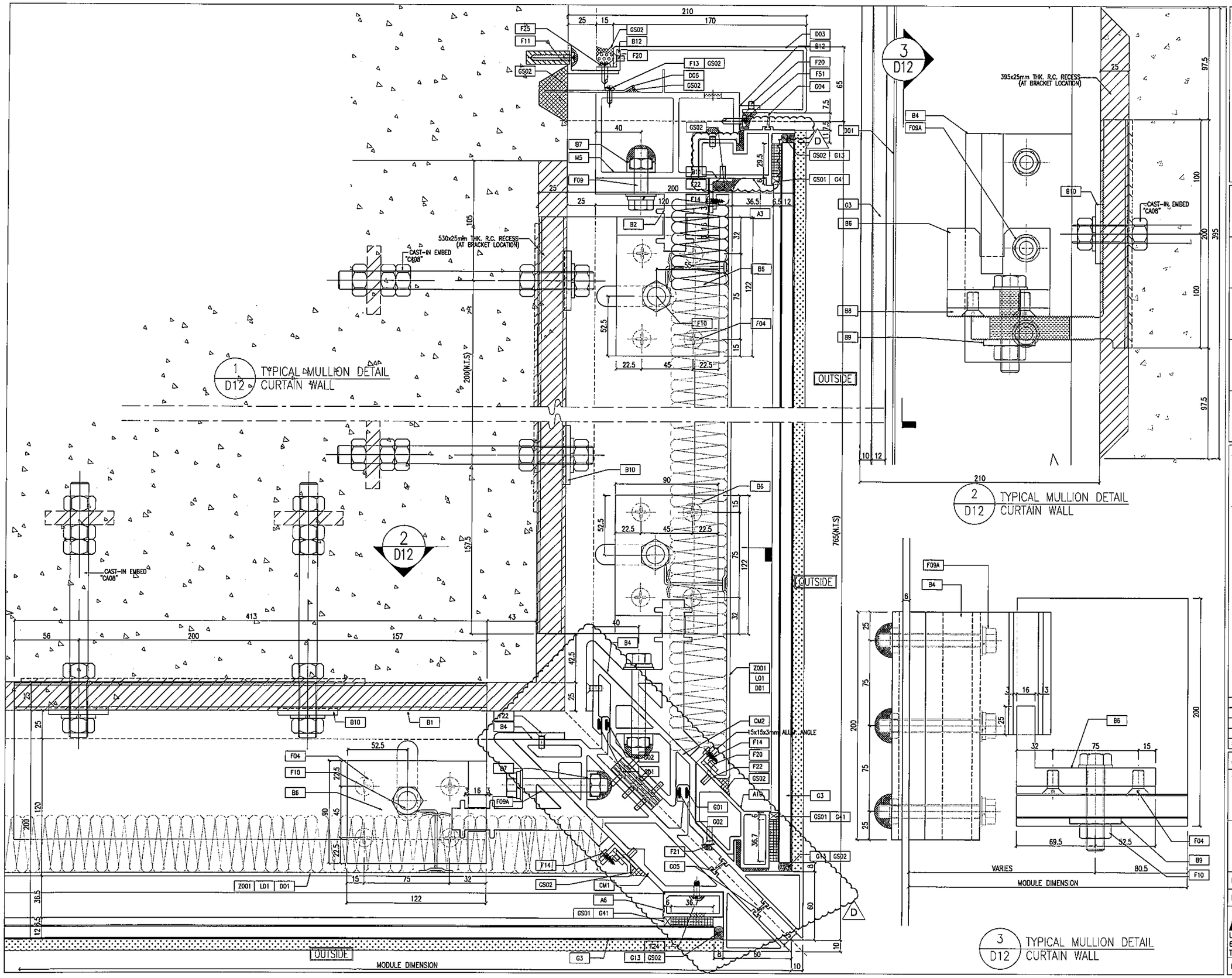

B.D. REF :

CLIENT :
信和置業有限公司
Sino Land Company Limited

ARCHITECT :
ronald lu & partners
Architects . Planners . Interior Designers
Ronald Lu & Partners (HK) Ltd.
呂元祥建築師事務所(香港)有限公司

MAIN CONTRACTOR :
Gammon

STRUCTURAL ENGINEER :
AECOM

FACADE CONSULTANT:
AECOM

NOTE :
1. ALL DIMENSIONS ARE IN mm.
2. ALL ELEVATIONS ARE VIEWED FROM OUTSIDE.
3. ALL DIMENSIONS TO BE VERIFIED ON SITE BEFORE FABRICATION.

LEGEND :
- x1 / x001 — DETAIL MARK NO. / REFER SHEET NO.
1. F.F.L. --FINISHED FLOOR LEVEL
2. S.F.L. --STRUCTURAL FLOOR LEVEL
3. /R --REVERSED DETAIL

NO.	DATE	REVISED	BY
D	25/05/22	REVISED AS PER COMMENTS	LS
C	07/04/22	REVISED AS PER COMMENTS	LS
B	25/01/22	REVISED AS PER COMMENTS	LS
A	23/12/21	REVISED AS PER COMMENTS	LS

JOB NO. : J-858

PROJECT :
PROPOSED RESIDENTIAL DEVELOPMENT
AT TKOTL 70RP, PHASE 11, LOHAS PARK
TSEUNG KWAN O, N.T.

TITLE :
TYPICAL MULLION DETAIL
FOR CURTAIN WALL

DATE : 22-OCT-21 | SCALE : 1:1.5(A1)

DRAWN BY : | CHECKED BY :

美特鋁質有限公司
MIDI ALUMINUM FABRICATOR LTD.
Units 6-8, Sunray Industrial Centre, 1/F
610 Cha Kwo Ling Road, Kowloon
Tel:23489211-4 Fax:(852)27727666

DWG NO. : J858-CW-D12 | REV. : D

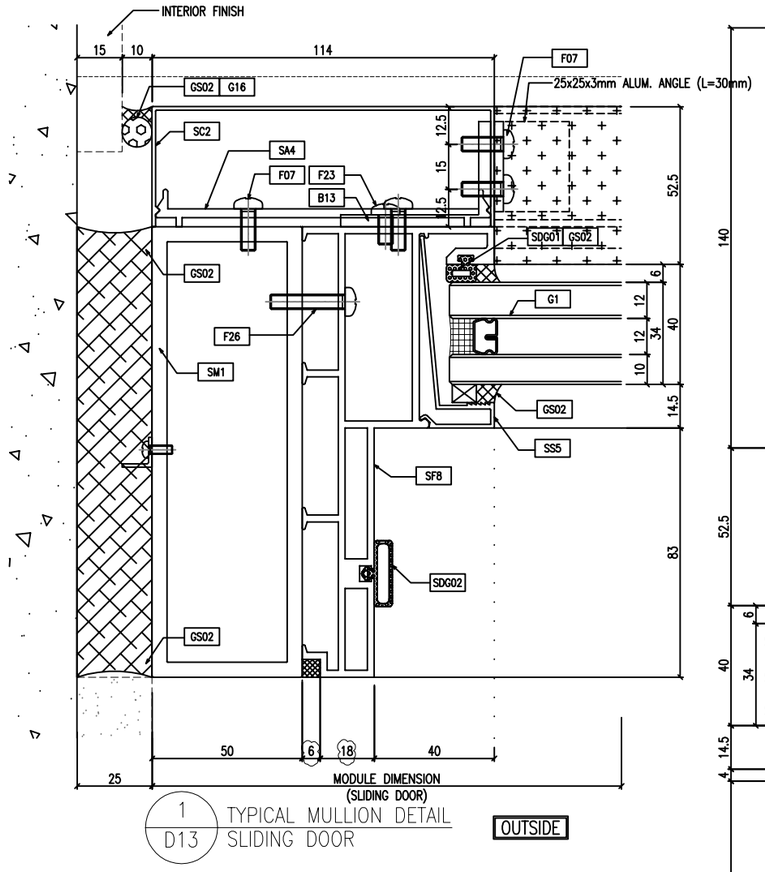

1 / D13 TYPICAL MULLION DETAIL SLIDING DOOR — OUTSIDE

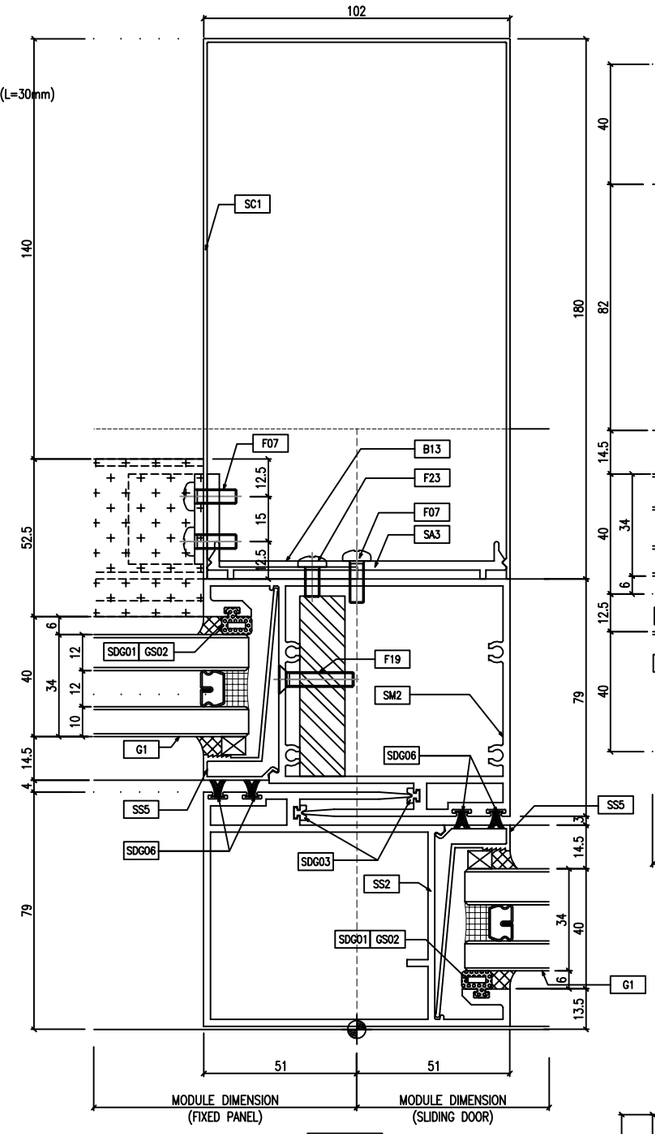

2 / D13 TYPICAL MULLION DETAIL SLIDING DOOR — OUTSIDE

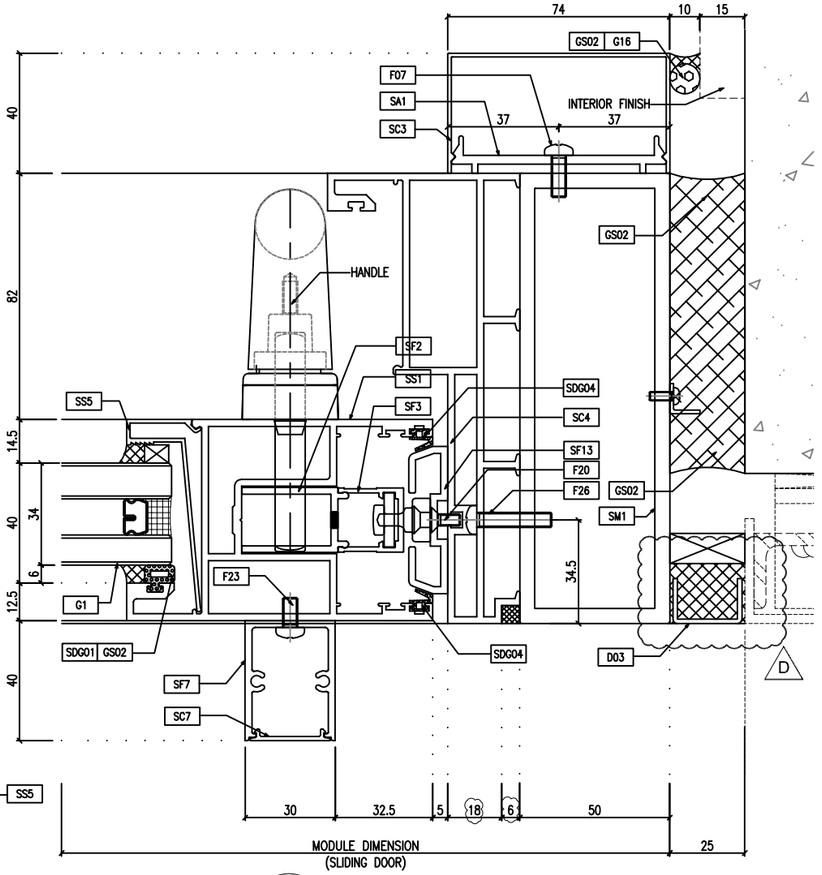

3 / D13 TYPICAL MULLION DETAIL SLIDING DOOR — OUTSIDE

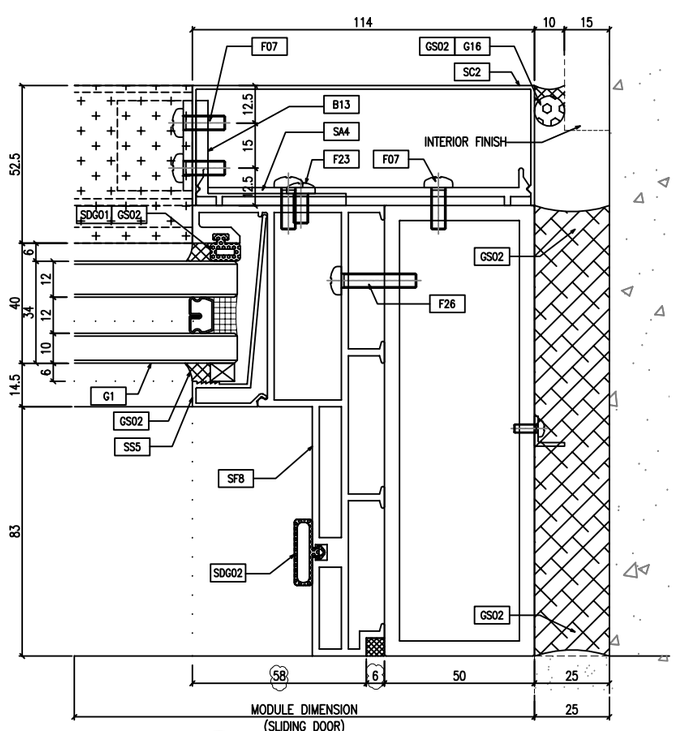

4 / D13 TYPICAL MULLION DETAIL SLIDING DOOR — OUTSIDE

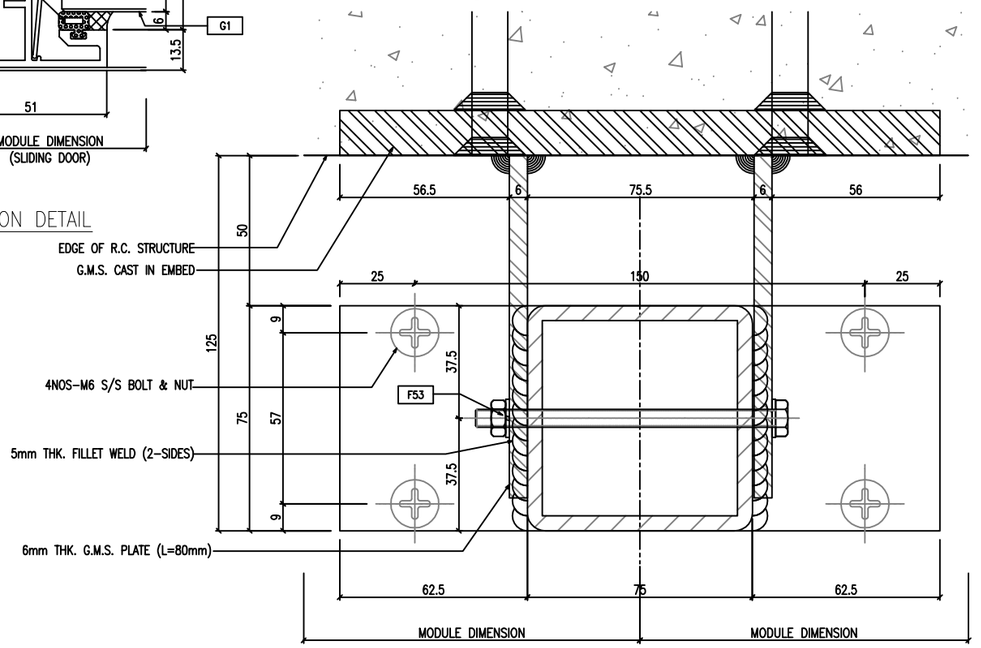

5 / D13 TYPICAL MULLION DETAIL SLIDING DOOR — OUTSIDE

B.D. REF :

CLIENT :
信和置業有限公司
Sino Land Company Limited

ARCHITECT :
ronald lu & partners
Architects . Planners . Interior Designers
Ronald Lu & Partners (HK) Ltd.
呂元祥建築師事務所(香港)有限公司

MAIN CONTRACTOR :
Gammon

STRUCTURAL ENGINEER :
AECOM

FACADE CONSULTANT:
AECOM

NOTE :
1. ALL DIMENSIONS ARE IN mm.
2. ALL ELEVATIONS ARE VIEWED FROM OUTSIDE.
3. ALL DIMENSIONS TO BE VERIFIED ON SITE BEFORE FABRICATION.

LEGEND :
X1 — DETAIL MARK NO.
X001 — REFER SHEET NO.
1. F.F.L. --FINISHED FLOOR LEVEL
2. S.F.L. --STRUCTURAL FLOOR LEVEL
3. /R --REVERSED DETAIL

NO.	DATE	REVISED	BY
D	25/05/22	REVISED AS PER COMMENTS	LS
C	07/04/22	REVISED AS PER COMMENTS	LS
B	25/01/22	REVISED AS PER COMMENTS	LS
A	23/12/21	REVISED AS PER COMMENTS	LS

JOB NO. : J-858

PROJECT :
PROPOSED RESIDENTIAL DEVELOPMENT
AT TKOTL 70RP, PHASE 11, LOHAS PARK
TSEUNG KWAN O, N.T.

TITLE :
TYPICAL MULLION DETAIL
FOR CURTAIN WALL

DATE : 22-OCT-21 | SCALE : 1:1(A1)

DRAWN BY : | CHECKED BY :

美特鋁質有限公司
MIDI ALUMINIUM FABRICATOR LTD.
Units 6-8, Sunray Industrial Centre, 1/F
610 Cha Kwo Ling Road, Kowloon
Tel:23489211-4 Fax:(852)27727666

DWG NO. : J858-CW-D13 | REV. : D

T:\Jobs\J-858\3 Dwg & Cal\Shop Drawings\Curtain Wall\6th\20220531\5月31\J858 CURTAIN WALL SHOP DRAWING(CAD)-20220531-TYPICAL & PENTHOUSE\J858 CW DETAIL.dwg

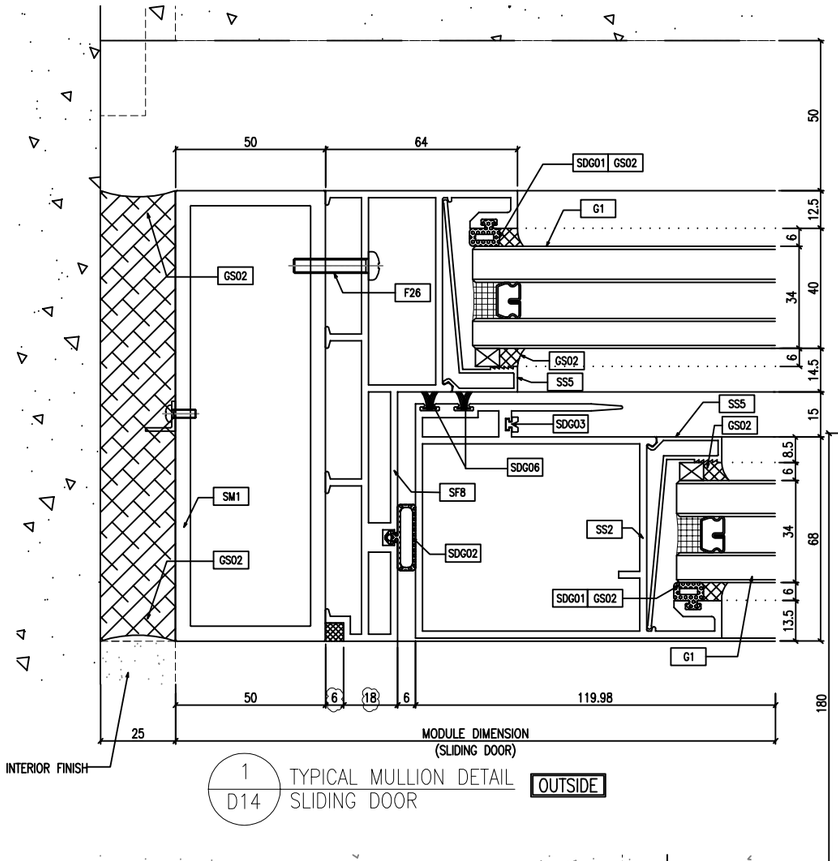

1 / D14 TYPICAL MULLION DETAIL SLIDING DOOR — OUTSIDE

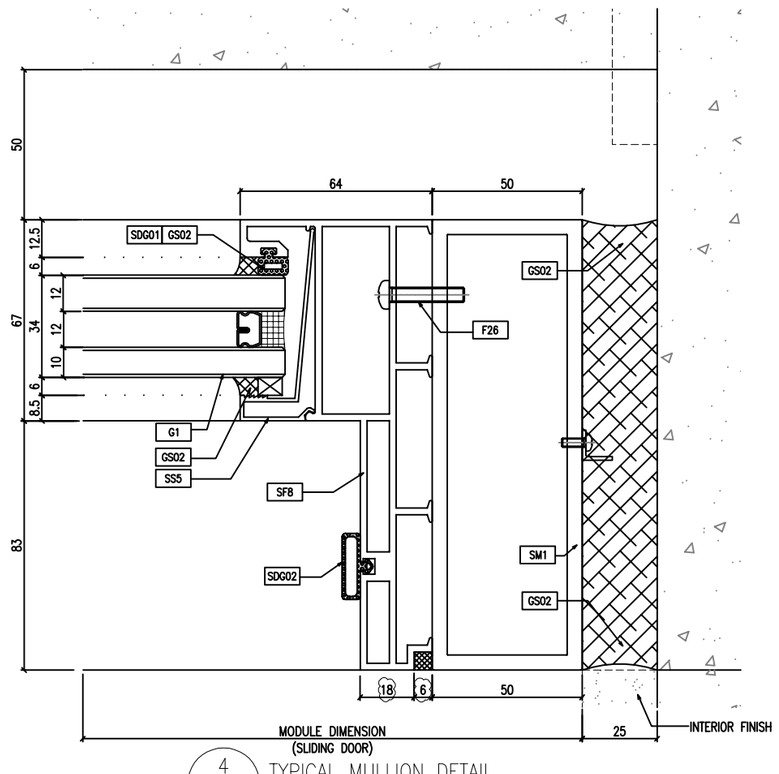

4 / D14 TYPICAL MULLION DETAIL SLIDING DOOR — OUTSIDE

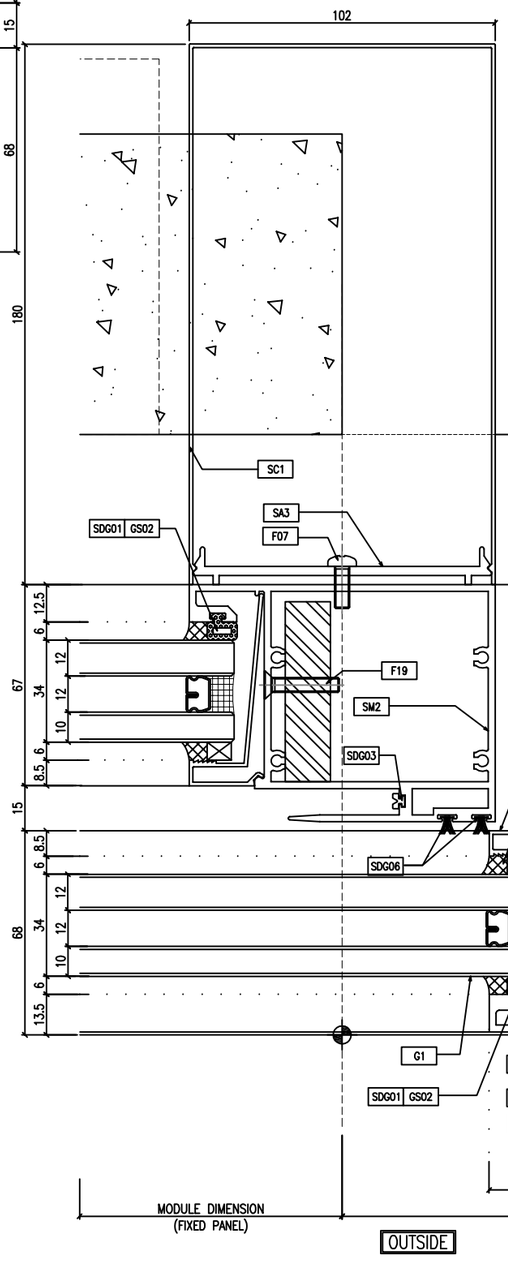

2 / D14 TYPICAL MULLION DETAIL SLIDING DOOR — OUTSIDE

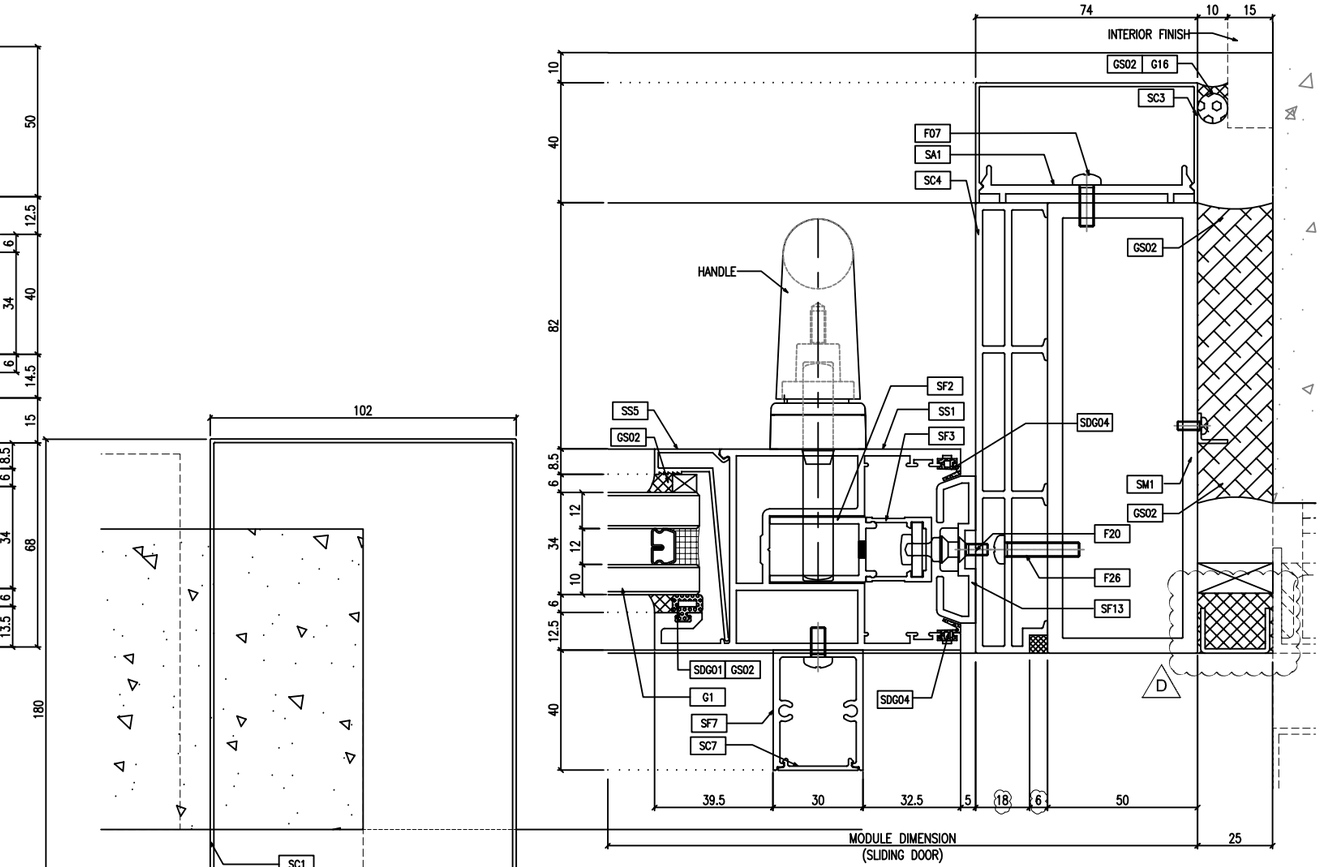

3 / D14 TYPICAL MULLION DETAIL SLIDING DOOR — OUTSIDE

B.D. REF :

CLIENT :
信和置業有限公司
Sino Land Company Limited

ARCHITECT :
ronald lu & partners
Architects . Planners . Interior Designers
Ronald Lu & Partners (HK) Ltd.
呂元祥建築師事務所(香港)有限公司

MAIN CONTRACTOR :
Gammon

STRUCTURAL ENGINEER :
AECOM

FACADE CONSULTANT:
AECOM

NOTE :
1. ALL DIMENSIONS ARE IN mm.
2. ALL ELEVATIONS ARE VIEWED FROM OUTSIDE.
3. ALL DIMENSIONS TO BE VERIFIED ON SITE BEFORE FABRICATION.

LEGEND :
X1 — DETAIL MARK NO.
X001 — REFER SHEET NO.
1. F.F.L. --FINISHED FLOOR LEVEL
2. S.F.L. --STRUCTURAL FLOOR LEVEL
3. /R --REVERSED DETAIL

NO.	DATE	REVISED	BY
D	25/05/22	REVISED AS PER COMMENTS	LS
C	07/04/22	REVISED AS PER COMMENTS	LS
B	25/01/22	REVISED AS PER COMMENTS	LS
A	23/12/21	REVISED AS PER COMMENTS	LS

JOB NO. : J-858

PROJECT :
PROPOSED RESIDENTIAL DEVELOPMENT
AT TKOTL 70RP, PHASE 11, LOHAS PARK
TSEUNG KWAN O, N.T.

TITLE :
TYPICAL MULLION DETAIL
FOR CURTAIN WALL

DATE : 22-OCT-21 | SCALE : 1:1(A1)

DRAWN BY : | CHECKED BY :

美特鋁質有限公司
MIDI ALUMINIUM FABRICATOR LTD.
Units 6-8, Sunray Industrial Centre, 1/F
610 Cha Kwo Ling Road, Kowloon
Tel:23489211-4 Fax:(852)27727666

DWG NO. : J858-CW-D14 | REV. : D

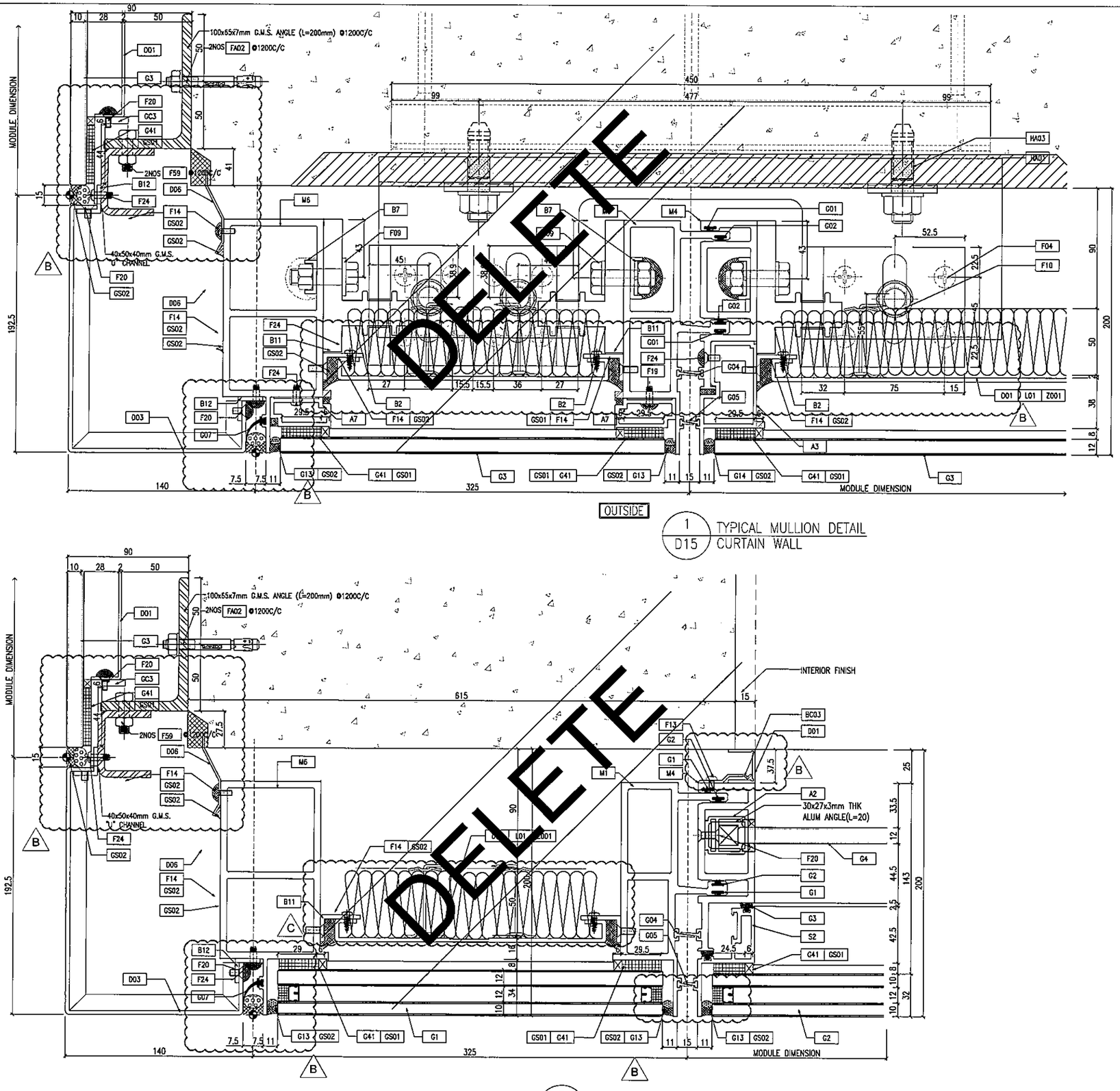

1 / D15 TYPICAL MULLION DETAIL CURTAIN WALL

2 / D15 TYPICAL MULLION DETAIL CURTAIN WALL

B.D. REF :

CLIENT :
信和置業有限公司
Sino Land Company Limited

ARCHITECT :
ronald lu & partners
Architects . Planners . Interior Designers
Ronald Lu & Partners (HK) Ltd.
呂元祥建築師事務所(香港)有限公司

MAIN CONTRACTOR :
Gammon

STRUCTURAL ENGINEER :
AECOM

FACADE CONSULTANT:
AECOM

NOTE :
1. ALL DIMENSIONS ARE IN mm.
2. ALL ELEVATIONS ARE VIEWED FROM OUTSIDE.
3. ALL DIMENSIONS TO BE VERIFIED ON SITE BEFORE FABRICATION.

LEGEND :
X1 — DETAIL MARK NO.
X001 — REFER SHEET NO.

1. F.F.L. --FINISHED FLOOR LEVEL
2. S.F.L. --STRUCTURAL FLOOR LEVEL
3. /R --REVERSED DETAIL

NO.	DATE	REVISED	BY
B	25/01/22	REVISED AS PER COMMENTS	LS
A	23/12/21	REVISED AS PER COMMENTS	LS

JOB NO. : J-858

PROJECT :
PROPOSED RESIDENTIAL DEVELOPMENT
AT TKOTL 70RP, PHASE 11, LOHAS PARK
TSEUNG KWAN O, N.T.

TITLE :
TYPICAL MULLION DETAIL
FOR CURTAIN WALL

DATE : 22-OCT-21 | SCALE : 1:1.5(A1)

DRAWN BY : | CHECKED BY :

美特鋁質有限公司
MIDI ALUMINIUM FABRICATOR LTD.
Units 6-8, Sunray Industrial Centre, 1/F
610 Cha Kwo Ling Road, Kowloon
Tel:23489211-4 Fax:(852)27727666

DWG NO. : J858-CW-D15 | REV. : B

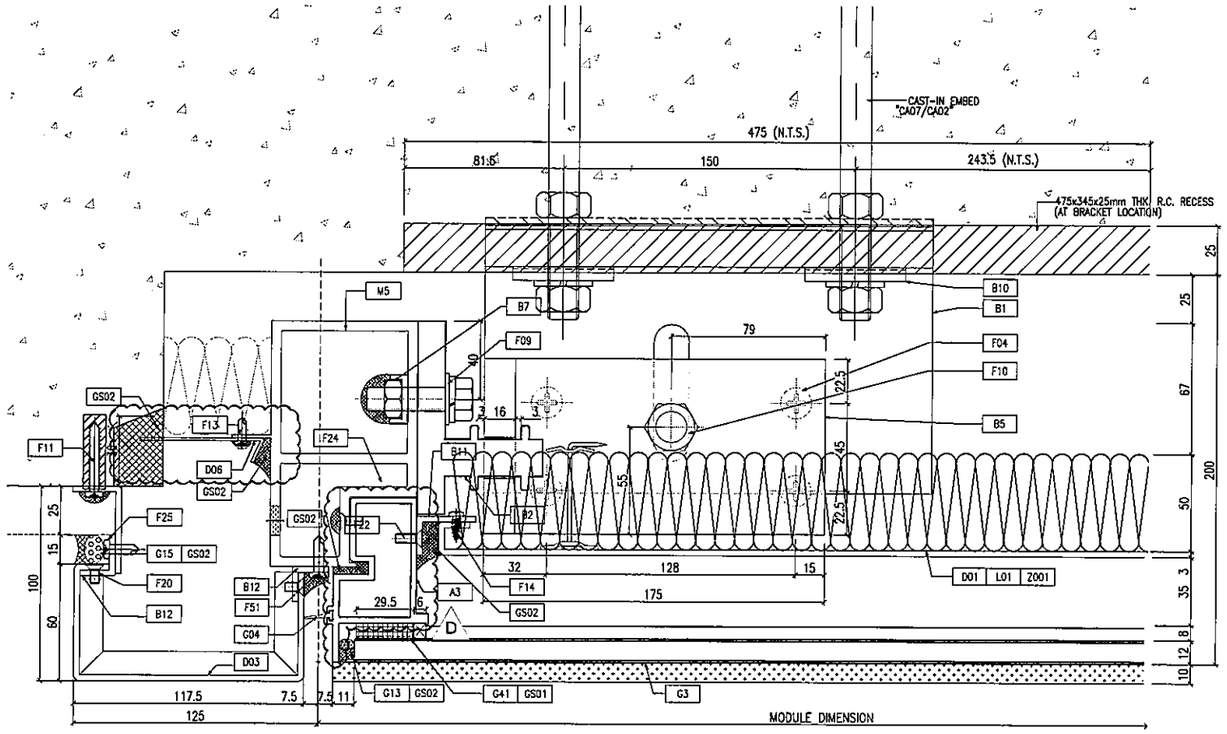

1 / D16 TYPICAL MULLION DETAIL CURTAIN WALL

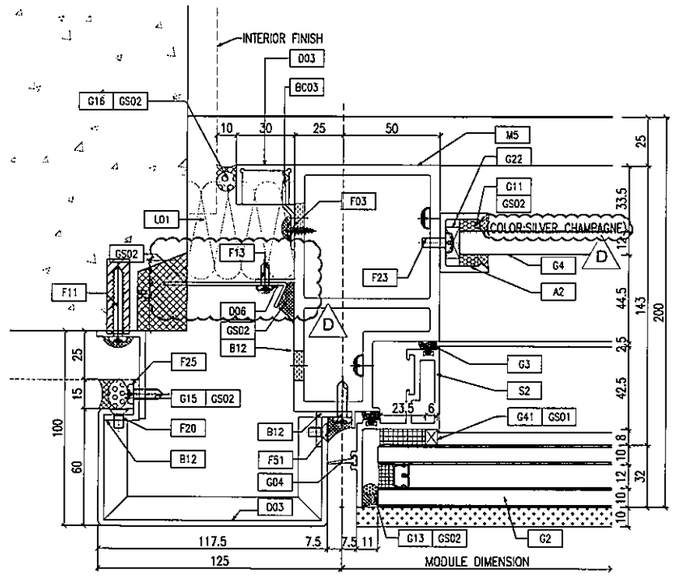

2 / D16 TYPICAL MULLION DETAIL CURTAIN WALL OUTSIDE

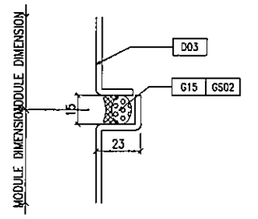

A / – TYPICAL MULLION DETAIL CURTAIN WALL

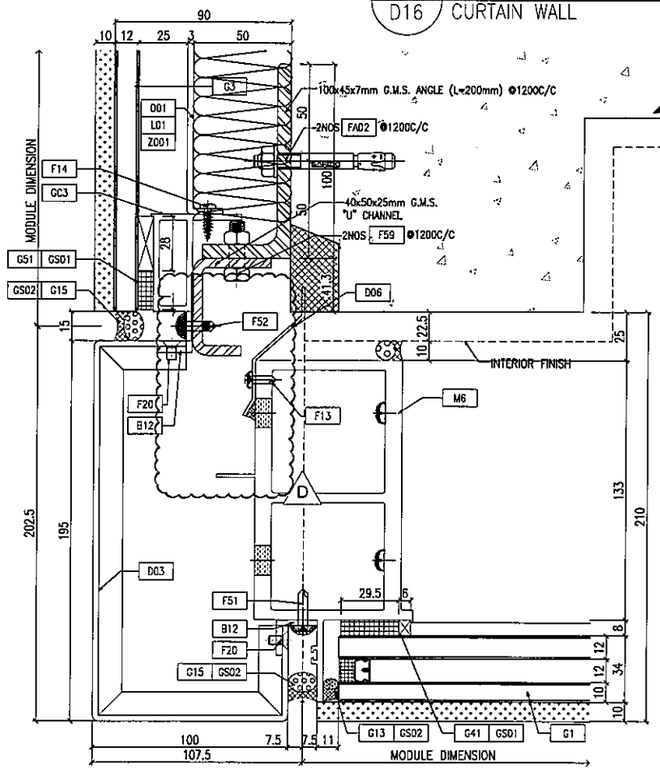

OUTSIDE 3 / D16 TYPICAL MULLION DETAIL CURTAIN WALL

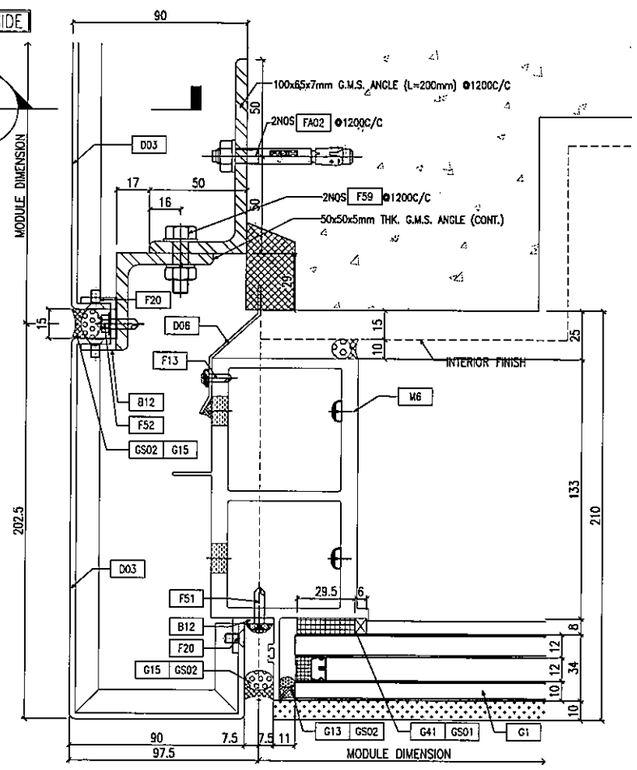

OUTSIDE 4 / D16 TYPICAL MULLION DETAIL CURTAIN WALL

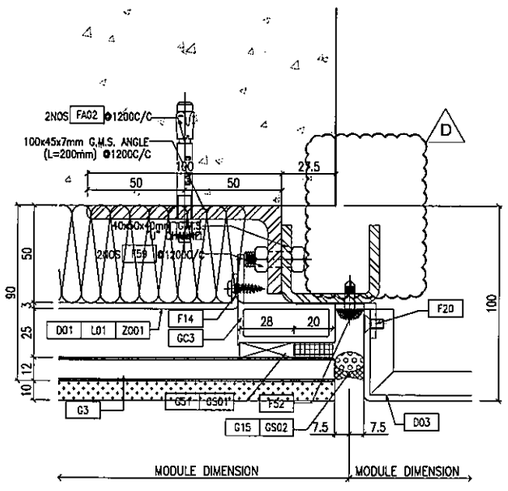

OUTSIDE 5 / D16 TYPICAL MULLION DETAIL CURTAIN WALL

B.D. REF :

CLIENT :
信和置業有限公司
Sino Land Company Limited

ARCHITECT :
ronald lu & partners
Architects · Planners · Interior Designers
Ronald Lu & Partners (HK) Ltd.
呂元祥建築師事務所(香港)有限公司

MAIN CONTRACTOR :
Gammon

STRUCTURAL ENGINEER :
AECOM

FACADE CONSULTANT:
AECOM

NOTE :
1. ALL DIMENSIONS ARE IN mm.
2. ALL ELEVATIONS ARE VIEWED FROM OUTSIDE.
3. ALL DIMENSIONS TO BE VERIFIED ON SITE BEFORE FABRICATION.

LEGEND :
X1 — DETAIL MARK NO.
X001 — REFER SHEET NO.

1. F.F.L. --FINISHED FLOOR LEVEL
2. S.F.L. --STRUCTURAL FLOOR LEVEL
3. (/R) --REVERSED DETAIL

NO.	DATE	REVISED	BY
D	25/05/22	REVISED AS PER COMMENTS	LS
C	07/04/22	REVISED AS PER COMMENTS	LS
B	25/01/22	REVISED AS PER COMMENTS	LS
A	23/12/21	REVISED AS PER COMMENTS	LS

JOB NO. : J-858

PROJECT :
PROPOSED RESIDENTIAL DEVELOPMENT
AT TKOTL 70RP, PHASE 11, LOHAS PARK
TSEUNG KWAN O, N.T.

TITLE :
TYPICAL MULLION DETAIL
FOR CURTAIN WALL

DATE : 22-OCT-21 | SCALE : 1:1.5(A1)

DRAWN BY : | CHECKED BY :

美特鋁質有限公司
MIDI ALUMINIUM FABRICATOR LTD.
Units 6-8, Sunray Industrial Centre, 1/F
610 Cha Kwo Ling Road, Kowloon
Tel:23489211-4 Fax:(852)27727666

DWG NO. : J858-CW-D16 | REV. : D

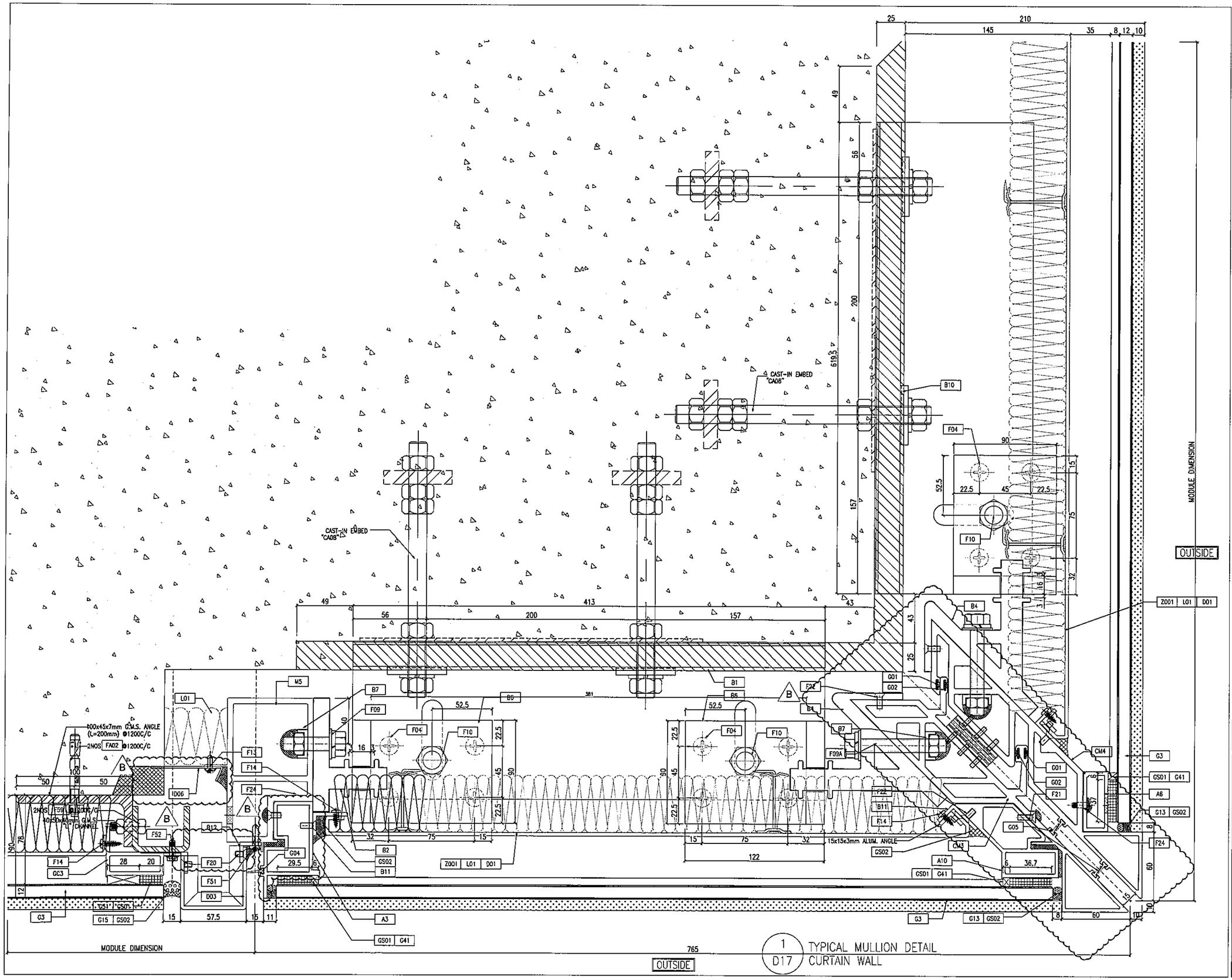

1 / D17 TYPICAL MULLION DETAIL CURTAIN WALL

B.D. REF :

CLIENT :
信和置業有限公司
Sino Land Company Limited

ARCHITECT :
ronald lu & partners
Architects . Planners . Interior Designers
Ronald Lu & Partners (HK) Ltd.
呂元祥建築師事務所(香港)有限公司

MAIN CONTRACTOR :
Gammon

STRUCTURAL ENGINEER :
AECOM

FACADE CONSULTANT:
AECOM

NOTE :
1. ALL DIMENSIONS ARE IN mm.
2. ALL ELEVATIONS ARE VIEWED FROM OUTSIDE.
3. ALL DIMENSIONS TO BE VERIFIED ON SITE BEFORE FABRICATION.

LEGEND :
X1 / X001 — DETAIL MARK NO. / REFER SHEET NO.
1. F.F.L. --FINISHED FLOOR LEVEL
2. S.F.L. --STRUCTURAL FLOOR LEVEL
3. /R --REVERSED DETAIL

NO.	DATE	REVISED	BY
B	25/05/22	REVISED AS PER COMMENTS	LS
A	07/04/22	REVISED AS PER COMMENTS	LS

JOB NO. : J-858

PROJECT :
PROPOSED RESIDENTIAL DEVELOPMENT
AT TKOTL 70RP, PHASE 11, LOHAS PARK
TSEUNG KWAN O, N.T.

TITLE :
TYPICAL MULLION DETAIL
FOR CURTAIN WALL

DATE : 22-OCT-21 | SCALE : 1:1.5(A1)

DRAWN BY : | CHECKED BY :

美特鋁質有限公司
MIDI ALUMINIUM FABRICATOR LTD.
Units 6-8, Sunray Industrial Centre, 1/F
610 Cha Kwo Ling Road, Kowloon
Tel:23489211-4 Fax:(852)27727666

DWG NO. : J858-CW-D17 | REV. : B

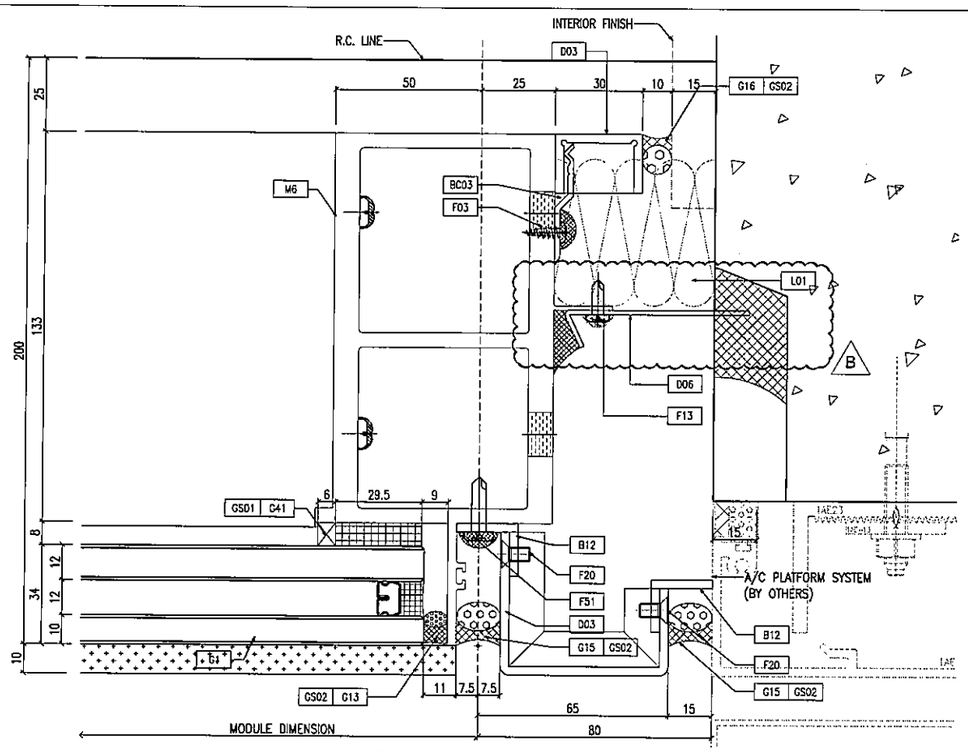

1 D18 TYPICAL MULLION DETAIL CURTAIN WALL

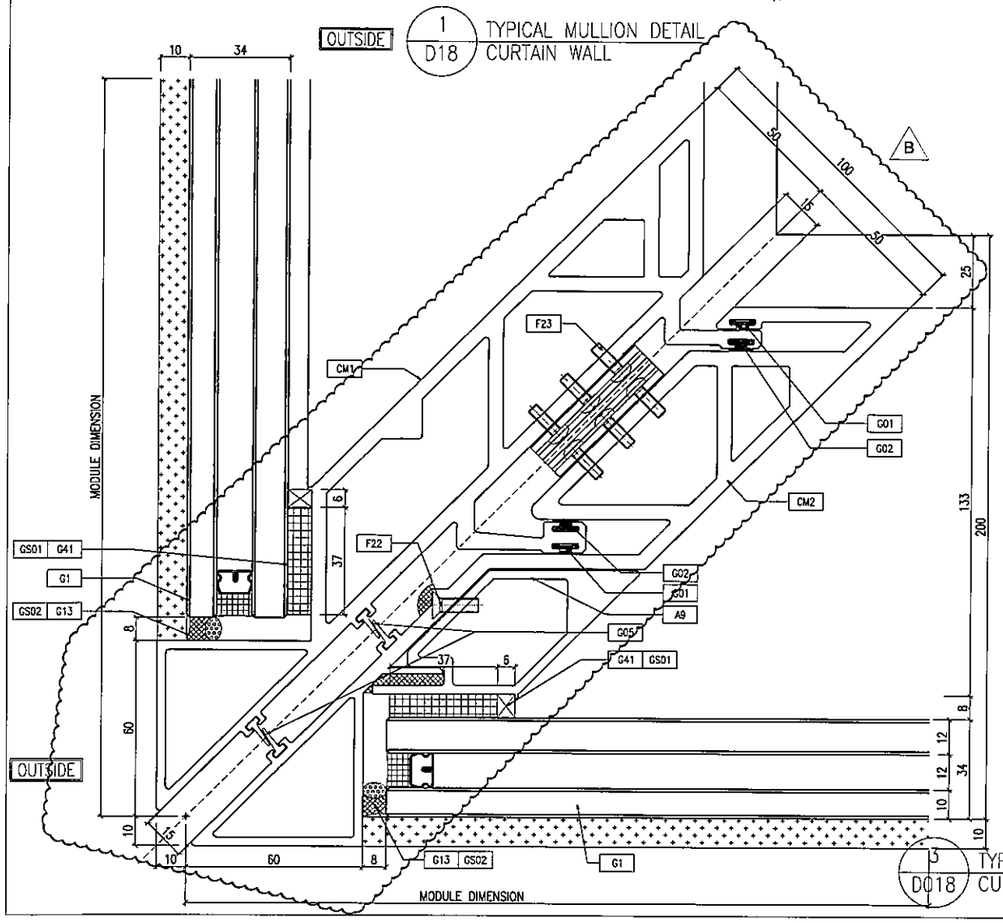

3 D018 TYPICAL MULLION DETAIL CURTAIN WALL

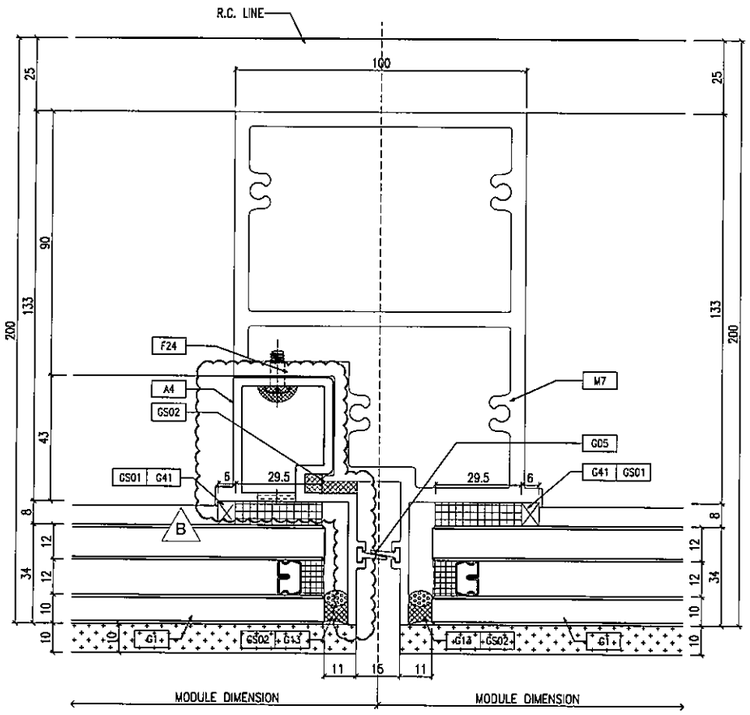

2 D18 TYPICAL MULLION DETAIL CURTAIN WALL

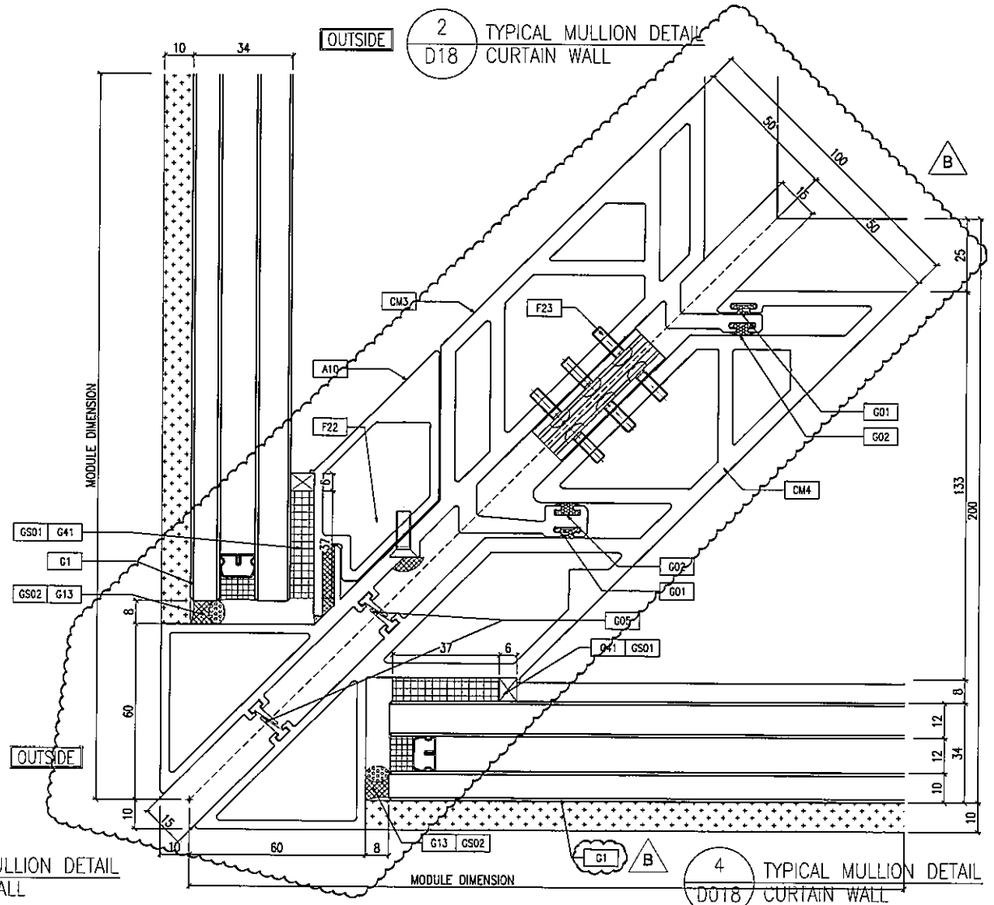

4 D018 TYPICAL MULLION DETAIL CURTAIN WALL

B.D. REF :

CLIENT :
信和置業有限公司
Sino Land Company Limited

ARCHITECT :
ronald lu & partners
Architects · Planners · Interior Designers
Ronald Lu & Partners (HK) Ltd.
呂元祥建築師事務所(香港)有限公司

MAIN CONTRACTOR :
Gammon

STRUCTURAL ENGINEER :
AECOM

FACADE CONSULTANT:
AECOM

NOTE :
1. ALL DIMENSIONS ARE IN mm.
2. ALL ELEVATIONS ARE VIEWED FROM OUTSIDE.
3. ALL DIMENSIONS TO BE VERIFIED ON SITE BEFORE FABRICATION.

LEGEND :
X1 / X001 — DETAIL MARK NO. / REFER SHEET NO.
1. F.F.L. --FINISHED FLOOR LEVEL
2. S.F.L. --STRUCTURAL FLOOR LEVEL
3. /R --REVERSED DETAIL

NO.	DATE	REVISED	BY
B	25/05/22	REVISED AS PER COMMENTS	LS
A	07/04/22	REVISED AS PER COMMENTS	LS

JOB NO. : J-858

PROJECT :
PROPOSED RESIDENTIAL DEVELOPMENT
AT TKOTL 70RP, PHASE 11, LOHAS PARK
TSEUNG KWAN O, N.T.

TITLE :
TYPICAL MULLION DETAIL
FOR CURTAIN WALL

DATE : 22-OCT-21 | SCALE : 1:1(A1)

DRAWN BY : | CHECKED BY :

美特鋁質有限公司
MIDI ALUMINIUM FABRICATOR LTD.
Units 6-8, Sunray Industrial Centre, 1/F
610 Cha Kwo Ling Road, Kowloon
Tel:23489211-4 Fax:(852)27727666

DWG NO. : J858-CW-D18 | REV. : B

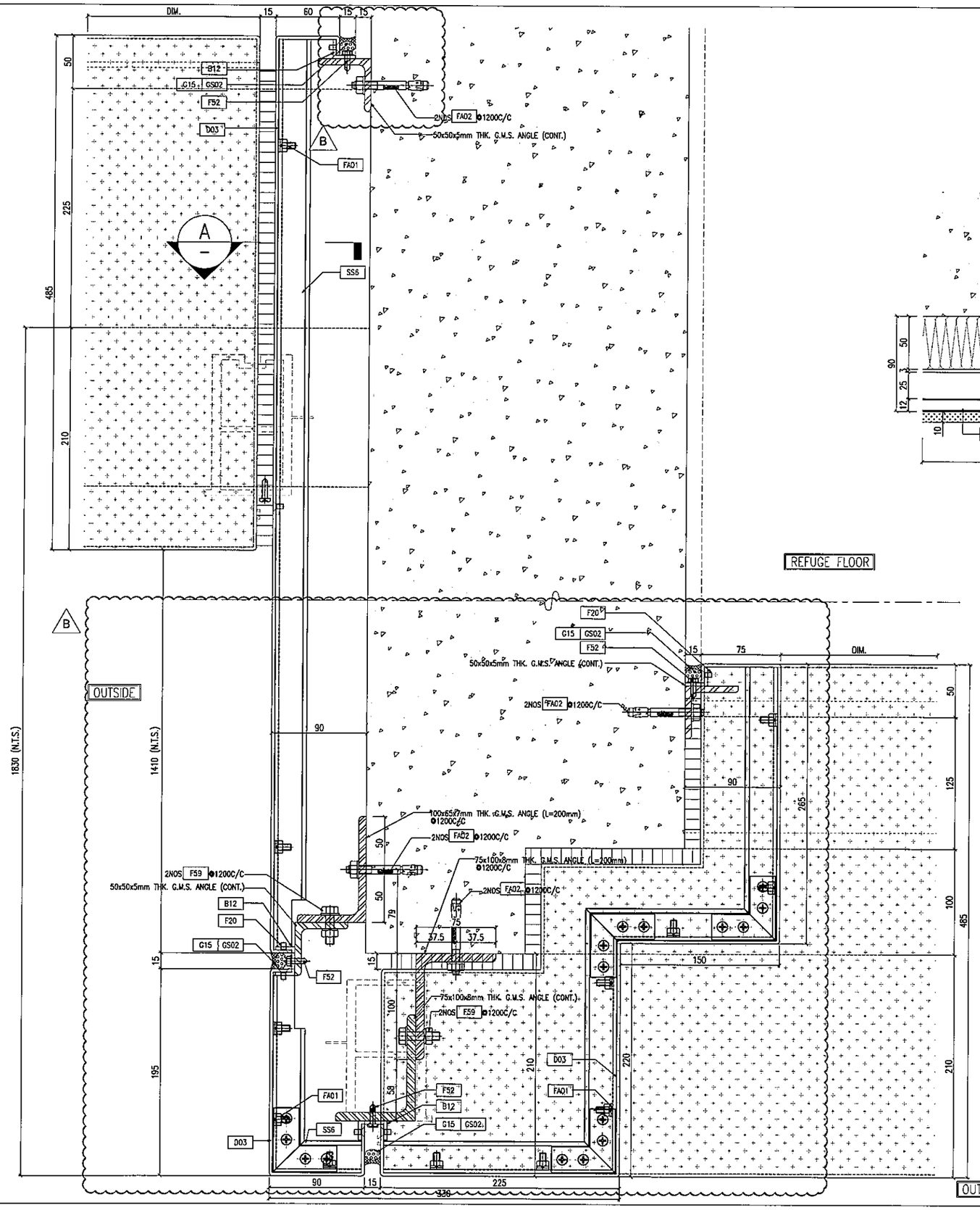

1 / D19 TYPICAL MULLION DETAIL CURTAIN WALL

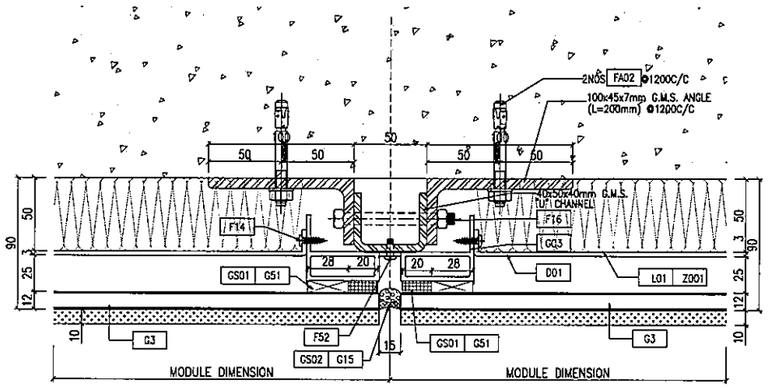

2 / D19 TYPICAL MULLION DETAIL CURTAIN WALL

OUTSIDE

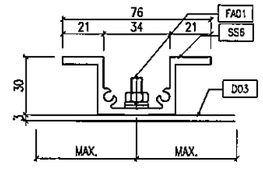

OUTSIDE

A / D19 TYPICAL MULLION DETAIL CURTAIN WALL

B.D. REF :

CLIENT :
信和置業有限公司
Sino Land Company Limited

ARCHITECT :
ronald lu & partners
Architects . Planners . Interior Designers
Ronald Lu & Partners (HK) Ltd.
呂元祥建築師事務所(香港)有限公司

MAIN CONTRACTOR :
Gammon

STRUCTURAL ENGINEER :
AECOM

FACADE CONSULTANT:
AECOM

NOTE :
1. ALL DIMENSIONS ARE IN mm.
2. ALL ELEVATIONS ARE VIEWED FROM OUTSIDE.
3. ALL DIMENSIONS TO BE VERIFIED ON SITE BEFORE FABRICATION.

LEGEND :
X1 / X001 — DETAIL MARK NO. / REFER SHEET NO.
1. F.F.L. — FINISHED FLOOR LEVEL
2. S.F.L. — STRUCTURAL FLOOR LEVEL
3. (/R) — REVERSED DETAIL

NO.	DATE	REVISED	BY
B	25/05/22	REVISED AS PER COMMENTS	LS
A	07/04/22	REVISED AS PER COMMENTS	LS

JOB NO. : J-858

PROJECT :
PROPOSED RESIDENTIAL DEVELOPMENT
AT TKOTL 70RP, PHASE 11, LOHAS PARK
TSEUNG KWAN O, N.T.

TITLE :
TYPICAL MULLION DETAIL
FOR CURTAIN WALL

DATE : 22-OCT-21 | SCALE : 1:2(A1)

DRAWN BY : | CHECKED BY :

美特鋁質有限公司
MIDI ALUMINIUM FABRICATOR LTD.
Units 6-8, Sunray Industrial Centre, 1/F
610 Cha Kwo Ling Road, Kowloon
Tel:23489211-4 Fax:(852)27727666

DWG NO. : J858-CW-D19 | REV. : B

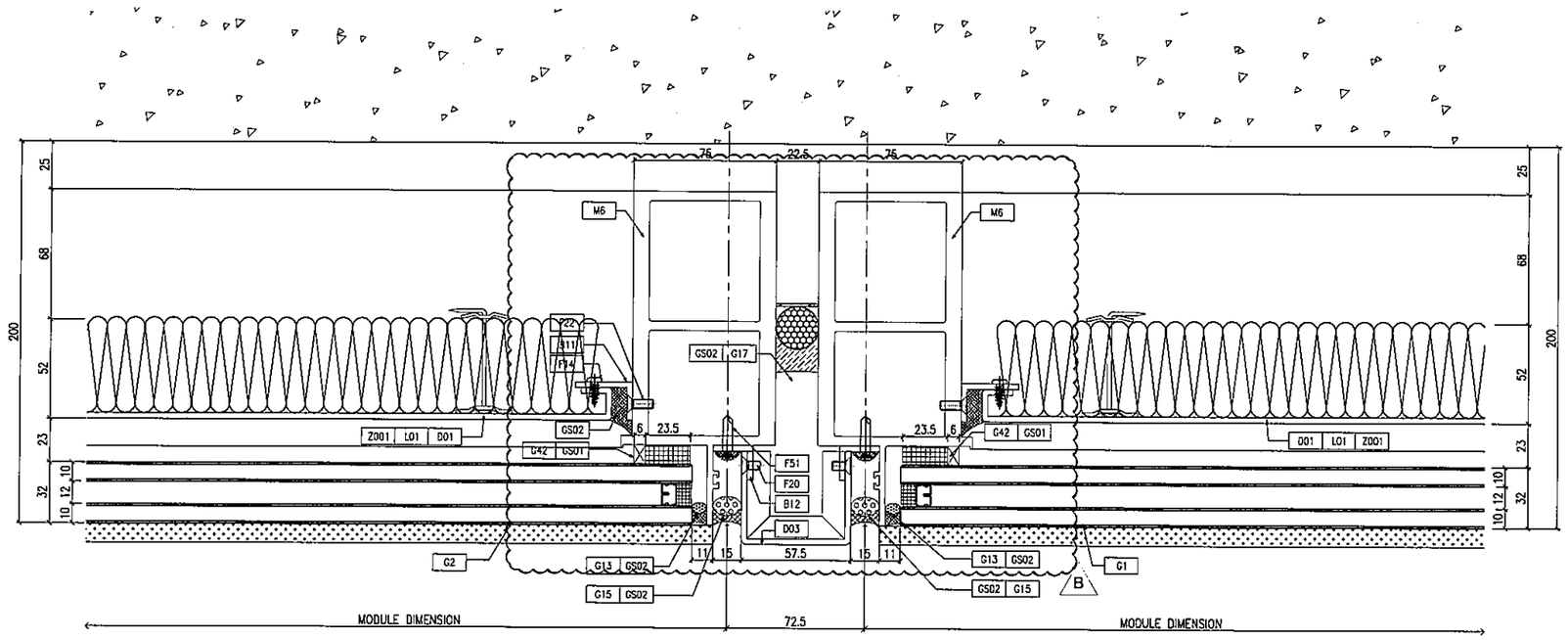

OUTSIDE

1 / D20 TYPICAL MULLION DETAIL CURTAIN WALL

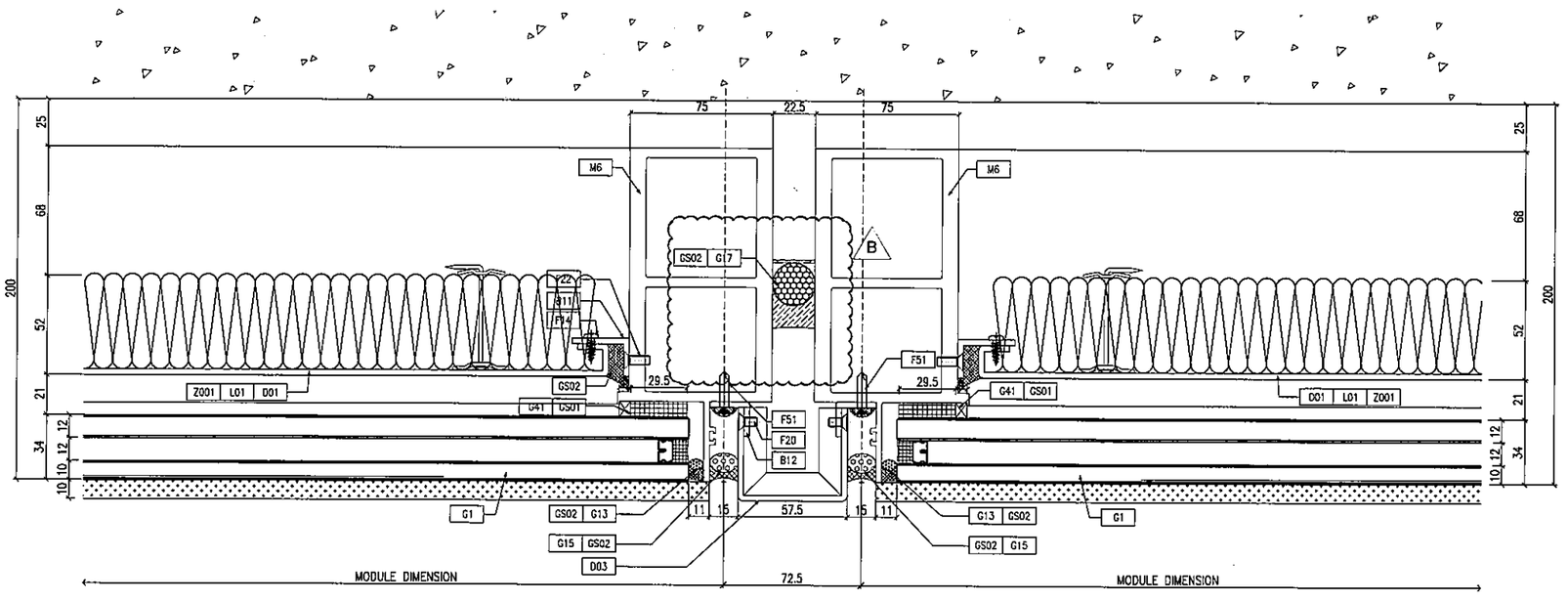

OUTSIDE

2 / D20 TYPICAL MULLION DETAIL CURTAIN WALL

B.D. REF :

CLIENT :
信和置業有限公司
Sino Land Company Limited

ARCHITECT :
ronald lu & partners
Architects . Planners . Interior Designers
Ronald Lu & Partners (HK) Ltd.
呂元祥建築師事務所(香港)有限公司

MAIN CONTRACTOR :
Gammon

STRUCTURAL ENGINEER :
AECOM

FACADE CONSULTANT:
AECOM

NOTE :
1. ALL DIMENSIONS ARE IN mm.
2. ALL ELEVATIONS ARE VIEWED FROM OUTSIDE.
3. ALL DIMENSIONS TO BE VERIFIED ON SITE BEFORE FABRICATION.

LEGEND :
X1 — DETAIL MARK NO.
X001 — REFER SHEET NO.

1. F.F.L. --FINISHED FLOOR LEVEL
2. S.F.L. --STRUCTURAL FLOOR LEVEL
3. (/R) --REVERSED DETAIL

NO.	DATE	REVISED	BY
B	25/05/22	REVISED AS PER COMMENTS	LS
A	07/04/22	REVISED AS PER COMMENTS	LS

JOB NO. : J-858

PROJECT :
PROPOSED RESIDENTIAL DEVELOPMENT
AT TKOTL 70RP, PHASE 11, LOHAS PARK
TSEUNG KWAN O, N.T.

TITLE :
TYPICAL MULLION DETAIL
FOR CURTAIN WALL

DATE : 22-OCT-21 | SCALE : 1:1.5(A1)

DRAWN BY : | CHECKED BY :

美特鋁質有限公司
MIDI ALUMINIUM FABRICATOR LTD.
Units 6-8, Sunray Industrial Centre, 1/F
610 Cha Kwo Ling Road, Kowloon
Tel:23489211-4 Fax:(852)27727666

DWG NO. : J858-CW-D20 | REV. : B

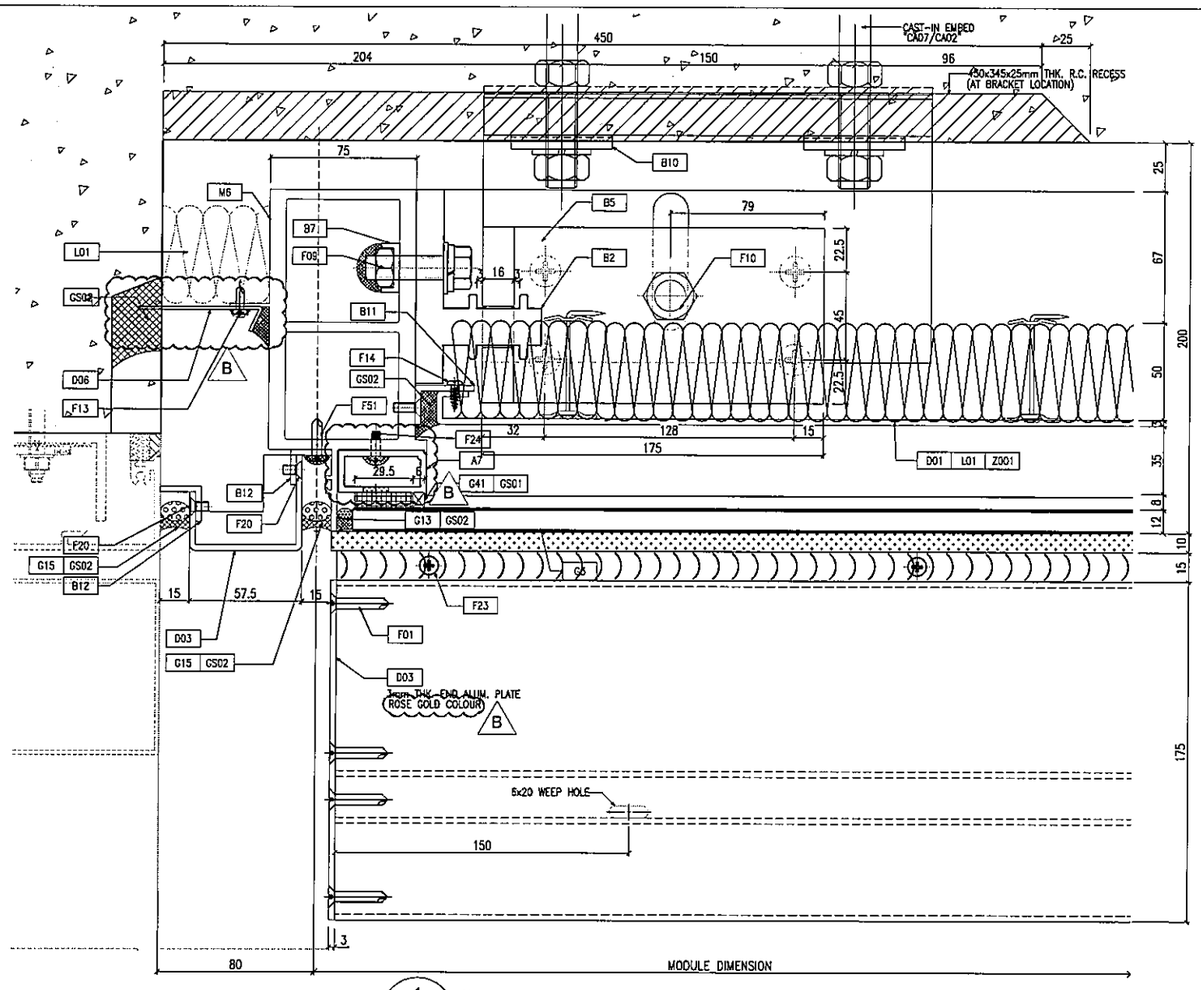

1 / D21 TYPICAL MULLION DETAIL CURTAIN WALL — OUTSIDE

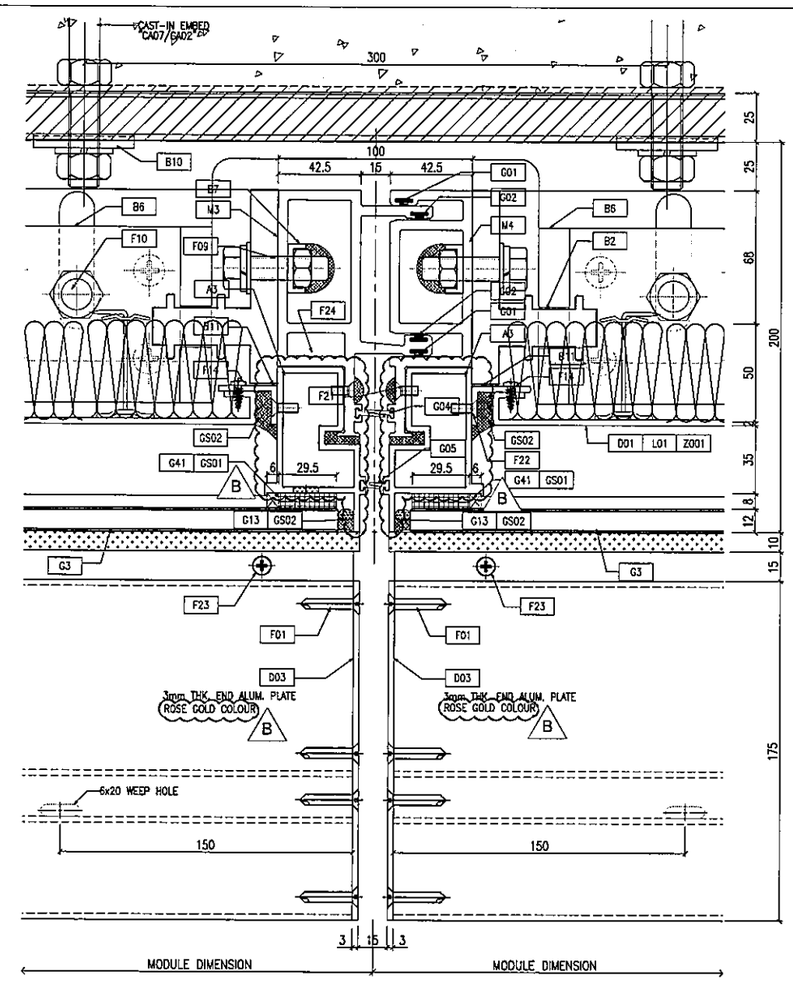

2 / D21 TYPICAL MULLION DETAIL CURTAIN WALL — OUTSIDE

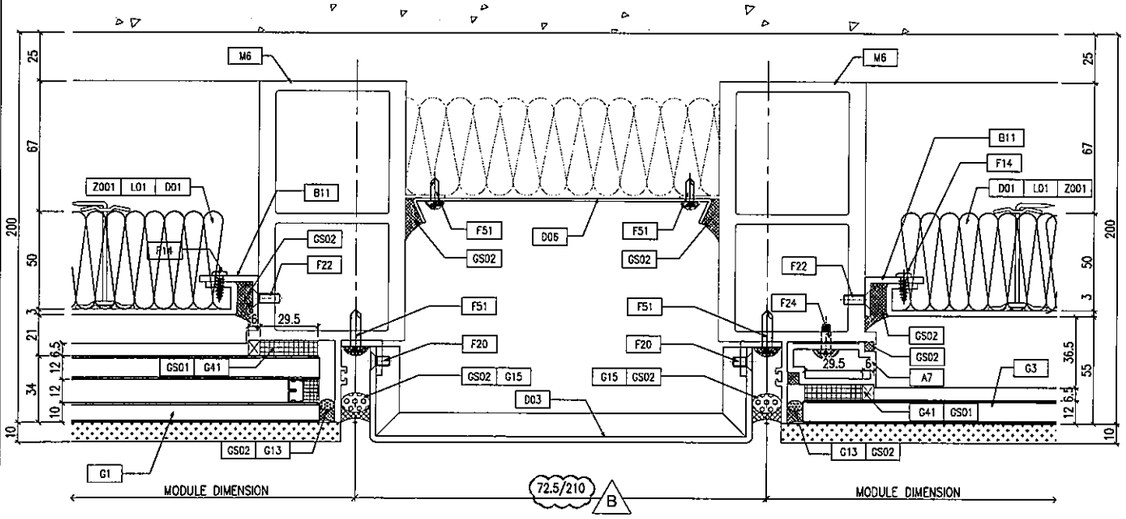

3 / D21 TYPICAL MULLION DETAIL CURTAIN WALL — OUTSIDE

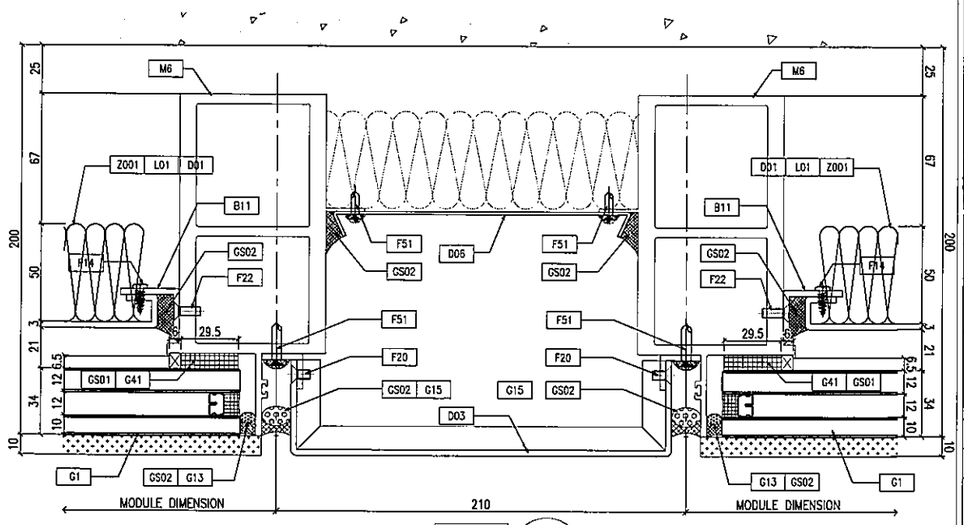

OUTSIDE — 4 / D21 TYPICAL MULLION DETAIL CURTAIN WALL

B.D. REF :

CLIENT :
信和置業有限公司
Sino Land Company Limited

ARCHITECT :
ronald lu & partners
Architects . Planners . Interior Designers
Ronald Lu & Partners (HK) Ltd.
呂元祥建築師事務所(香港)有限公司

MAIN CONTRACTOR :
Gammon

STRUCTURAL ENGINEER :
AECOM

FACADE CONSULTANT:
AECOM

NOTE :
1. ALL DIMENSIONS ARE IN mm.
2. ALL ELEVATIONS ARE VIEWED FROM OUTSIDE.
3. ALL DIMENSIONS TO BE VERIFIED ON SITE BEFORE FABRICATION.

LEGEND :
X1 — DETAIL MARK NO.
X001 — REFER SHEET NO.
1. F.F.L. --FINISHED FLOOR LEVEL
2. S.F.L. --STRUCTURAL FLOOR LEVEL
3. (R) --REVERSED DETAIL

NO.	DATE	REVISED	BY
B	25/05/22	REVISED AS PER COMMENTS	LS
A	07/04/22	REVISED AS PER COMMENTS	LS

JOB NO. : J-858

PROJECT :
PROPOSED RESIDENTIAL DEVELOPMENT
AT TKOTL 70RP, PHASE 11, LOHAS PARK
TSEUNG KWAN O, N.T.

TITLE :
TYPICAL MULLION DETAIL
FOR CURTAIN WALL

DATE : 22-OCT-21 | SCALE : 1:1.5(A1)

DRAWN BY : | CHECKED BY :

美特鋁質有限公司
MIDI ALUMINIUM FABRICATOR LTD.
Units 6-8, Sunray Industrial Centre, 1/F
610 Cha Kwo Ling Road, Kowloon
Tel:23489211-4 Fax:(852)27727666

DWG NO. : J858-CW-D21 | REV. : B

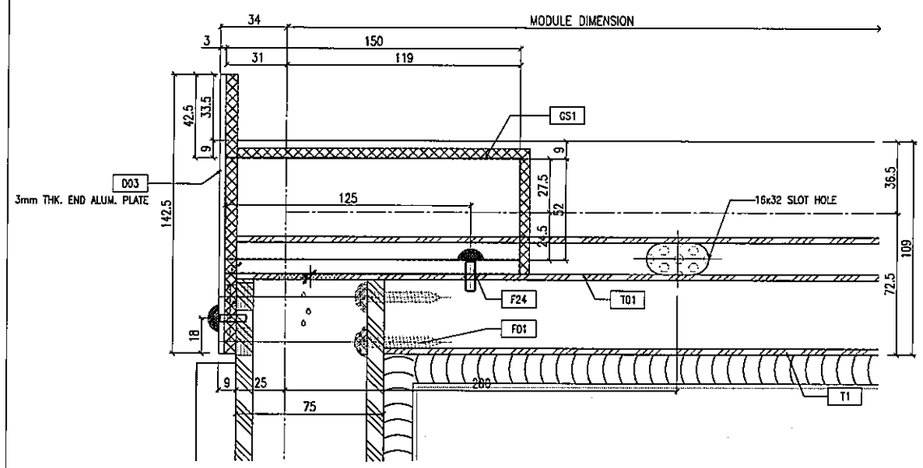

1 / D22 TYPICAL DETAIL CURTAIN WALL

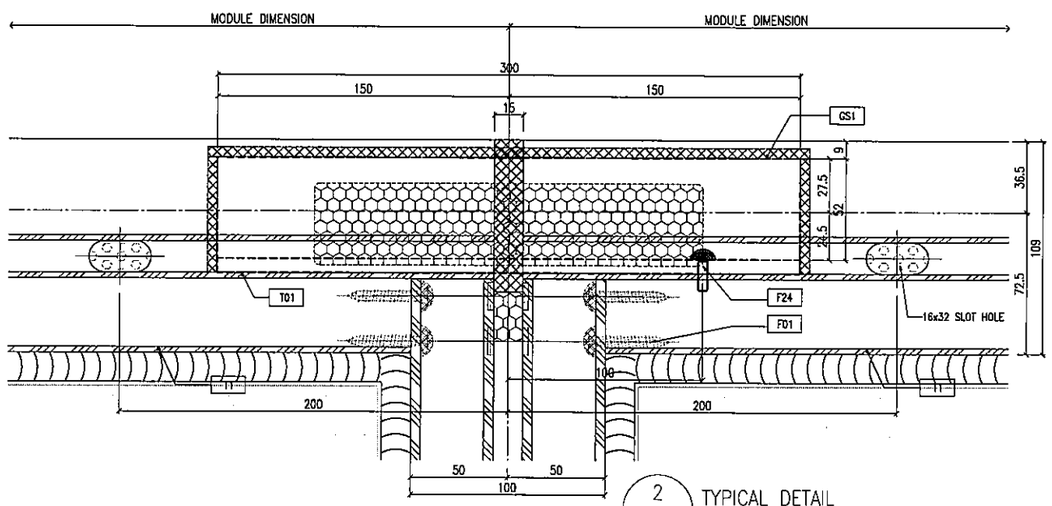

2 / D22 TYPICAL DETAIL CURTAIN WALL

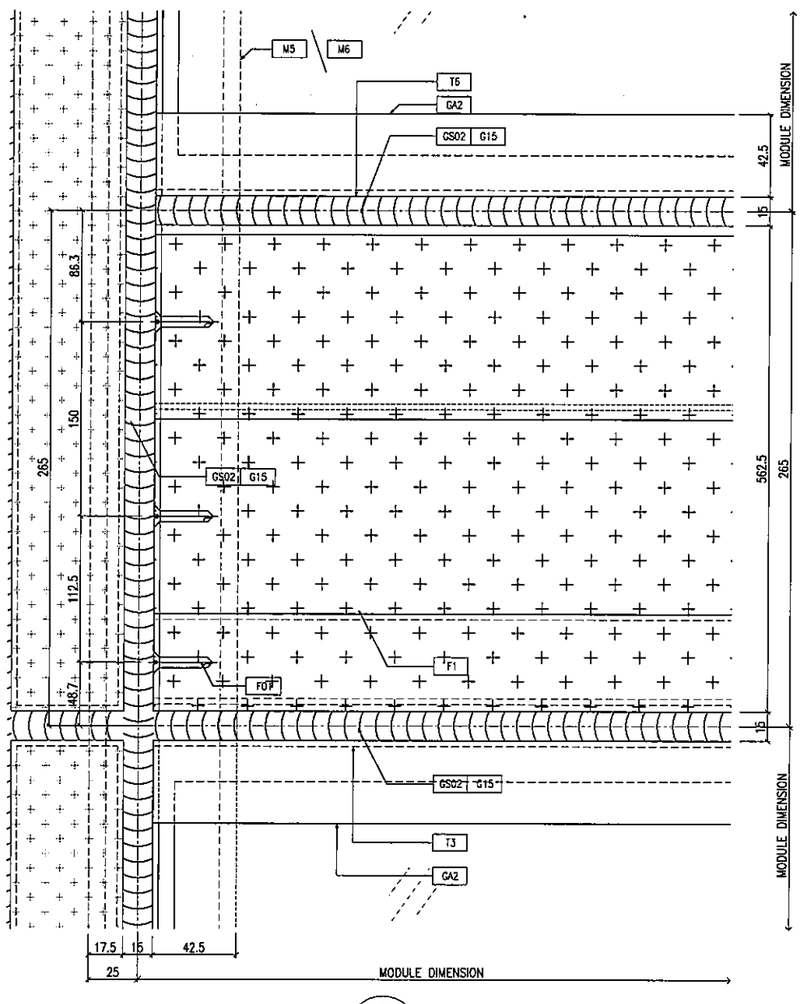

3 / D22 TYPICAL DETAIL CURTAIN WALL

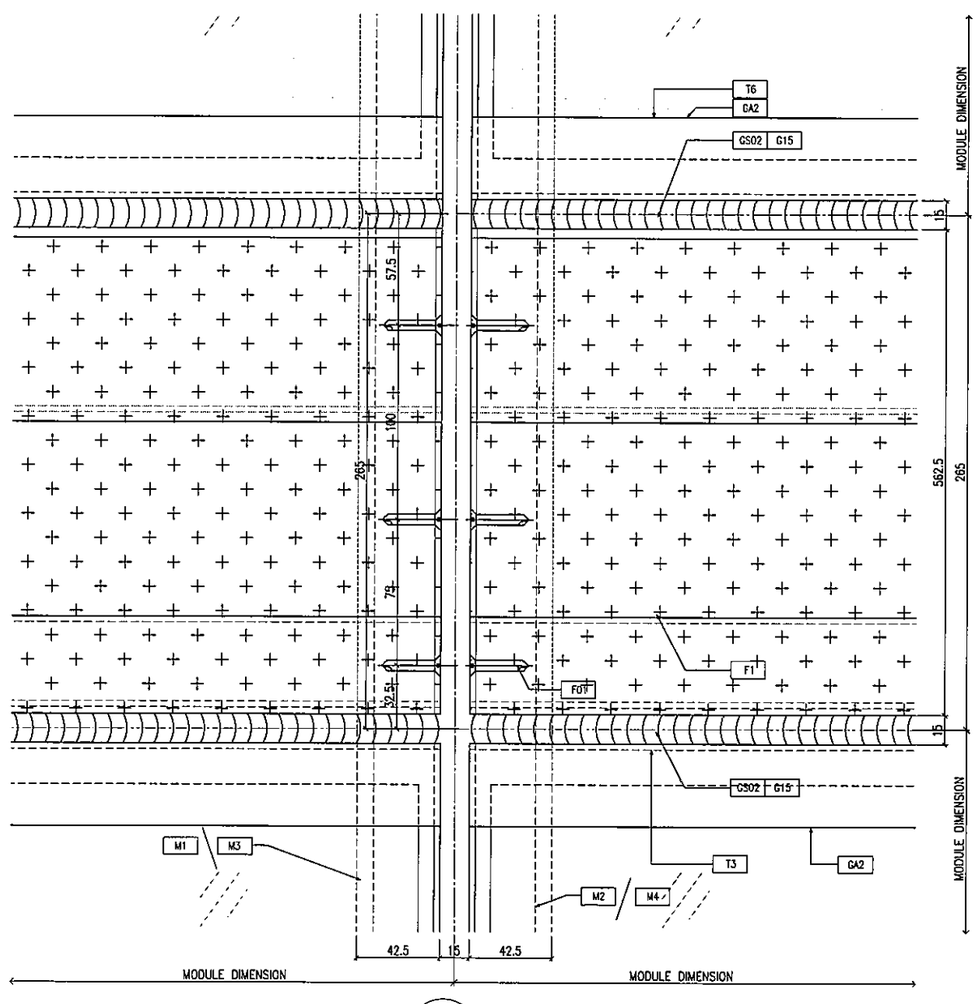

4 / D22 TYPICAL DETAIL CURTAIN WALL

B.D. REF :

CLIENT :
信和置業有限公司
Sino Land Company Limited

ARCHITECT :
ronald lu & partners
Architects . Planners . Interior Designers
Ronald Lu & Partners (HK) Ltd.
呂元祥建築師事務所(香港)有限公司

MAIN CONTRACTOR :
Gammon

STRUCTURAL ENGINEER :
AECOM

FACADE CONSULTANT:
AECOM

NOTE :
1. ALL DIMENSIONS ARE IN mm.
2. ALL ELEVATIONS ARE VIEWED FROM OUTSIDE.
3. ALL DIMENSIONS TO BE VERIFIED ON SITE BEFORE FABRICATION.

LEGEND :
X1 / XXX1 — DETAIL MARK NO. / REFER SHEET NO.
1. F.F.L. --FINISHED FLOOR LEVEL
2. S.F.L. --STRUCTURAL FLOOR LEVEL
3. /R --REVERSED DETAIL

NO.	DATE	REVISED	BY

JOB NO. : J-858

PROJECT :
PROPOSED RESIDENTIAL DEVELOPMENT
AT TKOTL 70RP, PHASE 11, LOHAS PARK
TSEUNG KWAN O, N.T.

TITLE :
TYPICAL MULLION DETAIL
FOR CURTAIN WALL

DATE : 22-OCT-21	SCALE : 1:1.5(A1)
DRAWN BY :	CHECKED BY :

美特鋁質有限公司
MIDI ALUMINUM FABRICATOR LTD.
Units 6-8, Sunray Industrial Centre, 1/F
610 Cha Kwo Ling Road, Kowloon
Tel:23489211-4 Fax:(852)27727666

DWG NO. : J858-CW-D22 | REV. : -

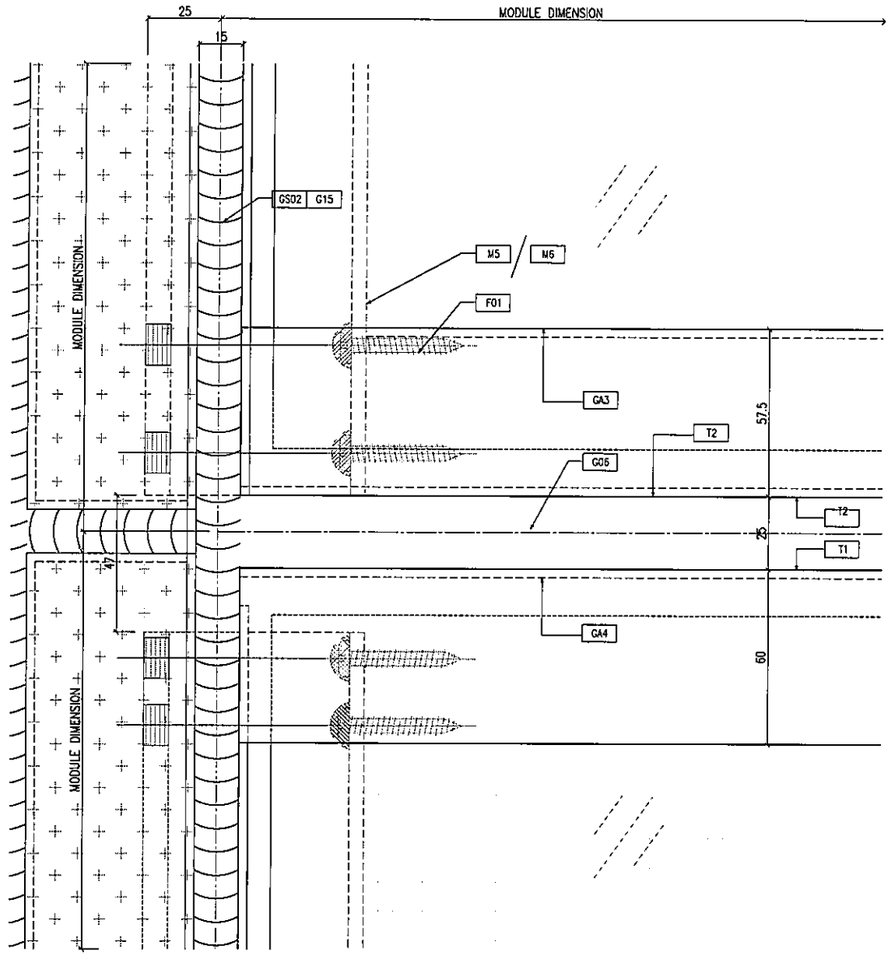

1 / D23 TYPICAL DETAIL CURTAIN WALL

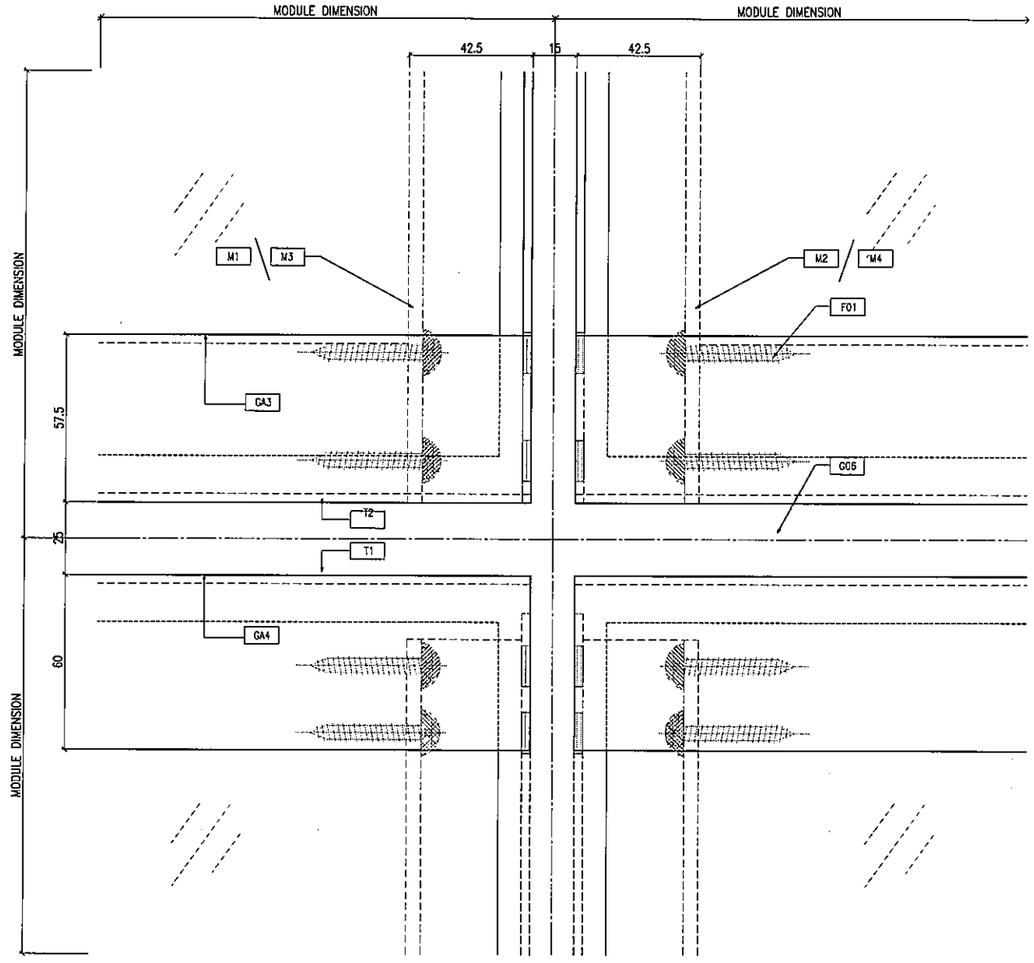

2 / D23 TYPICAL DETAIL CURTAIN WALL

B.D. REF :

CLIENT :
信和置業有限公司
Sino Land Company Limited

ARCHITECT :
ronald lu & partners
Architects Planners Interior Designers
Ronald Lu & Partners (HK) Ltd.
呂元祥建築師事務所(香港)有限公司

MAIN CONTRACTOR :
Gammon

STRUCTURAL ENGINEER :
AECOM

FACADE CONSULTANT:
AECOM

NOTE :
1. ALL DIMENSIONS ARE IN mm.
2. ALL ELEVATIONS ARE VIEWED FROM OUTSIDE.
3. ALL DIMENSIONS TO BE VERIFIED ON SITE BEFORE FABRICATION.

LEGEND :
- X1 / XOO1 — DETAIL MARK NO. / REFER SHEET NO.
1. F.F.L. --FINISHED FLOOR LEVEL
2. S.F.L. --STRUCTURAL FLOOR LEVEL
3. /R --REVERSED DETAIL

NO.	DATE	REVISED	BY

JOB NO. : J-858

PROJECT :
PROPOSED RESIDENTIAL DEVELOPMENT
AT TKOTL 70RP, PHASE 11, LOHAS PARK
TSEUNG KWAN O, N.T.

TITLE :
TYPICAL MULLION DETAIL
FOR CURTAIN WALL

DATE : 22-OCT-21	SCALE : 1:1(A1)
DRAWN BY :	CHECKED BY :

美特鋁質有限公司
MIDI ALUMINIUM FABRICATOR LTD.
Units 6-8, Sunray Industrial Centre, 1/F
610 Cha Kwo Ling Road, Kowloon
Tel:23489211-4 Fax:(852)27727666

DWG NO. : J858-CW-D23 | REV. : -

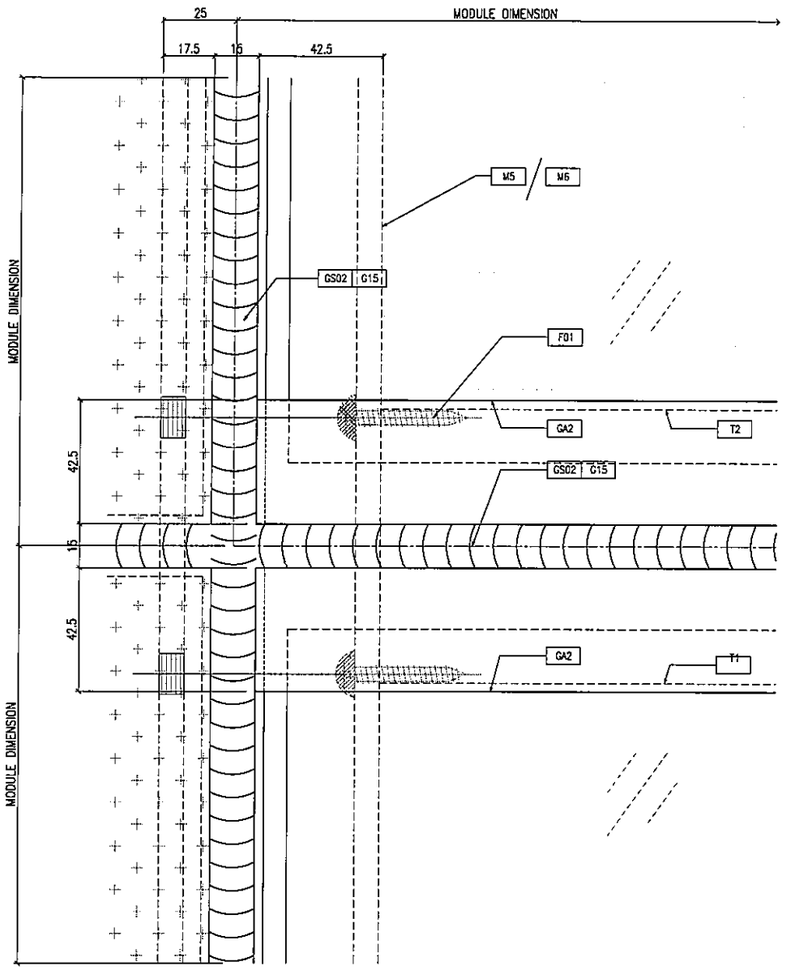

1 / D24 TYPICAL DETAIL CURTAIN WALL

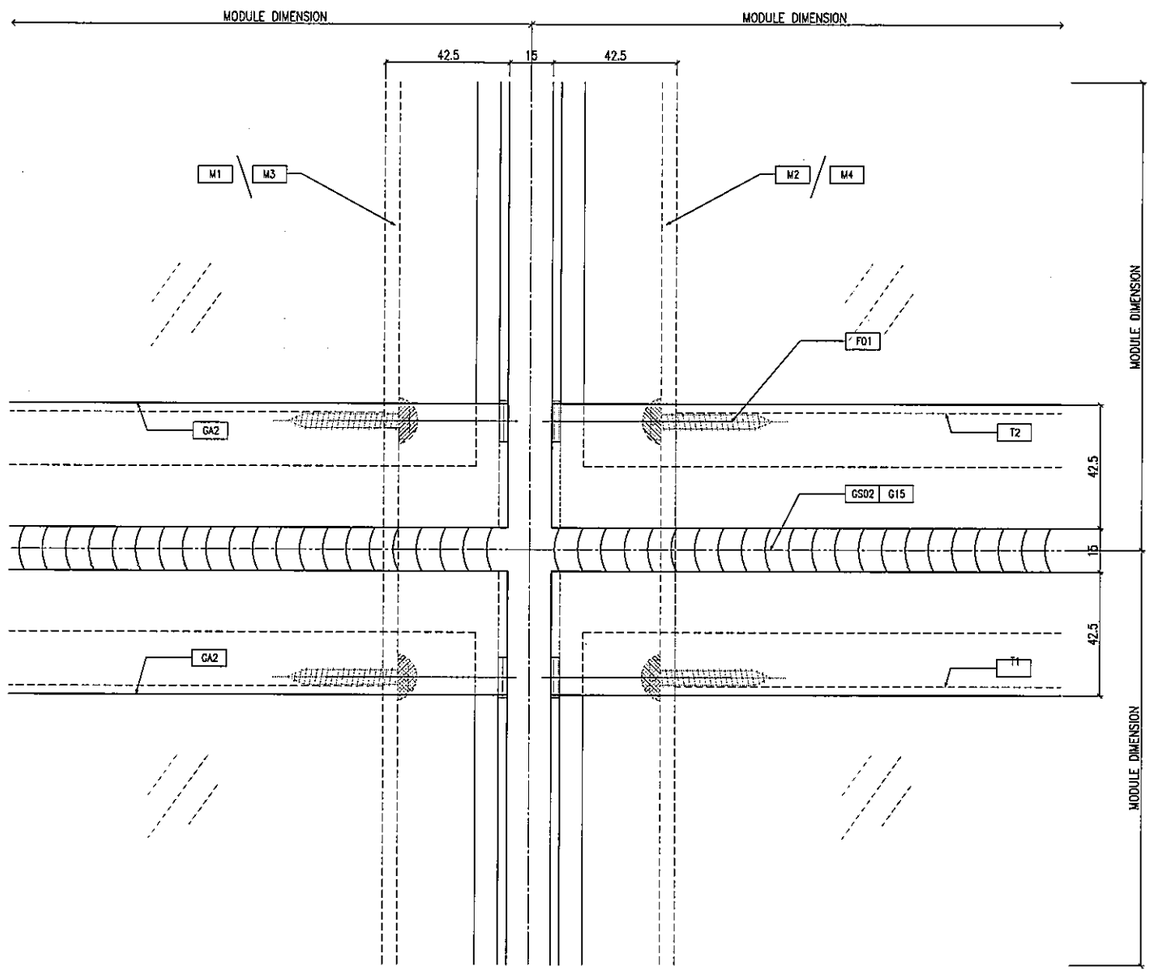

2 / D24 TYPICAL DETAIL CURTAIN WALL

B.D. REF :

CLIENT :
信和置業有限公司
Sino Land Company Limited

ARCHITECT :
ronald lu & partners
Architects . Planners . Interior Designers
Ronald Lu & Partners (HK) Ltd.
呂元祥建築師事務所(香港)有限公司

MAIN CONTRACTOR :
Gammon

STRUCTURAL ENGINEER :
AECOM

FACADE CONSULTANT:
AECOM

NOTE :
1. ALL DIMENSIONS ARE IN mm.
2. ALL ELEVATIONS ARE VIEWED FROM OUTSIDE.
3. ALL DIMENSIONS TO BE VERIFIED ON SITE BEFORE FABRICATION.

LEGEND :
X1 / XXX1 — DETAIL MARK NO. / REFER SHEET NO.
1. F.F.L. --FINISHED FLOOR LEVEL
2. S.F.L. --STRUCTURAL FLOOR LEVEL
3. (/R) --REVERSED DETAIL

NO.	DATE	REVISED	BY

JOB NO. : J-858

PROJECT :
PROPOSED RESIDENTIAL DEVELOPMENT
AT TKOTL 70RP, PHASE 11, LOHAS PARK
TSEUNG KWAN O, N.T.

TITLE :
TYPICAL MULLION DETAIL
FOR CURTAIN WALL

DATE : 22-OCT-21	SCALE : 1:1(A1)
DRAWN BY :	CHECKED BY :

美特鋁質有限公司
MIDI ALUMINIUM FABRICATOR LTD.
Units 6-8, Sunray Industrial Centre, 1/F
610 Cha Kwo Ling Road, Kowloon
Tel:23489211-4 Fax:(852)27727666

DWG NO. : J858-CW-D24 REV. : -

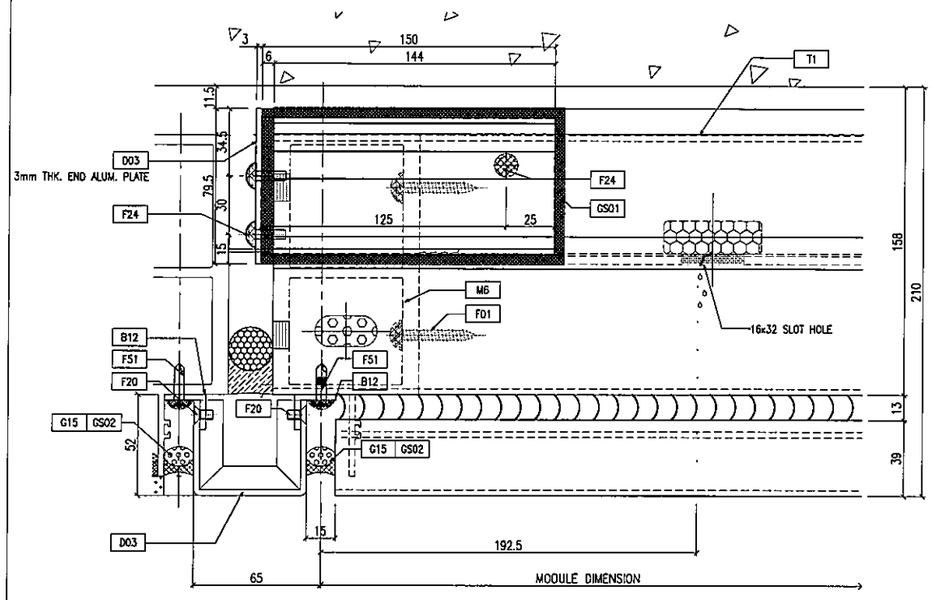

OUTSIDE 1 / D25 TYPICAL MULLION DETAIL CURTAIN WALL

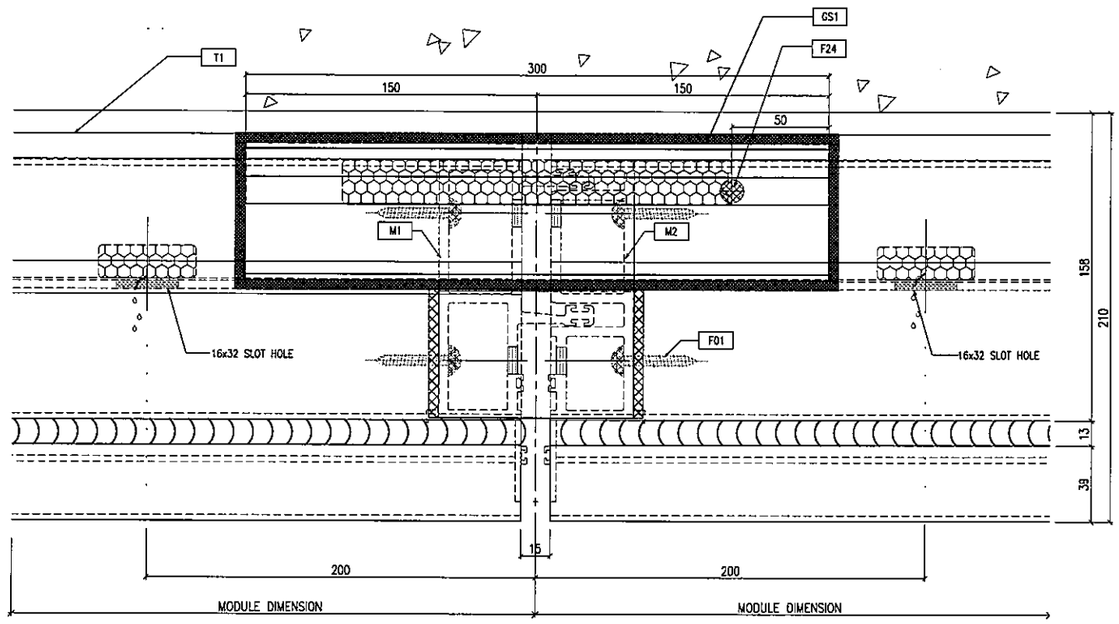

OUTSIDE 2 / D25 TYPICAL MULLION DETAIL CURTAIN WALL

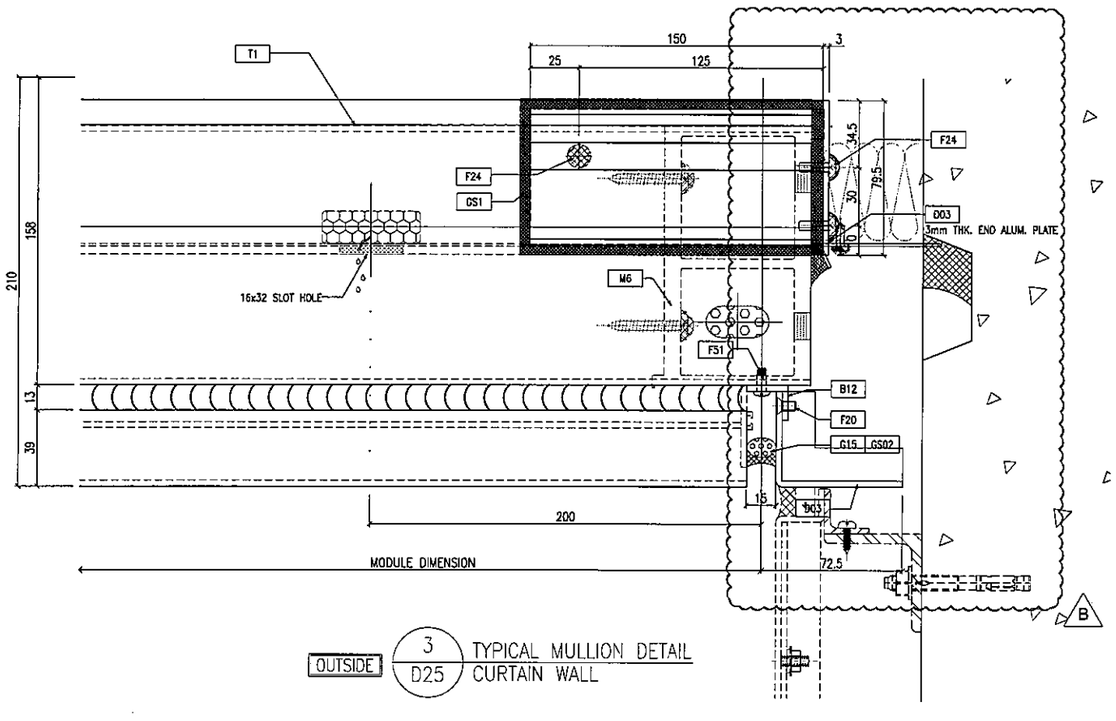

OUTSIDE 3 / D25 TYPICAL MULLION DETAIL CURTAIN WALL

B.D. REF :

CLIENT :
信和置業有限公司
Sino Land Company Limited

ARCHITECT :
ronald lu & partners
Architects . Planners . Interior Designers
Ronald Lu & Partners (HK) Ltd.
呂元祥建築師事務所(香港)有限公司

MAIN CONTRACTOR :
Gammon

STRUCTURAL ENGINEER :
AECOM

FACADE CONSULTANT:
AECOM

NOTE :
1. ALL DIMENSIONS ARE IN mm.
2. ALL ELEVATIONS ARE VIEWED FROM OUTSIDE.
3. ALL DIMENSIONS TO BE VERIFIED ON SITE BEFORE FABRICATION.

LEGEND :
X1 — DETAIL MARK NO.
X001 — REFER SHEET NO.

1. F.F.L. --FINISHED FLOOR LEVEL
2. S.F.L. --STRUCTURAL FLOOR LEVEL
3. (/R) --REVERSED DETAIL

NO.	DATE	REVISED	BY
B	25/05/22	REVISED AS PER COMMENTS	LS
A	07/04/22	REVISED AS PER COMMENTS	LS

JOB NO. : J-858

PROJECT :
PROPOSED RESIDENTIAL DEVELOPMENT
AT TKOTL 70RP, PHASE 11, LOHAS PARK
TSEUNG KWAN O, N.T.

TITLE :
TYPICAL MULLION DETAIL
FOR CURTAIN WALL

DATE : 22-OCT-21 | SCALE : 1:1.5(A1)

DRAWN BY : | CHECKED BY :

美特鋁質有限公司
MIDI ALUMINUM FABRICATOR LTD.
Units 6-8, Sunray Industrial Centre, 1/F
610 Cha Kwo Ling Road, Kowloon
Tel:23489211-4 Fax:(852)27727666

DWG NO. : J858-CW-D25 | REV. : B

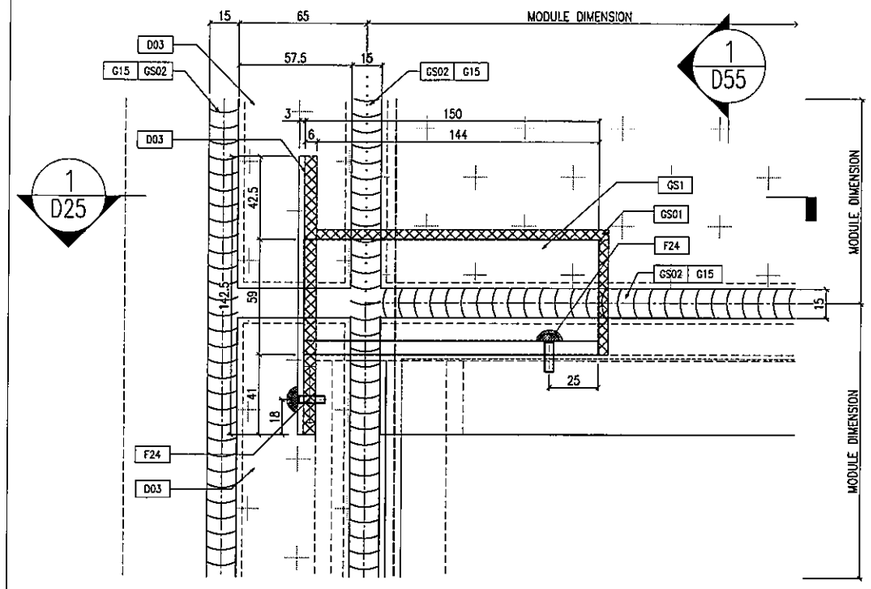

1 D25A TYPICAL MULLION DETAIL CURTAIN WALL

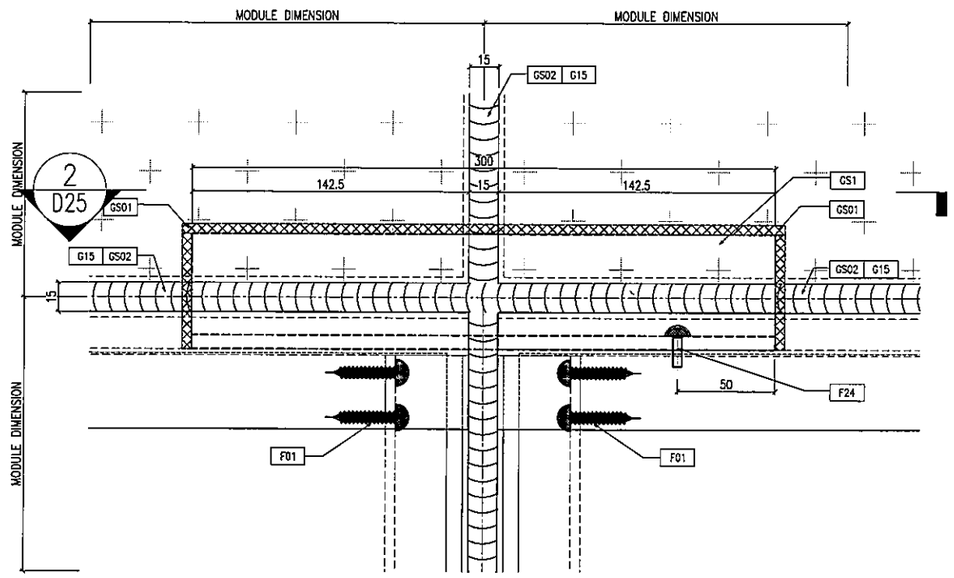

2 D25A TYPICAL MULLION DETAIL CURTAIN WALL

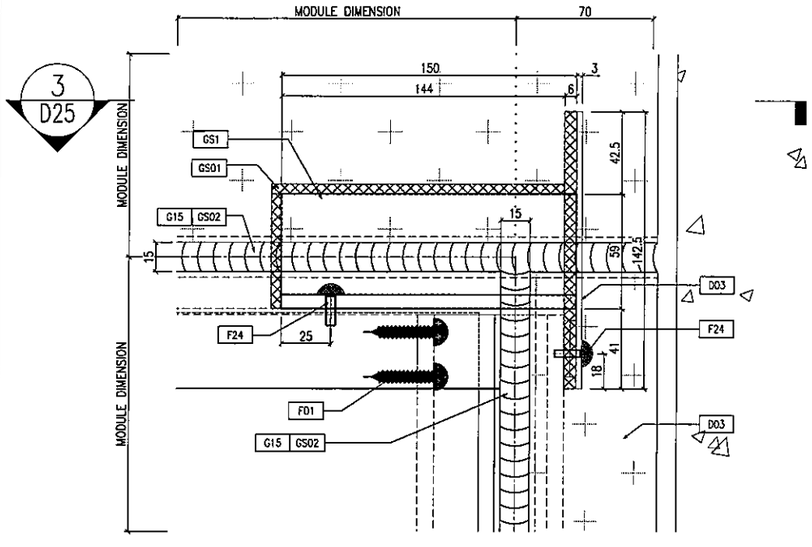

3 D25A TYPICAL MULLION DETAIL CURTAIN WALL

B.D. REF :

CLIENT :
信和置業有限公司
Sino Land Company Limited

ARCHITECT :
ronald lu & partners
Architects . Planners . Interior Designers
Ronald Lu & Partners (HK) Ltd.
呂元祥建築師事務所(香港)有限公司

MAIN CONTRACTOR :
Gammon

STRUCTURAL ENGINEER :
AECOM

FACADE CONSULTANT:
AECOM

NOTE :
1. ALL DIMENSIONS ARE IN mm.
2. ALL ELEVATIONS ARE VIEWED FROM OUTSIDE.
3. ALL DIMENSIONS TO BE VERIFIED ON SITE BEFORE FABRICATION.

LEGEND :
X1 — DETAIL MARK NO.
X001 — REFER SHEET NO.
1. F.F.L. --FINISHED FLOOR LEVEL
2. S.F.L. --STRUCTURAL FLOOR LEVEL
3. (R) --REVERSED DETAIL

NO.	DATE	REVISED	BY

JOB NO. : J-858

PROJECT :
PROPOSED RESIDENTIAL DEVELOPMENT
AT TKOTL 70RP, PHASE 11, LOHAS PARK
TSEUNG KWAN O, N.T.

TITLE :
TYPICAL MULLION DETAIL
FOR CURTAIN WALL

DATE : 22-OCT-21	SCALE : 1:1.5(A1)
DRAWN BY :	CHECKED BY :

美特鋁質有限公司
MIDI ALUMINIUM FABRICATOR LTD.
Units 6-8, Sunray Industrial Centre, 1/F
610 Cha Kwo Ling Road, Kowloon
Tel:23489211-4 Fax:(852)27727696

DWG NO. : J858-CW-D25A REV. : -

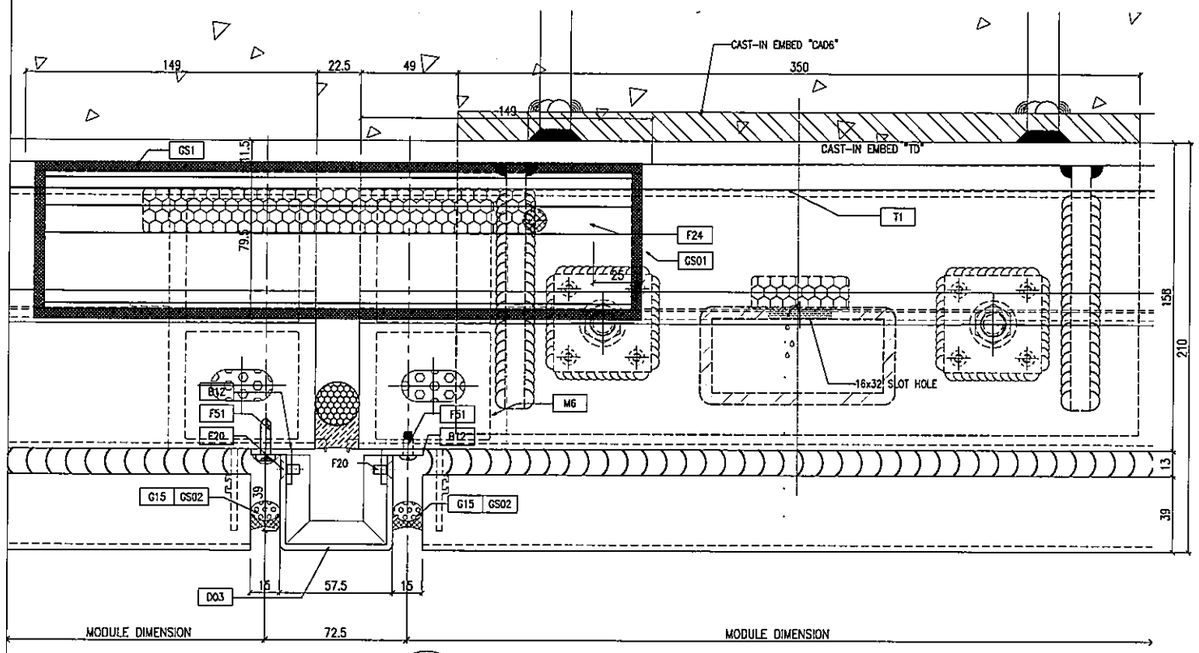

OUTSIDE

1 / D26 TYPICAL MULLION DETAIL CURTAIN WALL

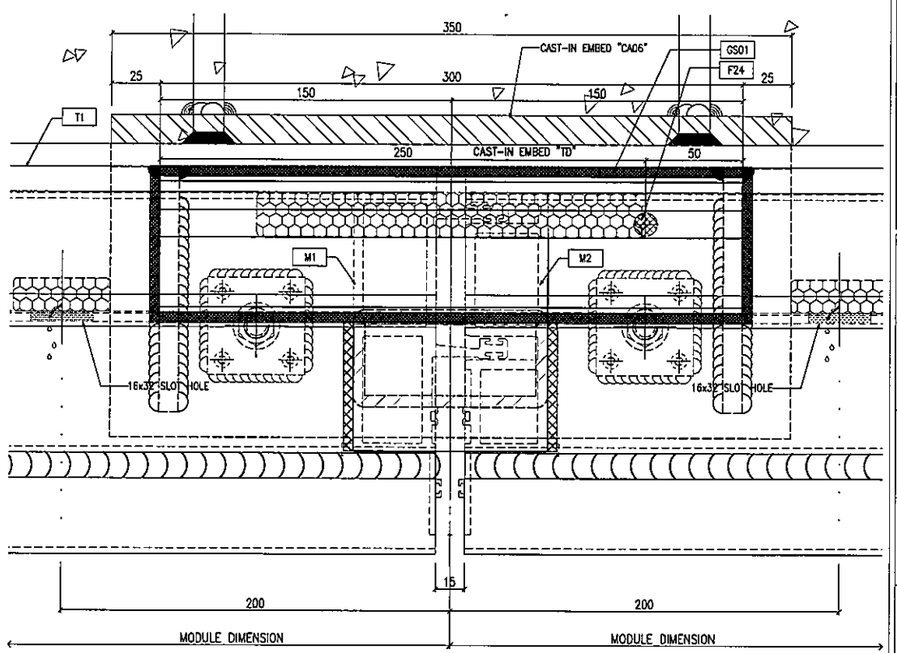

OUTSIDE

2 / D26 TYPICAL MULLION DETAIL CURTAIN WALL

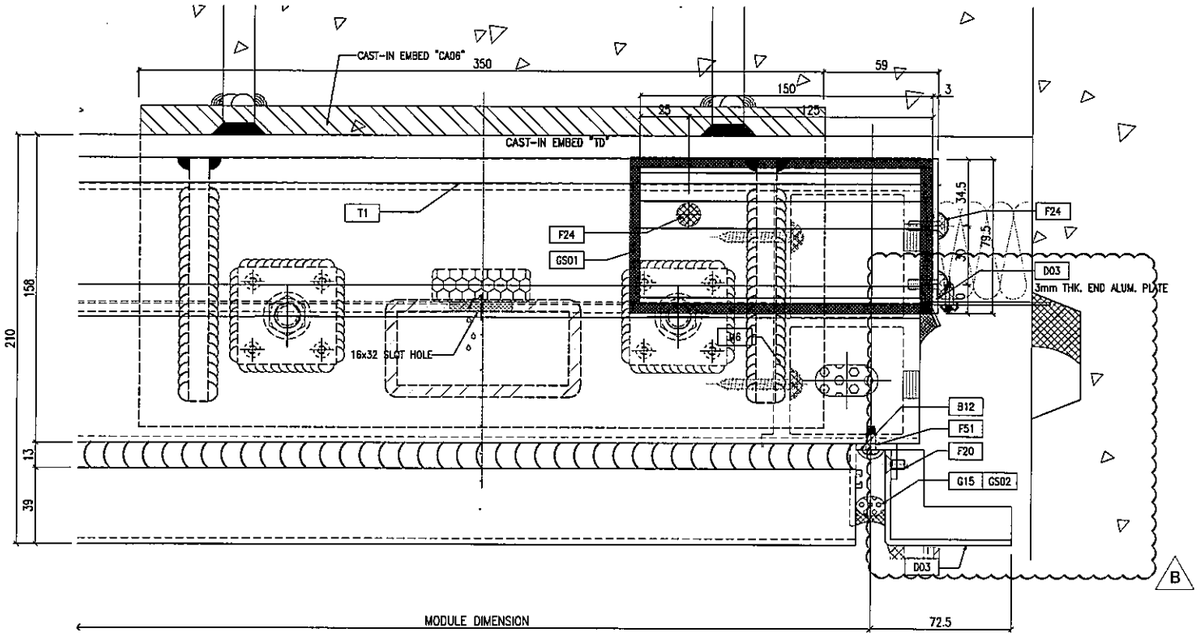

OUTSIDE

3 / D26 TYPICAL MULLION DETAIL CURTAIN WALL

B.D. REF :

CLIENT :
信和置業有限公司
Sino Land Company Limited

ARCHITECT :
ronald lu & partners
Architects, Planners, Interior Designers
Ronald Lu & Partners (HK) Ltd.
呂元祥建築師事務所(香港)有限公司

MAIN CONTRACTOR :
Gammon

STRUCTURAL ENGINEER :
AECOM

FACADE CONSULTANT:
AECOM

NOTE :
1. ALL DIMENSIONS ARE IN mm.
2. ALL ELEVATIONS ARE VIEWED FROM OUTSIDE.
3. ALL DIMENSIONS TO BE VERIFIED ON SITE BEFORE FABRICATION.

LEGEND :
X1 / XDG1 — DETAIL MARK NO. / REFER SHEET NO.
1. F.F.L. --FINISHED FLOOR LEVEL
2. S.F.L. --STRUCTURAL FLOOR LEVEL
3. /R --REVERSED DETAIL

NO.	DATE	REVISED	BY
B	25/05/22	REVISED AS PER COMMENTS	LS
A	07/04/22	REVISED AS PER COMMENTS	LS

JOB NO. : J-858

PROJECT :
PROPOSED RESIDENTIAL DEVELOPMENT
AT TKOTL 70RP, PHASE 11, LOHAS PARK
TSEUNG KWAN O, N.T.

TITLE :
TYPICAL MULLION DETAIL
FOR CURTAIN WALL

DATE : 22-OCT-21 | SCALE : 1:1.5(A1)

DRAWN BY : | CHECKED BY :

美特鋁質有限公司
MIDI ALUMINIUM FABRICATOR LTD.
Units 6-8, Sunray Industrial Centre, 1/F
610 Cha Kwo Ling Road, Kowloon
Tel:23489211-4 Fax:(852)27727666

DWG NO. : J858-CW-D26 | REV. : B

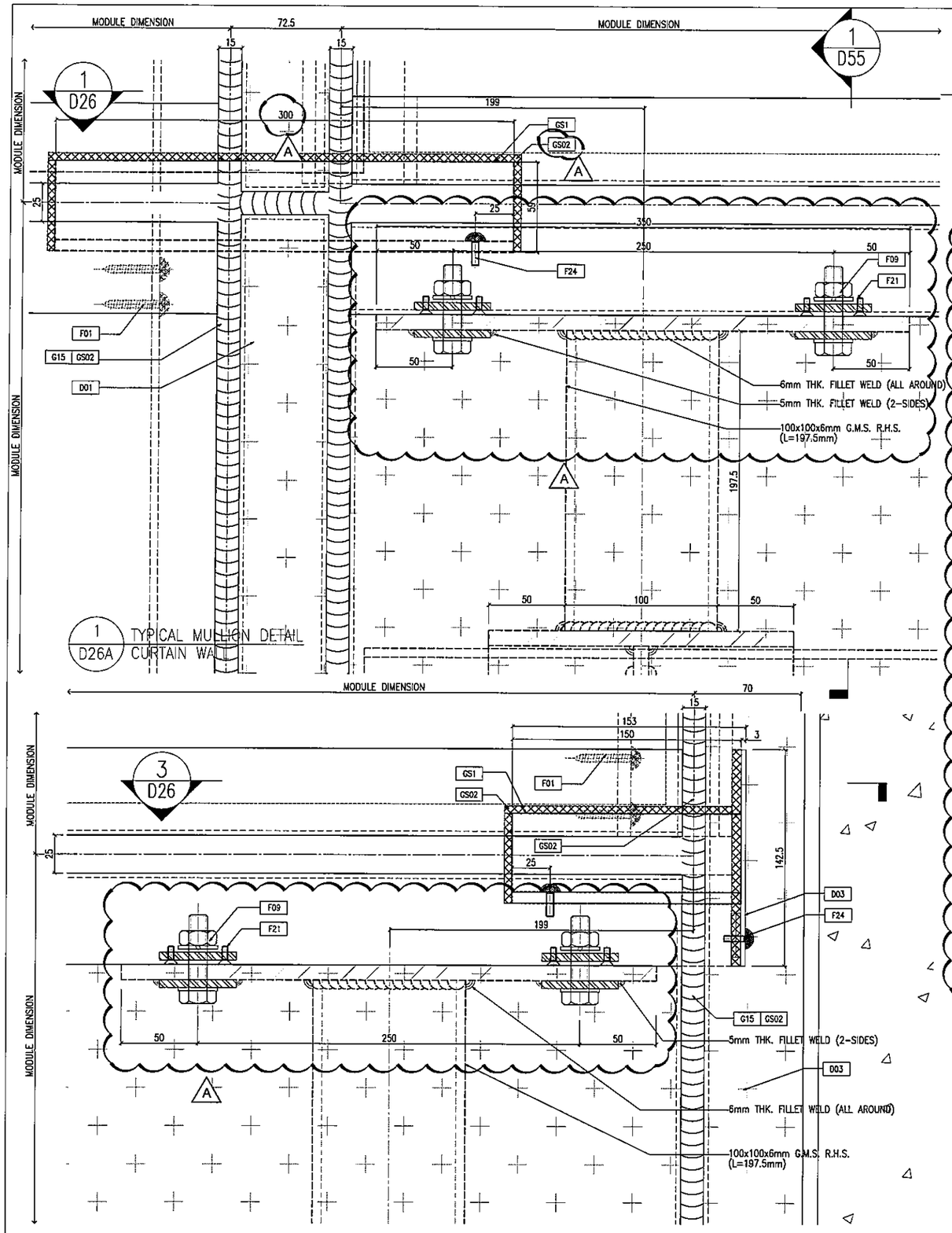

1 D26A TYPICAL MULLION DETAIL CURTAIN WALL

3 D26A TYPICAL MULLION DETAIL CURTAIN WALL

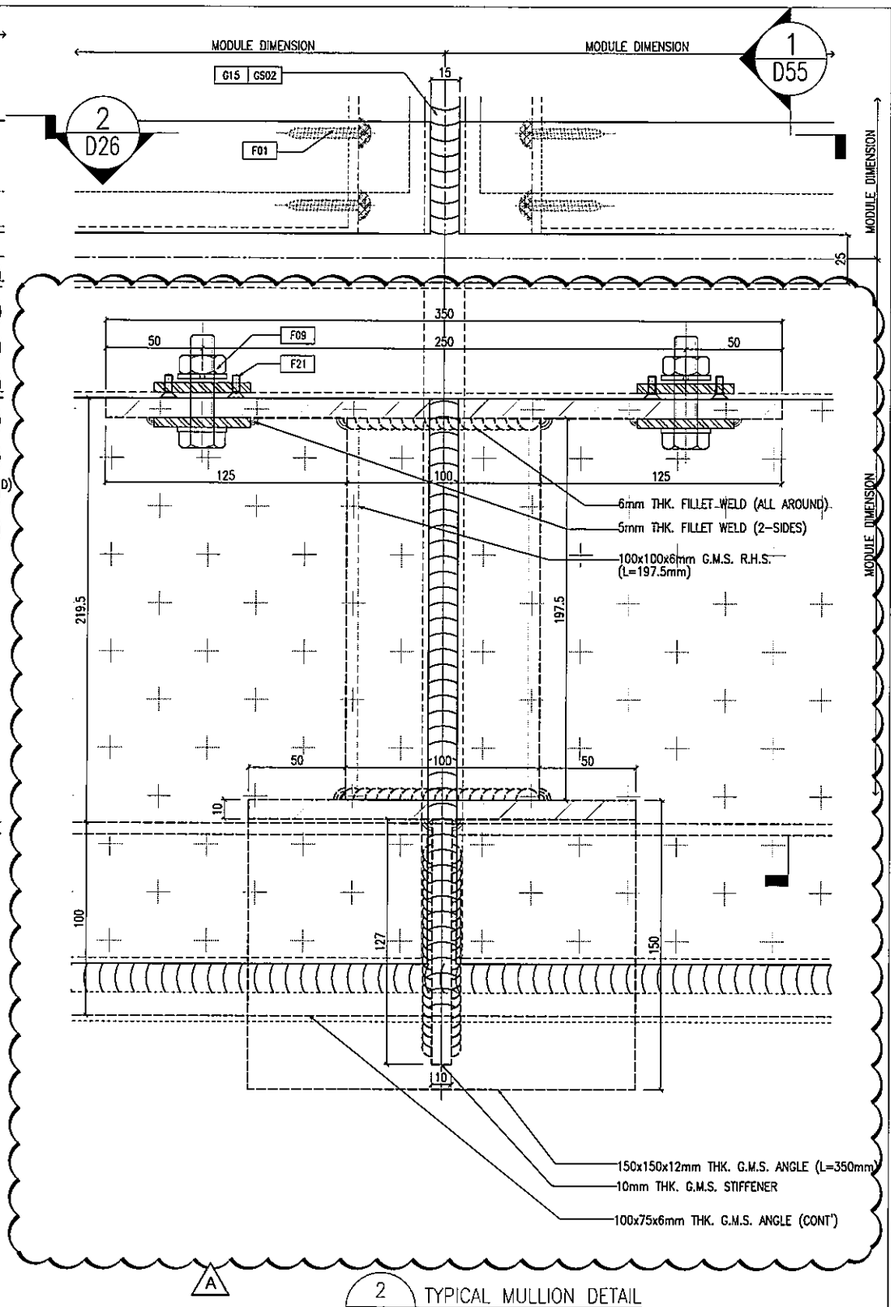

2 D26A TYPICAL MULLION DETAIL CURTAIN WALL

B.D. REF :

CLIENT :
信和置業有限公司
Sino Land Company Limited

ARCHITECT :
ronald lu & partners
Ronald Lu & Partners (HK) Ltd.
呂元祥建築師事務所(香港)有限公司

MAIN CONTRACTOR :
Gammon

STRUCTURAL ENGINEER :
AECOM

FACADE CONSULTANT:
AECOM

NOTE :
1. ALL DIMENSIONS ARE IN mm.
2. ALL ELEVATIONS ARE VIEWED FROM OUTSIDE.
3. ALL DIMENSIONS TO BE VERIFIED ON SITE BEFORE FABRICATION.

LEGEND :
X1 — DETAIL MARK NO.
X091 — REFER SHEET NO.
1. F.F.L. -- FINISHED FLOOR LEVEL
2. S.F.L. -- STRUCTURAL FLOOR LEVEL
3. (/R) -- REVERSED DETAIL

NO.	DATE	REVISED	BY
A	25/05/22	REVISED AS PER COMMENTS	LS

JOB NO. : J-858

PROJECT :
PROPOSED RESIDENTIAL DEVELOPMENT
AT TKOTL 70RP, PHASE 11, LOHAS PARK
TSEUNG KWAN O, N.T.

TITLE :
TYPICAL MULLION DETAIL
FOR CURTAIN WALL

DATE : 22-OCT-21 | SCALE : 1:1.5(A1)

DRAWN BY : | CHECKED BY :

美特鋁質有限公司
MIDI ALUMINIUM FABRICATOR LTD.
Units 6-8, Sunray Industrial Centre, 1/F
610 Cha Kwo Ling Road, Kowloon
Tel:23489211-4 Fax:(852)27727666

DWG NO. : J858-CW-026A | REV. : A

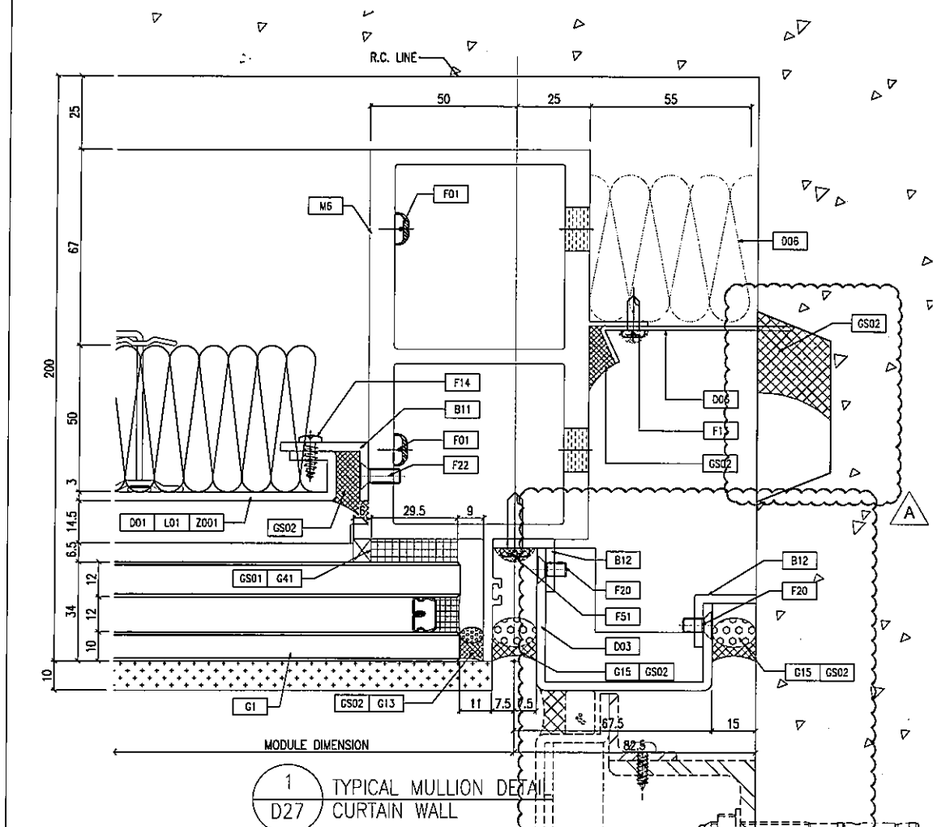

1 D27 TYPICAL MULLION DETAIL CURTAIN WALL

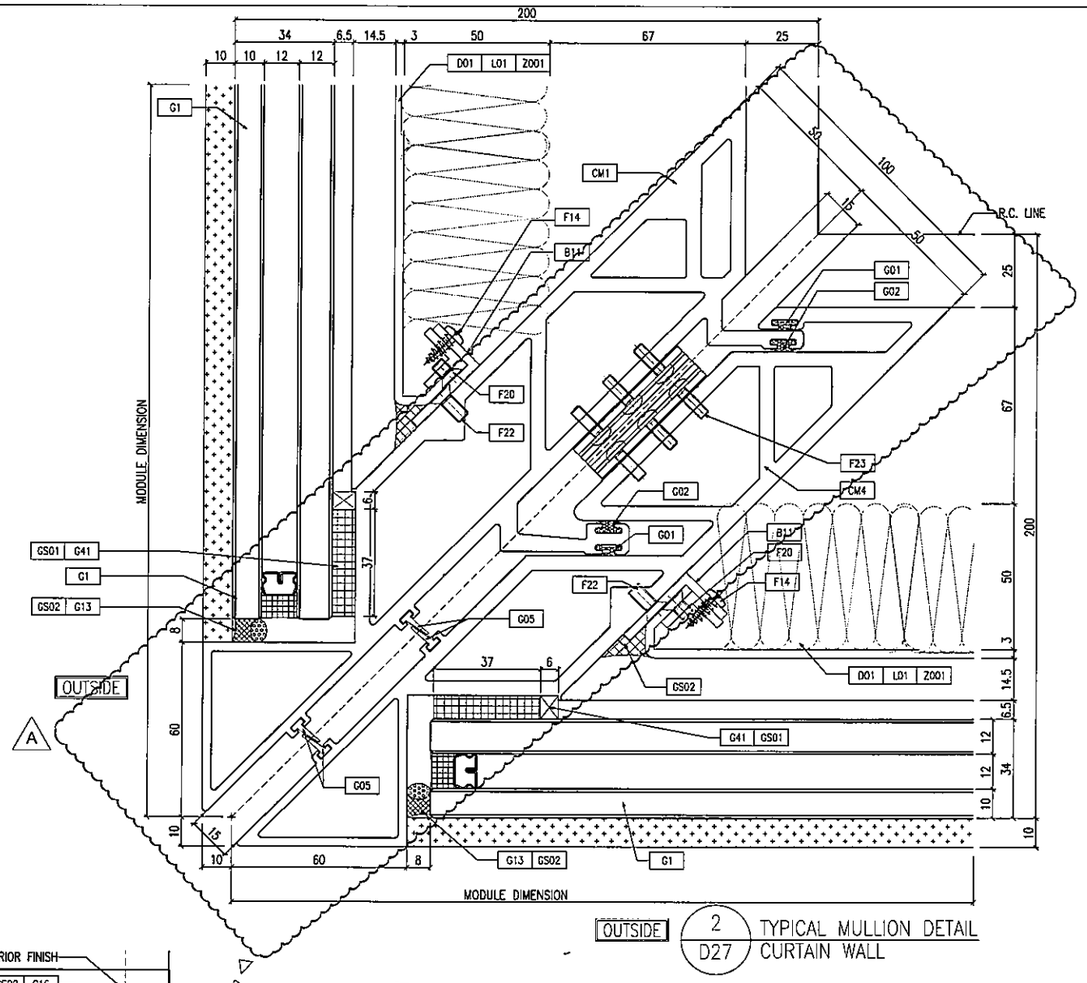

OUTSIDE 2 D27 TYPICAL MULLION DETAIL CURTAIN WALL

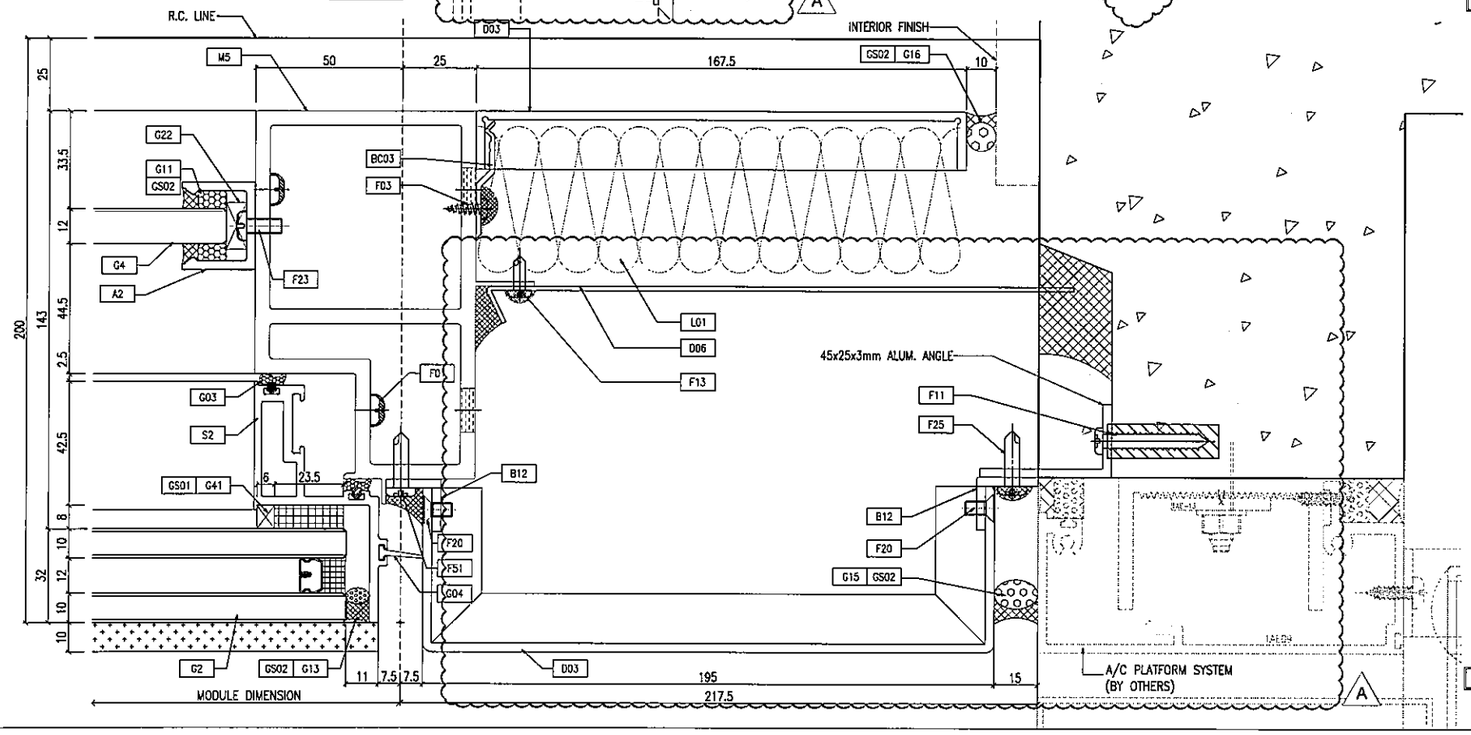

OUTSIDE 3 D27 TYPICAL MULLION DETAIL CURTAIN WALL

B.D. REF :

CLIENT :
信和置業有限公司
Sino Land Company Limited

ARCHITECT :
ronald lu & partners
Architects, Planners, Interior Designers
Ronald Lu & Partners (HK) Ltd.
呂元祥建築師事務所(香港)有限公司

MAIN CONTRACTOR :
Gammon

STRUCTURAL ENGINEER :
AECOM

FACADE CONSULTANT:
AECOM

NOTE :
1. ALL DIMENSIONS ARE IN mm.
2. ALL ELEVATIONS ARE VIEWED FROM OUTSIDE.
3. ALL DIMENSIONS TO BE VERIFIED ON SITE BEFORE FABRICATION.

LEGEND :
X1 / X001 — DETAIL MARK NO. / REFER SHEET NO.
1. F.F.L. -- FINISHED FLOOR LEVEL
2. S.F.L. -- STRUCTURAL FLOOR LEVEL
3. (R) -- REVERSED DETAIL

NO.	DATE	REVISED	BY
A	25/05/22	REVISED AS PER COMMENTS	LS

JOB NO. : J-858

PROJECT :
PROPOSED RESIDENTIAL DEVELOPMENT
AT TKOTL 70RP, PHASE 11, LOHAS PARK
TSEUNG KWAN O, N.T.

TITLE :
TYPICAL MULLION DETAIL
FOR CURTAIN WALL

DATE : 22-OCT-21 | SCALE : 1:1(A1)

DRAWN BY : | CHECKED BY :

美特鋁質有限公司
MIDI ALUMINIUM FABRICATOR LTD.
Units 6-8, Sunray Industrial Centre, 1/F
610 Cha Kwo Ling Road, Kowloon
Tel:23489211-4 Fax:(852)27727666

DWG NO. : J858-CW-D27 | REV. : A

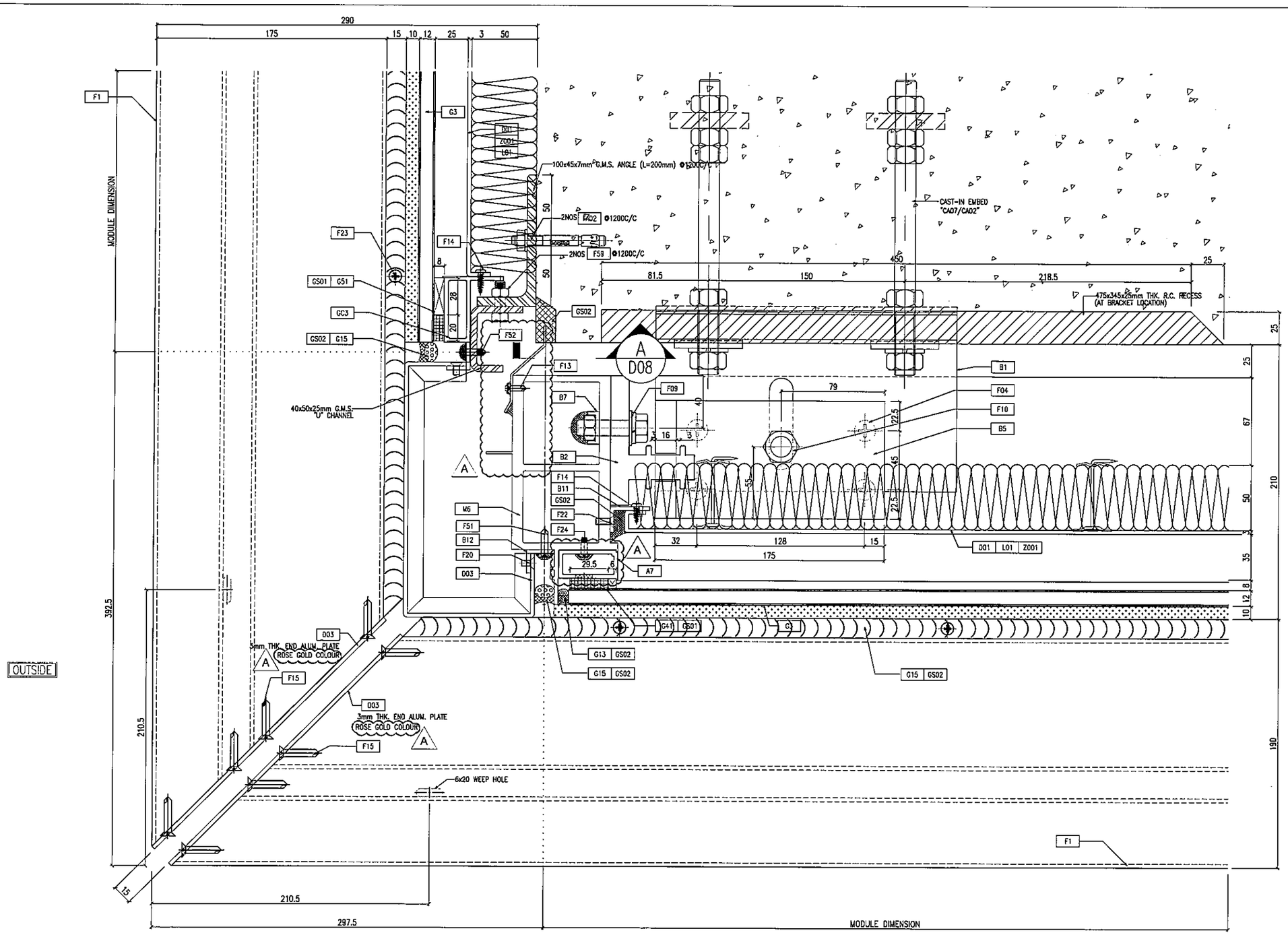

1 / D28 TYPICAL MULLION DETAIL CURTAIN WALL

B.D. REF :

CLIENT :
信和置業有限公司
Sino Land Company Limited

ARCHITECT :
ronald lu & partners
Architects . Planners . Interior Designers
Ronald Lu & Partners (HK) Ltd.
呂元祥建築師事務所(香港)有限公司

MAIN CONTRACTOR :
Gammon

STRUCTURAL ENGINEER :
AECOM

FACADE CONSULTANT:
AECOM

NOTE :
1. ALL DIMENSIONS ARE IN mm.
2. ALL ELEVATIONS ARE VIEWED FROM OUTSIDE.
3. ALL DIMENSIONS TO BE VERIFIED ON SITE BEFORE FABRICATION.

LEGEND :
X1 — DETAIL MARK NO.
X001 — REFER SHEET NO.
1. F.F.L. --FINISHED FLOOR LEVEL
2. S.F.L. --STRUCTURAL FLOOR LEVEL
3. (/R) --REVERSED DETAIL

NO.	DATE	REVISED	BY
A	25/05/22	REVISED AS PER COMMENTS	LS

JOB NO. : J-858

PROJECT :
PROPOSED RESIDENTIAL DEVELOPMENT
AT TKOTL 70RP, PHASE 11, LOHAS PARK
TSEUNG KWAN O, N.T.

TITLE :
TYPICAL MULLION DETAIL
FOR CURTAIN WALL

DATE : 22-OCT-21 | SCALE : 1:1.5(A1)

DRAWN BY : | CHECKED BY :

美特鋁質有限公司
MIDI ALUMINIUM FABRICATOR LTD.
Units 6-8, Sunray Industrial Centre, 1/F
610 Cha Kwo Ling Road, Kowloon
Tel:23489211-4 Fax:(852)27727666

DWG NO. : J858-CW-D28 | REV. : A

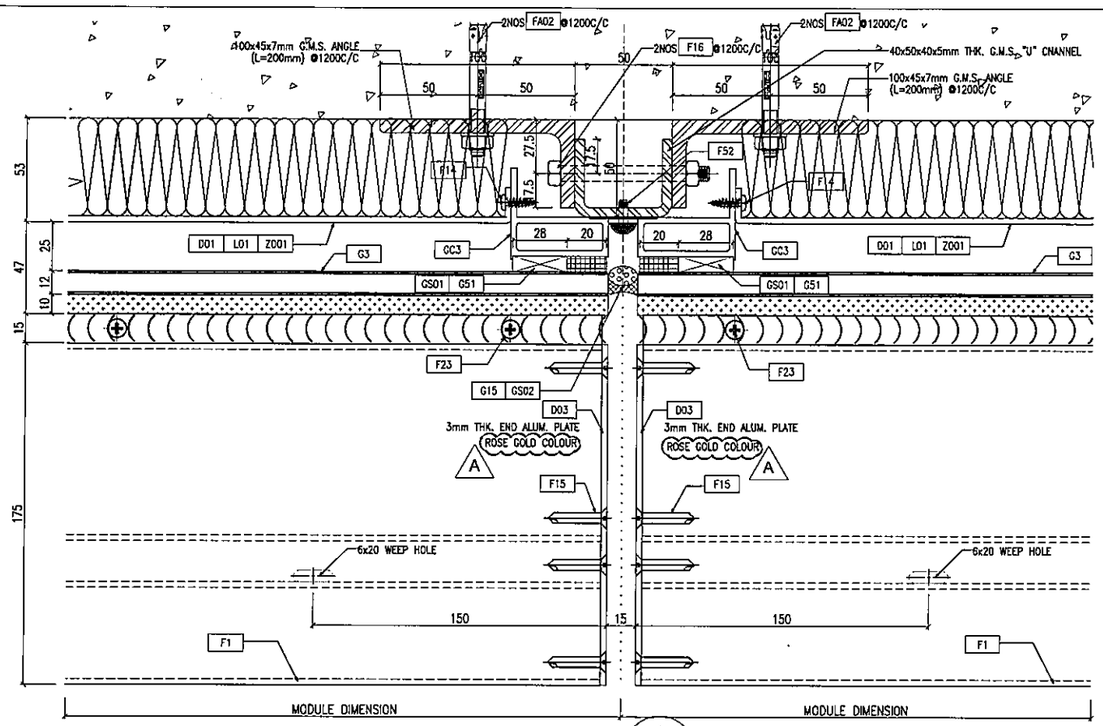

1 D29 TYPICAL MULLION DETAIL CURTAIN WALL

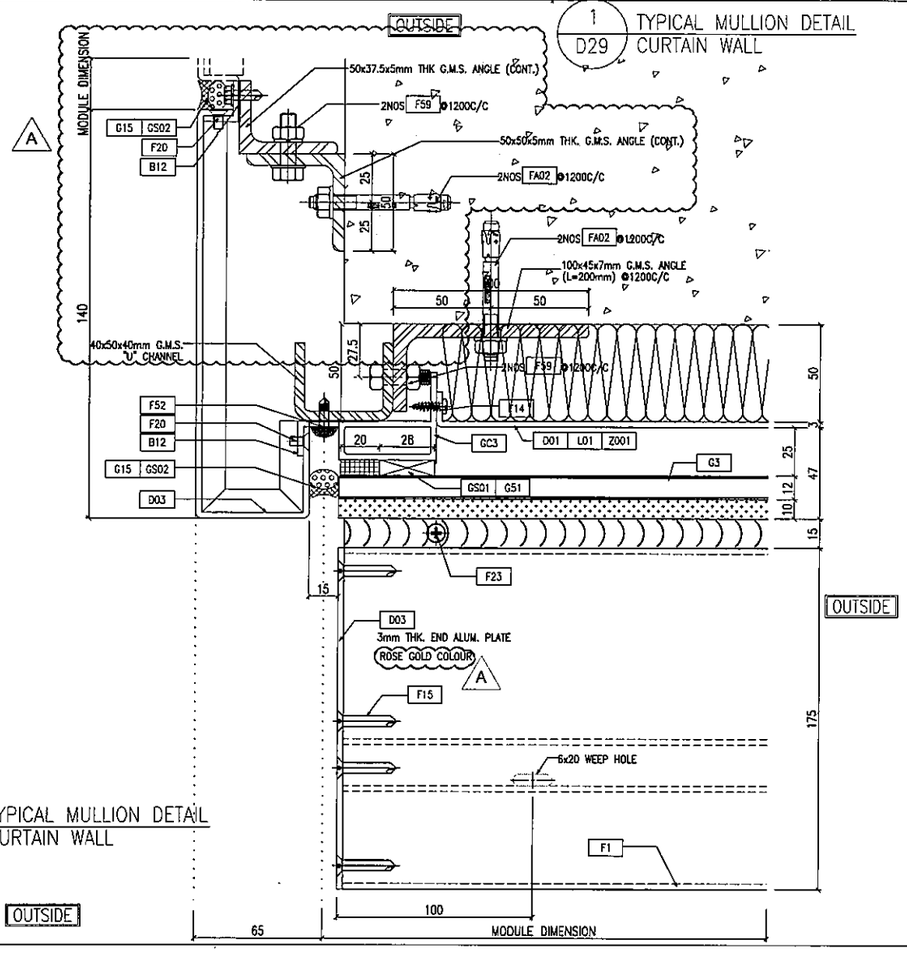

3 D29 TYPICAL MULLION DETAIL CURTAIN WALL

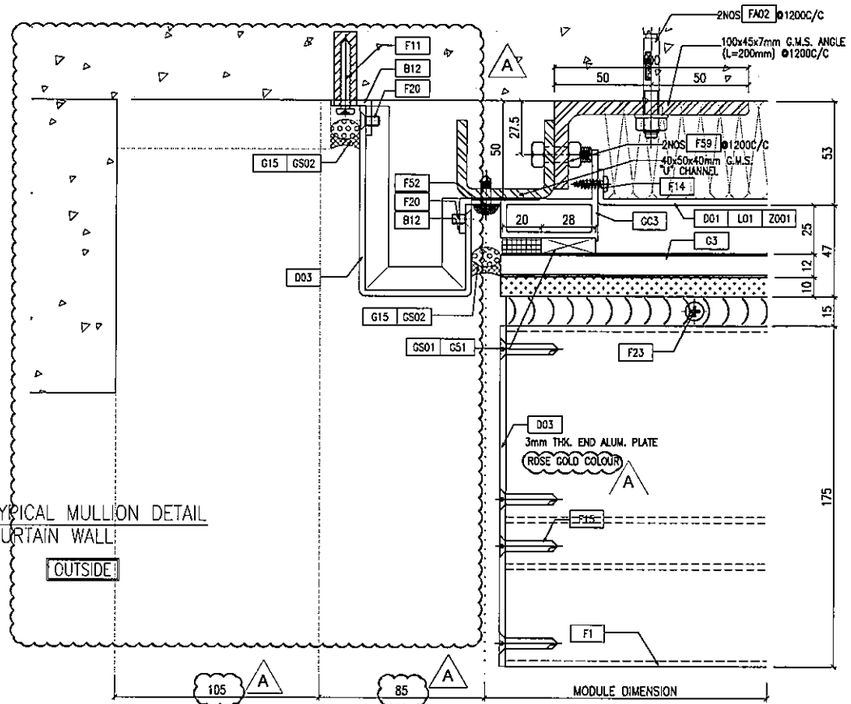

2 D29 TYPICAL MULLION DETAIL CURTAIN WALL

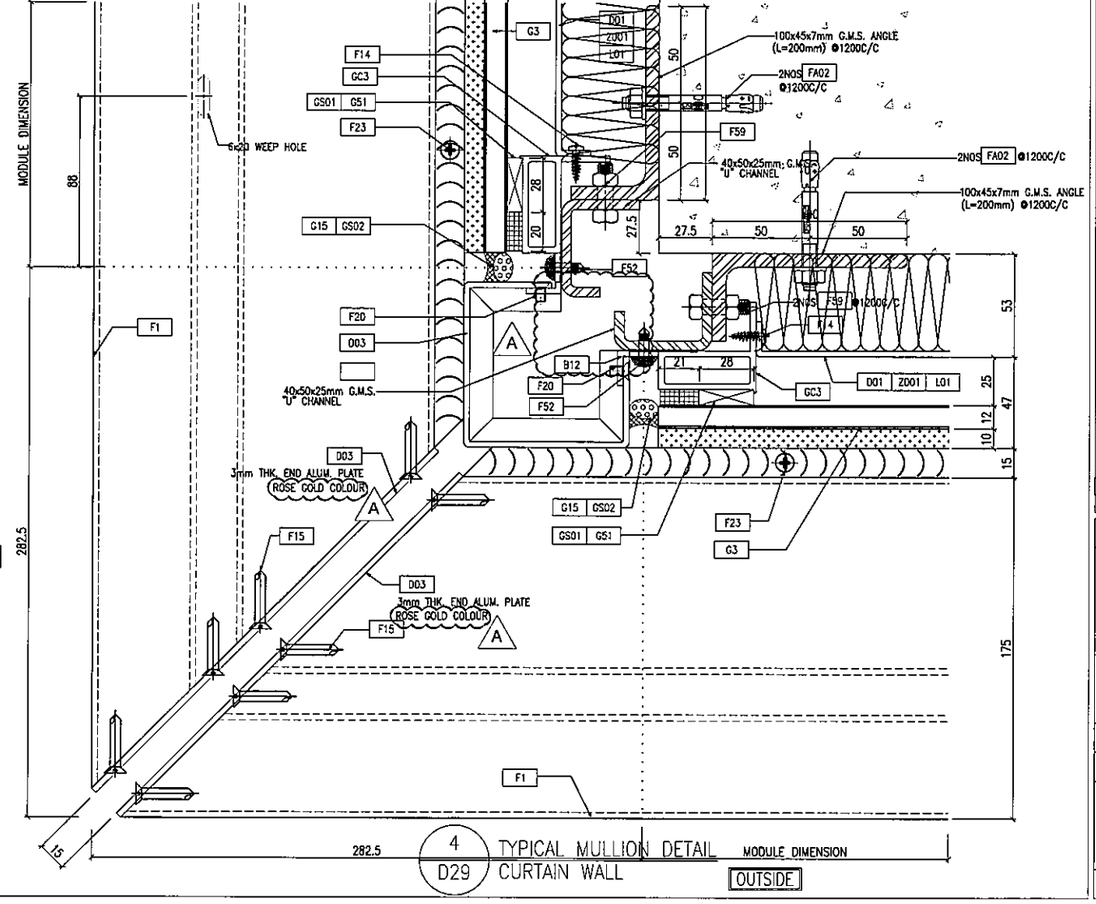

4 D29 TYPICAL MULLION DETAIL CURTAIN WALL

B.D. REF :

CLIENT :
信和置業有限公司
Sino Land Company Limited

ARCHITECT :
ronald lu & partners
Architects . Planners . Interior Designers
Ronald Lu & Partners (HK) Ltd.
呂元祥建築師事務所(香港)有限公司

MAIN CONTRACTOR :
Gammon

STRUCTURAL ENGINEER :
AECOM

FACADE CONSULTANT:
AECOM

NOTE :
1. ALL DIMENSIONS ARE IN mm.
2. ALL ELEVATIONS ARE VIEWED FROM OUTSIDE.
3. ALL DIMENSIONS TO BE VERIFIED ON SITE BEFORE FABRICATION.

LEGEND :
X1 — DETAIL MARK NO.
X001 — REFER SHEET NO.

1. F.F.L. --FINISHED FLOOR LEVEL
2. S.F.L. --STRUCTURAL FLOOR LEVEL
3. /R --REVERSED DETAIL

NO.	DATE	REVISED	BY
A	25/05/22	REVISED AS PER COMMENTS	LS

JOB NO. : J-858

PROJECT :
PROPOSED RESIDENTIAL DEVELOPMENT
AT TKOTL 70RP, PHASE 11, LOHAS PARK
TSEUNG KWAN O, N.T.

TITLE :
TYPICAL MULLION DETAIL
FOR CURTAIN WALL

DATE : 22-OCT-21	SCALE : 1:1.5(A1)
DRAWN BY :	CHECKED BY :

美特鋁質有限公司
MIDI ALUMINIUM FABRICATOR LTD.
Units 6-8, Sunray Industrial Centre, 1/F
610 Cha Kwo Ling Road, Kowloon
Tel:23489211-4 Fax:(852)27727666

DWG NO. : J858-CW-D29 REV. : A

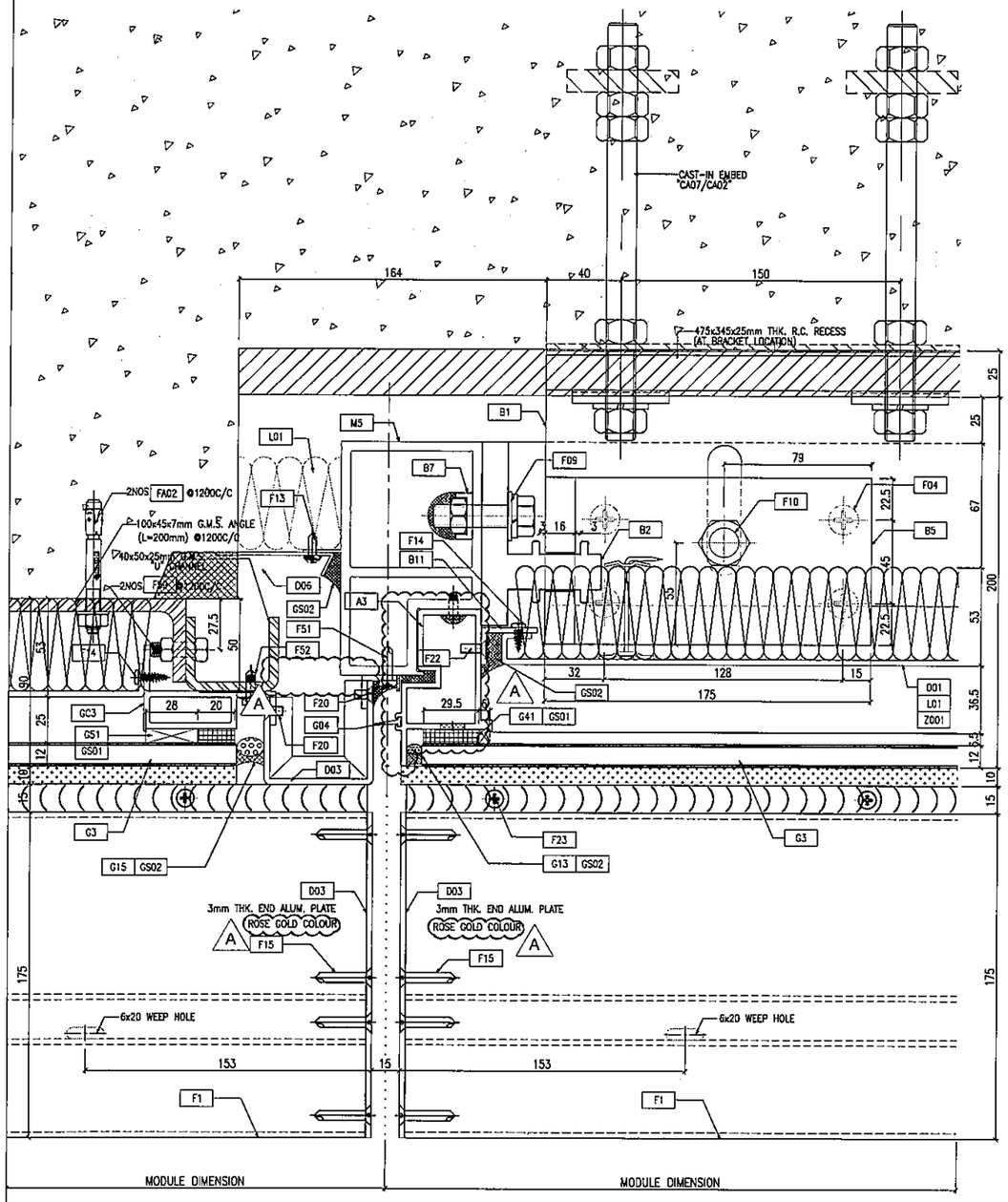

1 / D30 TYPICAL MULLION DETAIL CURTAIN WALL

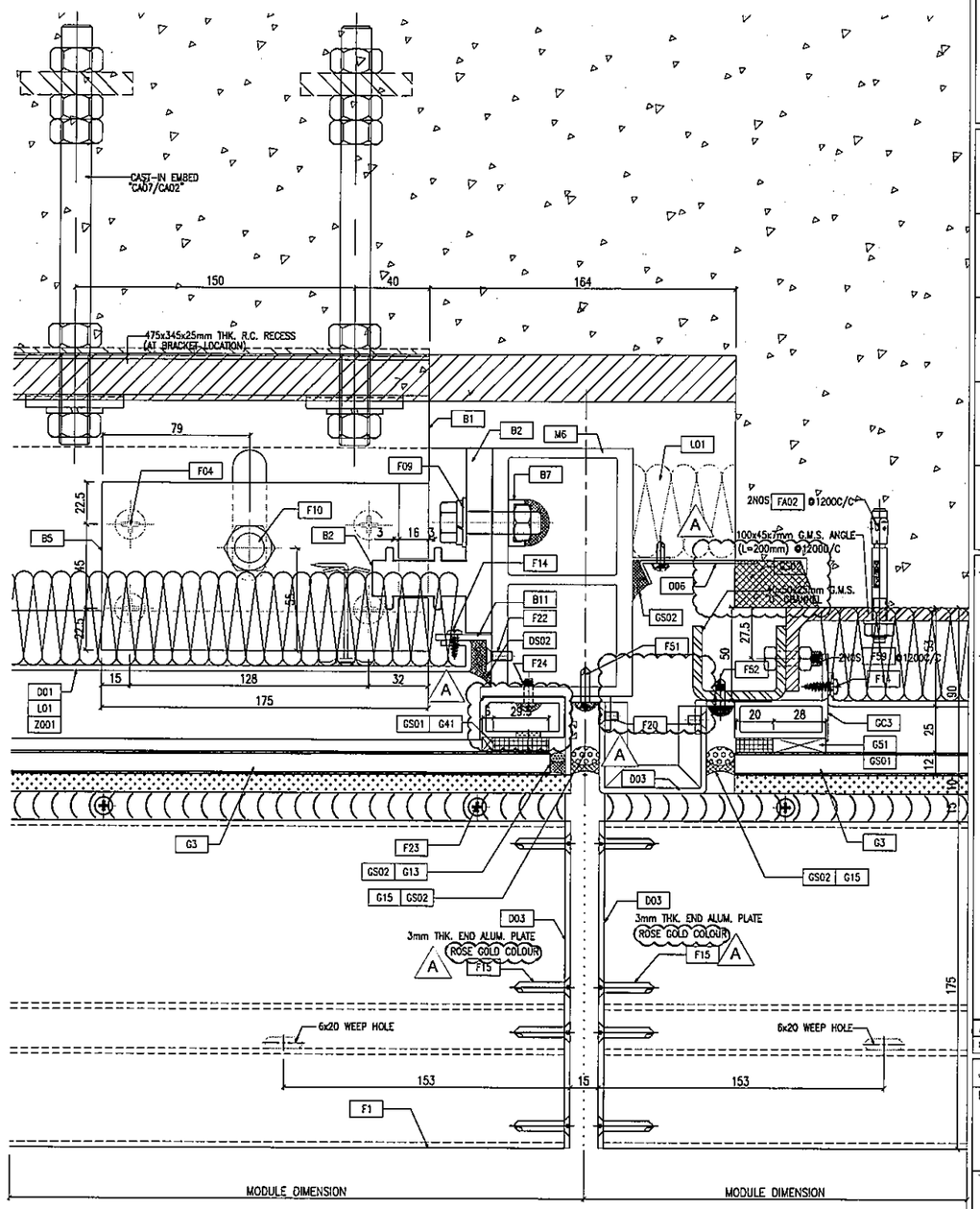

2 / D30 TYPICAL MULLION DETAIL CURTAIN WALL

B.D. REF :

CLIENT :
信和置業有限公司
Sino Land Company Limited

ARCHITECT :
ronald lu & partners
Architects . Planners . Interior Designers
Ronald Lu & Partners (HK) Ltd.
呂元祥建築師事務所(香港)有限公司

MAIN CONTRACTOR :
Gammon

STRUCTURAL ENGINEER :
AECOM

FACADE CONSULTANT:
AECOM

NOTE :
1. ALL DIMENSIONS ARE IN mm.
2. ALL ELEVATIONS ARE VIEWED FROM OUTSIDE.
3. ALL DIMENSIONS TO BE VERIFIED ON SITE BEFORE FABRICATION.

LEGEND :
X1 / X001 — DETAIL MARK NO. / REFER SHEET NO.
1. F.F.L. --FINISHED FLOOR LEVEL
2. S.F.L. --STRUCTURAL FLOOR LEVEL
3. /R --REVERSED DETAIL

NO.	DATE	REVISED	BY
A	25/05/22	REVISED AS PER COMMENTS	LS

JOB NO. : J-858

PROJECT :
PROPOSED RESIDENTIAL DEVELOPMENT
AT TKOTL 70RP, PHASE 11, LOHAS PARK
TSEUNG KWAN O, N.T.

TITLE :
TYPICAL MULLION DETAIL
FOR CURTAIN WALL

DATE : 22-OCT-21 | SCALE : 1:1.5(A1)

DRAWN BY : | CHECKED BY :

美特鋁質有限公司
MIDI ALUMINIUM FABRICATOR LTD.
Units 6-8, Sunray Industrial Centre, 1/F
610 Cha Kwo Ling Road, Kowloon
Tel:23489211-4 Fax:(852)27727666

DWG NO. : J858-CW-D30 | REV. : A

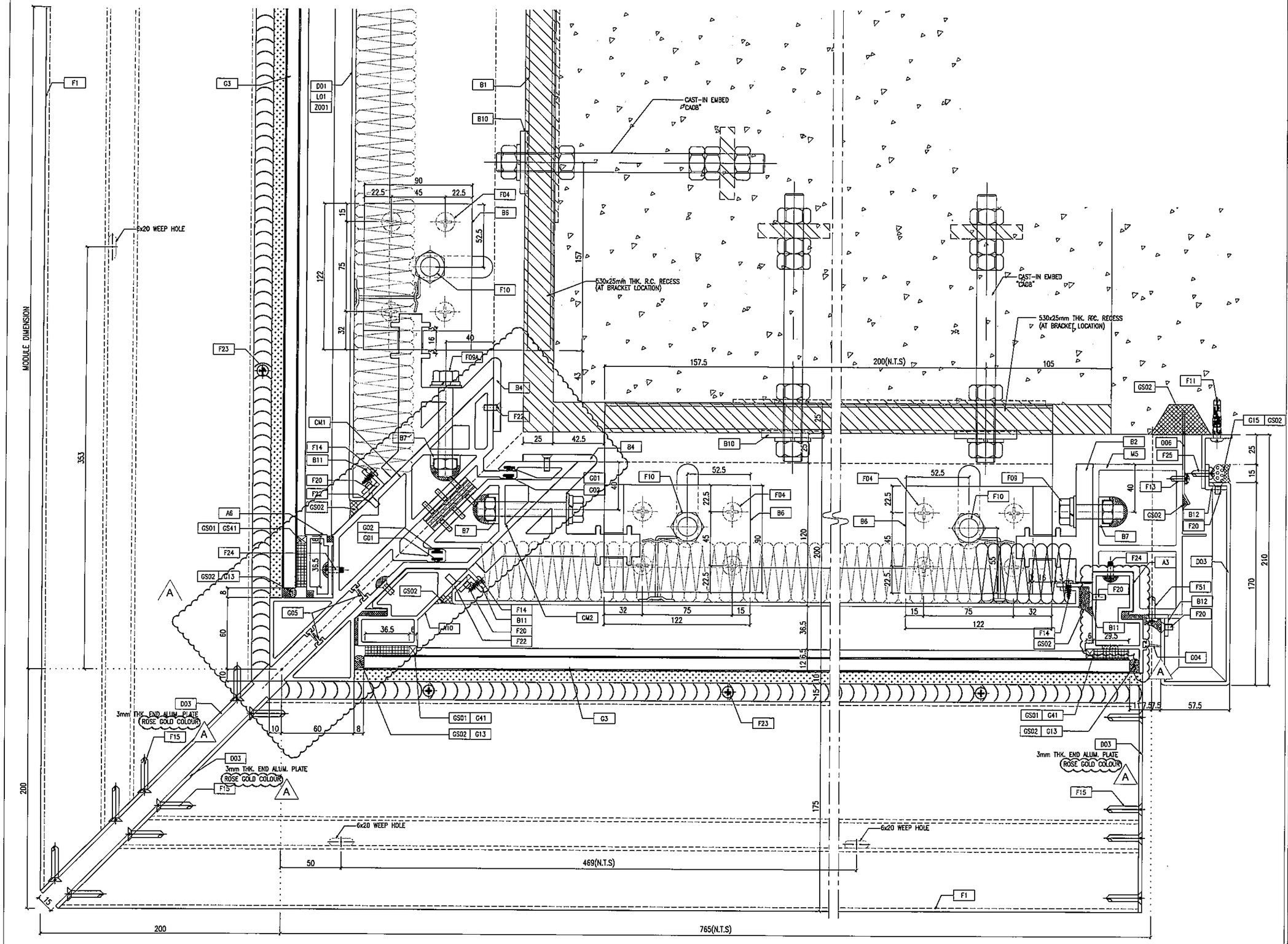

OUTSIDE

1/D31 TYPICAL MULLION DETAIL CURTAIN WALL

B.D. REF :

CLIENT :
信和置業有限公司
Sino Land Company Limited

ARCHITECT :
ronald lu & partners
Architects Planners Interior Designers
Ronald Lu & Partners (HK) Ltd.
呂元祥建築師事務所(香港)有限公司

MAIN CONTRACTOR :
Gammon

STRUCTURAL ENGINEER :
AECOM

FACADE CONSULTANT:
AECOM

NOTE :
1. ALL DIMENSIONS ARE IN mm.
2. ALL ELEVATIONS ARE VIEWED FROM OUTSIDE.
3. ALL DIMENSIONS TO BE VERIFIED ON SITE BEFORE FABRICATION.

LEGEND :
X1 — DETAIL MARK NO.
X001 — REFER SHEET NO.

1. F.F.L. --FINISHED FLOOR LEVEL
2. S.F.L. --STRUCTURAL FLOOR LEVEL
3. /R --REVERSED DETAIL

NO.	DATE	REVISED	BY
A	25/05/22	REVISED AS PER COMMENTS	LS

JOB NO. : J-858

PROJECT :
PROPOSED RESIDENTIAL DEVELOPMENT
AT TKOTL 70RP, PHASE 11, LOHAS PARK
TSEUNG KWAN O, N.T.

TITLE :
TYPICAL MULLION DETAIL
FOR CURTAIN WALL

DATE : 22-OCT-21 | SCALE : 1:1.5(A1)

DRAWN BY : | CHECKED BY :

美特鋁質有限公司
MIDI ALUMINIUM FABRICATOR LTD.
Units 6-8, Sunray Industrial Centre, 1/F
610 Cha Kwo Ling Road, Kowloon
Tel:23489211-4 Fax:(852)27727666

DWG NO. : J858-CW-D31 | REV. : A

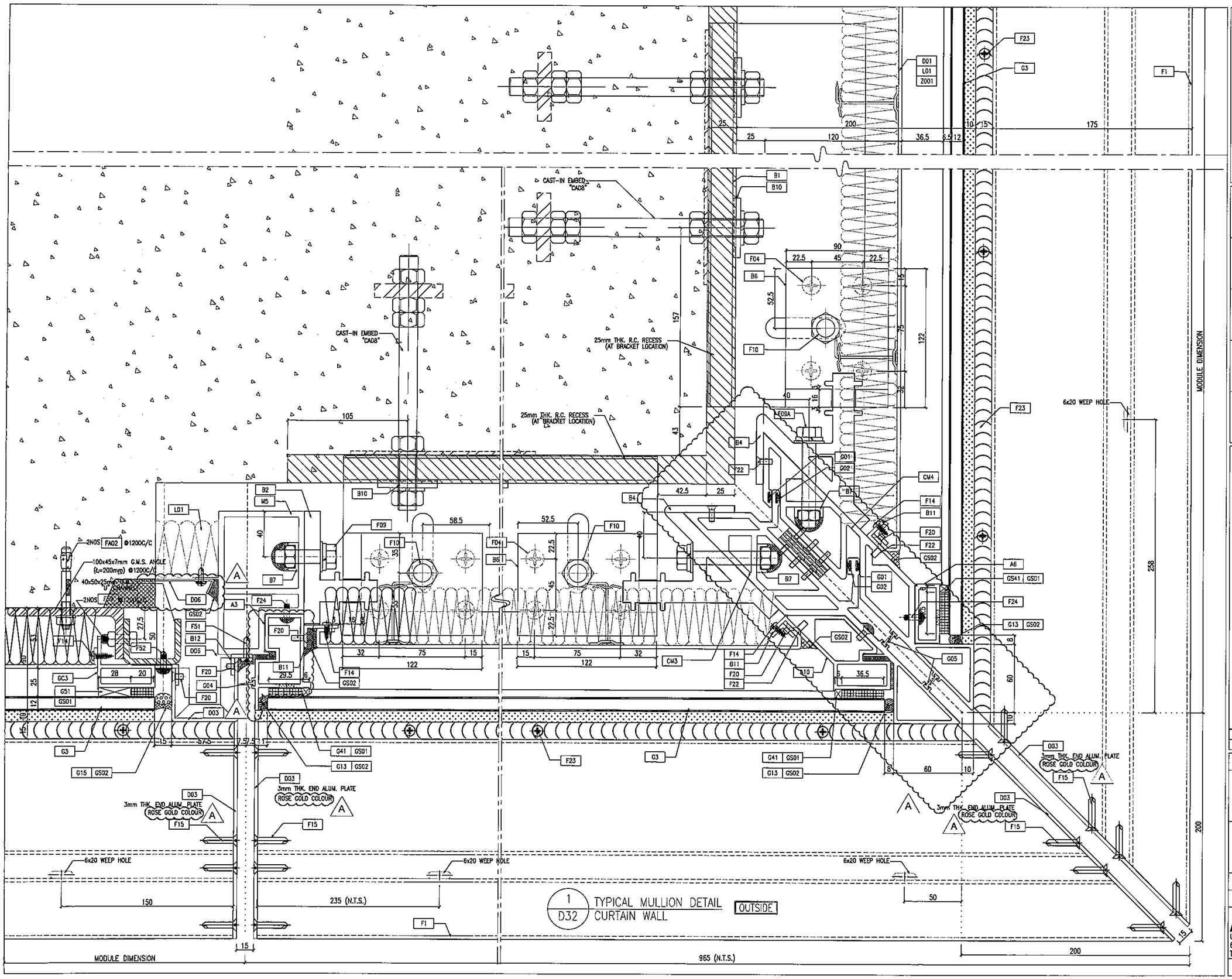

B.D. REF :

CLIENT :
信和置業有限公司
Sino Land Company Limited

ARCHITECT :
ronald lu & partners
Architects, Planners, Interior Designers
Ronald Lu & Partners (HK) Ltd.
呂元祥建築師事務所(香港)有限公司

MAIN CONTRACTOR :
Gammon

STRUCTURAL ENGINEER :
AECOM

FACADE CONSULTANT:
AECOM

NOTE :
1. ALL DIMENSIONS ARE IN mm.
2. ALL ELEVATIONS ARE VIEWED FROM OUTSIDE.
3. ALL DIMENSIONS TO BE VERIFIED ON SITE BEFORE FABRICATION.

LEGEND :
X1 — DETAIL MARK NO.
X001 — REFER SHEET NO.

1. F.F.L. -- FINISHED FLOOR LEVEL
2. S.F.L. -- STRUCTURAL FLOOR LEVEL
3. (R) -- REVERSED DETAIL

NO.	DATE	REVISED	BY
A	25/05/22	REVISED AS PER COMMENTS	LS

JOB NO. : J-858

PROJECT :
PROPOSED RESIDENTIAL DEVELOPMENT
AT TKOTL 70RP, PHASE 11, LOHAS PARK
TSEUNG KWAN O, N.T.

TITLE :
TYPICAL MULLION DETAIL
FOR CURTAIN WALL

DATE : 22-OCT-21 | SCALE : 1:1.5(A1)

DRAWN BY : | CHECKED BY :

美特鋁質有限公司
MIDI ALUMINIUM FABRICATOR LTD.
Units 6-8, Sunray Industrial Centre, 1/F
610 Cha Kwo Ling Road, Kowloon
Tel:23489211-4 Fax:(852)27727666

DWG NO. : J858-CW-D32 | REV. : A

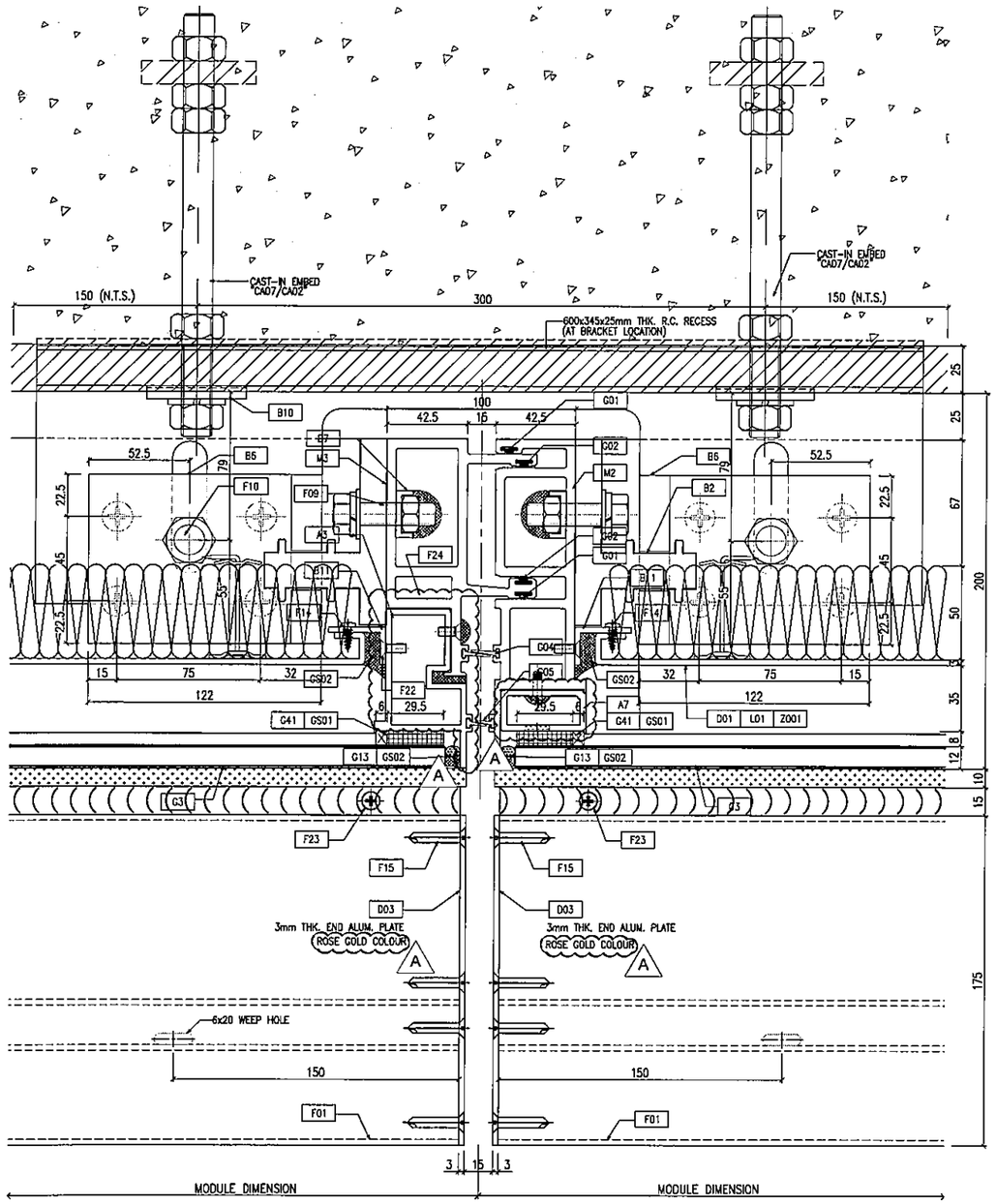

1 / D33 TYPICAL MULLION DETAIL CURTAIN WALL

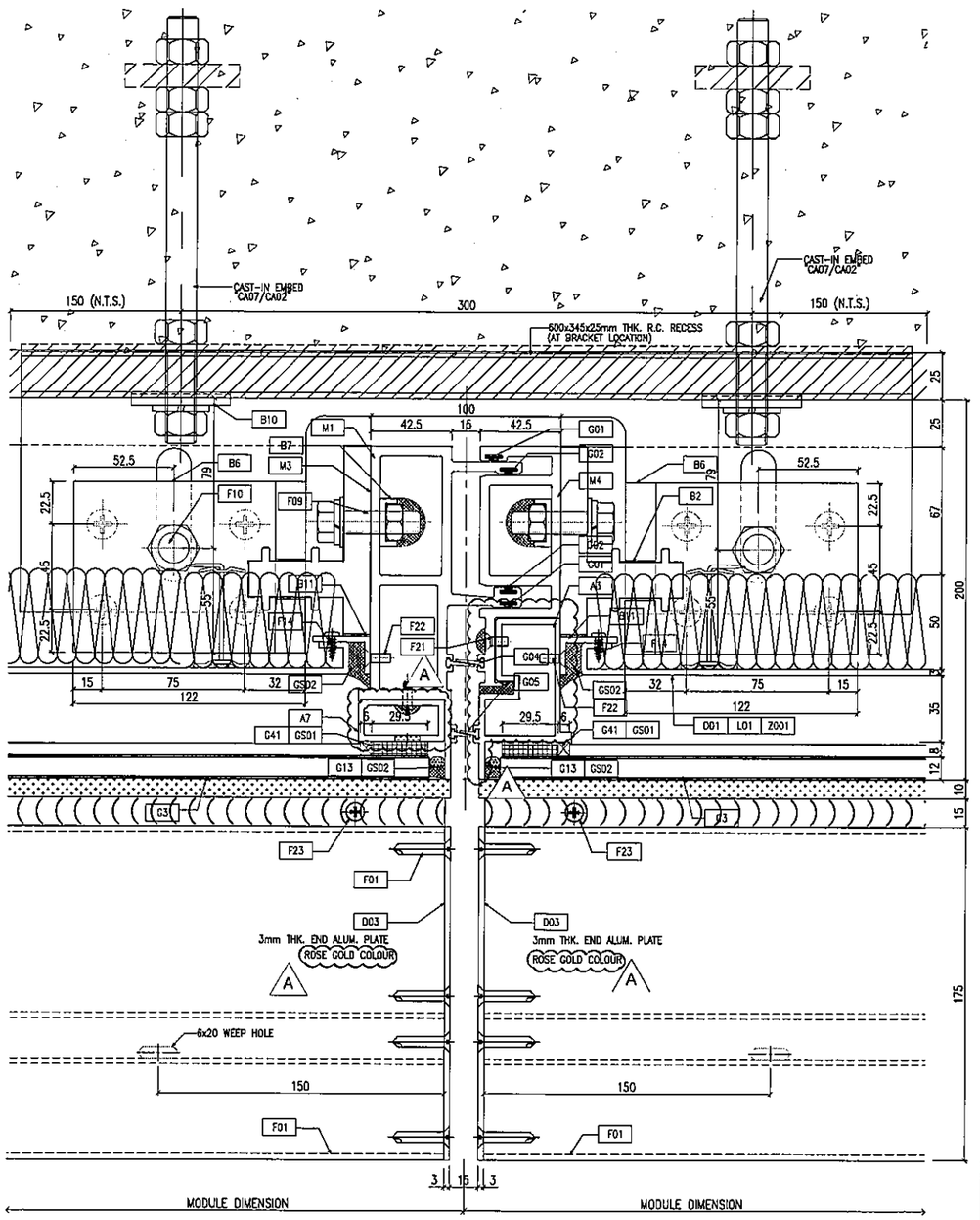

2 / D33 TYPICAL MULLION DETAIL CURTAIN WALL

B.D. REF :

CLIENT :
信和置業有限公司
Sino Land Company Limited

ARCHITECT :
ronald lu & partners
Architects . Planners . Interior Designers
Ronald Lu & Partners (HK) Ltd.
呂元祥建築師事務所(香港)有限公司

MAIN CONTRACTOR :
Gammon

STRUCTURAL ENGINEER :
AECOM

FACADE CONSULTANT:
AECOM

NOTE :
1. ALL DIMENSIONS ARE IN mm.
2. ALL ELEVATIONS ARE VIEWED FROM OUTSIDE.
3. ALL DIMENSIONS TO BE VERIFIED ON SITE BEFORE FABRICATION.

LEGEND :
- X1 / X001 — DETAIL MARK NO. / REFER SHEET NO.
1. F.F.L. --FINISHED FLOOR LEVEL
2. S.F.L. --STRUCTURAL FLOOR LEVEL
3. /R --REVERSED DETAIL

NO.	DATE	REVISED	BY
A	25/05/22	REVISED AS PER COMMENTS	LS

JOB NO. : J-858

PROJECT :
PROPOSED RESIDENTIAL DEVELOPMENT
AT TKOTL 70RP, PHASE 11, LOHAS PARK
TSEUNG KWAN O, N.T.

TITLE :
TYPICAL MULLION DETAIL
FOR CURTAIN WALL

DATE : 22-OCT-21 | SCALE : 1:1.5(A1)
DRAWN BY : | CHECKED BY :

美特鋁質有限公司
MIDI ALUMINIUM FABRICATOR LTD.
Units 6-8, Sunray Industrial Centre, 1/F
610 Cha Kwo Ling Road, Kowloon
Tel:23489211-4 Fax:(852)27727666

DWG NO. : J858-CW-D33 | REV. : A

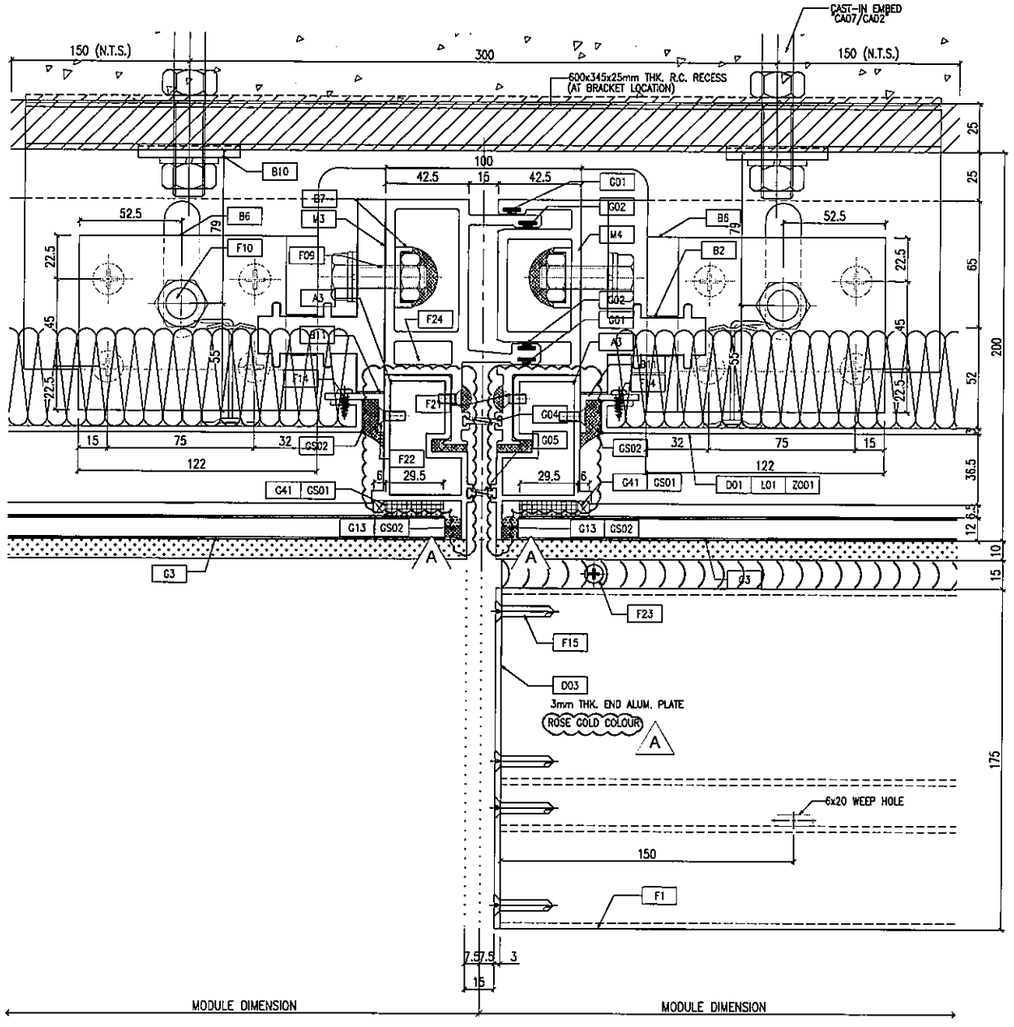

1 / D34 TYPICAL MULLION DETAIL CURTAIN WALL

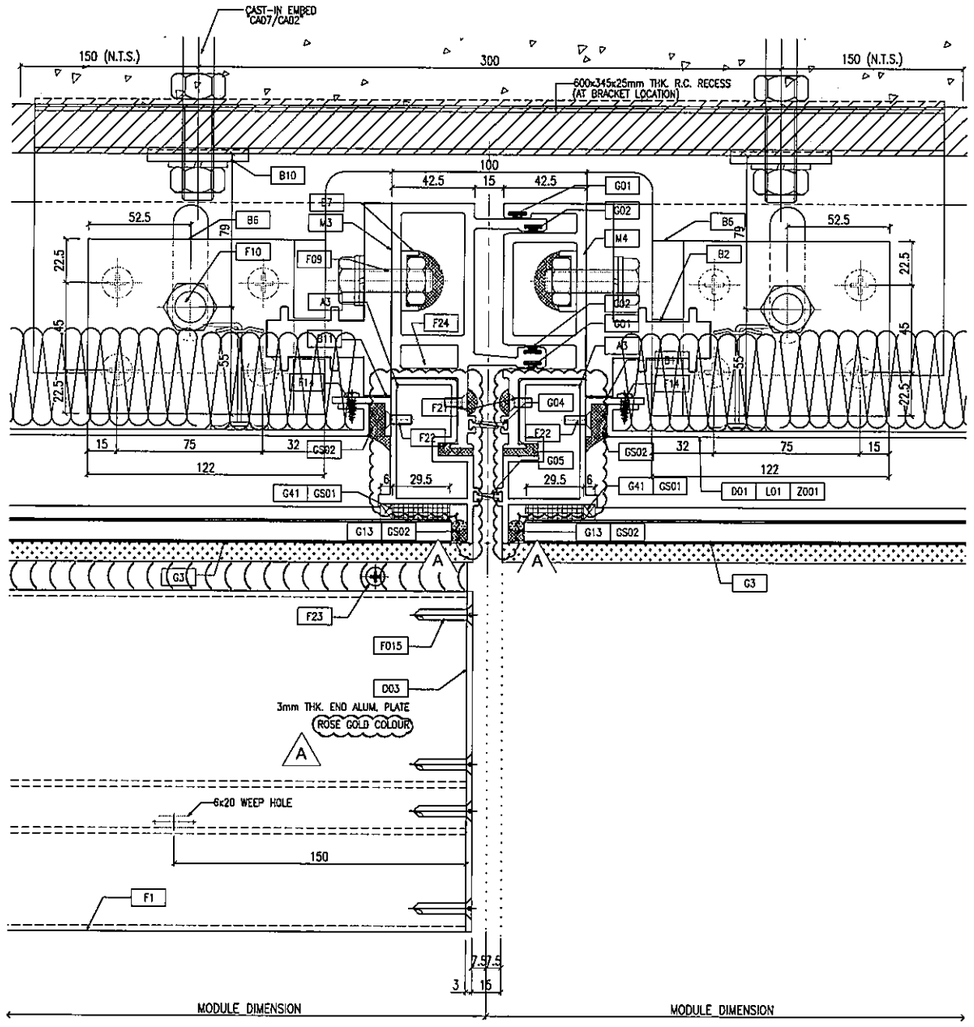

2 / D34 TYPICAL MULLION DETAIL CURTAIN WALL

B.D. REF :

CLIENT :
信和置業有限公司
Sino Land Company Limited

ARCHITECT :
ronald lu & partners
Architects . Planners . Interior Designers
Ronald Lu & Partners (HK) Ltd.
呂元祥建築師事務所(香港)有限公司

MAIN CONTRACTOR :
Gammon

STRUCTURAL ENGINEER :
AECOM

FACADE CONSULTANT:
AECOM

NOTE :
1. ALL DIMENSIONS ARE IN mm.
2. ALL ELEVATIONS ARE VIEWED FROM OUTSIDE.
3. ALL DIMENSIONS TO BE VERIFIED ON SITE BEFORE FABRICATION.

LEGEND :
X1 — DETAIL MARK NO.
XOO1 — REFER SHEET NO.
1. F.F.L. --FINISHED FLOOR LEVEL
2. S.F.L. --STRUCTURAL FLOOR LEVEL
3. /R --REVERSED DETAIL

NO.	DATE	REVISED	BY
A	25/05/22	REVISED AS PER COMMENTS	LS

JOB NO. : J-858

PROJECT :
PROPOSED RESIDENTIAL DEVELOPMENT
AT TKOTL 70RP, PHASE 11, LOHAS PARK
TSEUNG KWAN O, N.T.

TITLE :
TYPICAL MULLION DETAIL
FOR CURTAIN WALL

DATE : 22-OCT-21 | SCALE : 1:1.5(A1)

DRAWN BY : | CHECKED BY :

美特鋁質有限公司
MIDI ALUMINIUM FABRICATOR LTD.
Units 6-8, Sunray Industrial Centre, 1/F
610 Cha Kwo Ling Road, Kowloon
Tel:23489211-4 Fax:(852)27727666

DWG NO. : J858-CW-D34 | REV. : A

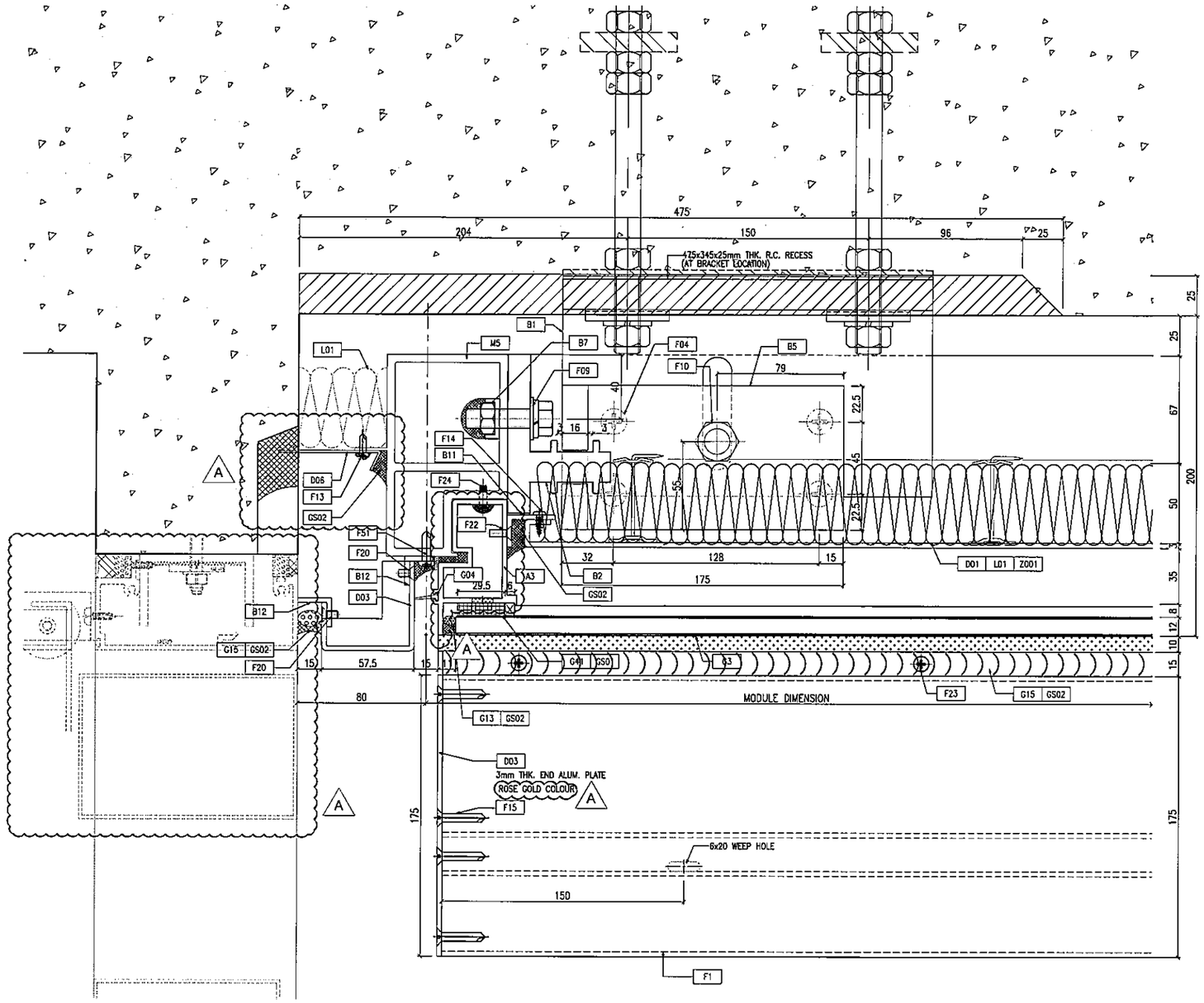

1 / D35 TYPICAL MULLION DETAIL CURTAIN WALL

B.D. REF :

CLIENT :
信和置業有限公司
Sino Land Company Limited

ARCHITECT :
ronald lu & partners
Architects . Planners . Interior Designers
Ronald Lu & Partners (HK) Ltd.
呂元祥建築師事務所(香港)有限公司

MAIN CONTRACTOR :
Gammon

STRUCTURAL ENGINEER :
AECOM

FACADE CONSULTANT:
AECOM

NOTE :
1. ALL DIMENSIONS ARE IN mm.
2. ALL ELEVATIONS ARE VIEWED FROM OUTSIDE.
3. ALL DIMENSIONS TO BE VERIFIED ON SITE BEFORE FABRICATION.

LEGEND :
X1 — DETAIL MARK NO.
X001 — REFER SHEET NO.
1. F.F.L. --- FINISHED FLOOR LEVEL
2. S.F.L. --- STRUCTURAL FLOOR LEVEL
3. /R --- REVERSED DETAIL

NO.	DATE	REVISED	BY
A	25/05/22	REVISED AS PER COMMENTS	LS

JOB NO. : J-858

PROJECT :
PROPOSED RESIDENTIAL DEVELOPMENT
AT TKOTL 70RP, PHASE 11, LOHAS PARK
TSEUNG KWAN O, N.T.

TITLE :
TYPICAL MULLION DETAIL
FOR CURTAIN WALL

DATE : 22-OCT-21 | SCALE : 1:1.5(A1)

DRAWN BY : | CHECKED BY :

美特鋁質有限公司
MIDI ALUMINIUM FABRICATOR LTD.
Units 6-8, Sunray Industrial Centre, 1/F
610 Cha Kwo Ling Road, Kowloon
Tel:23489211-4 Fax:(852)27727666

DWG NO. : J858-CW-D34 | REV. : A

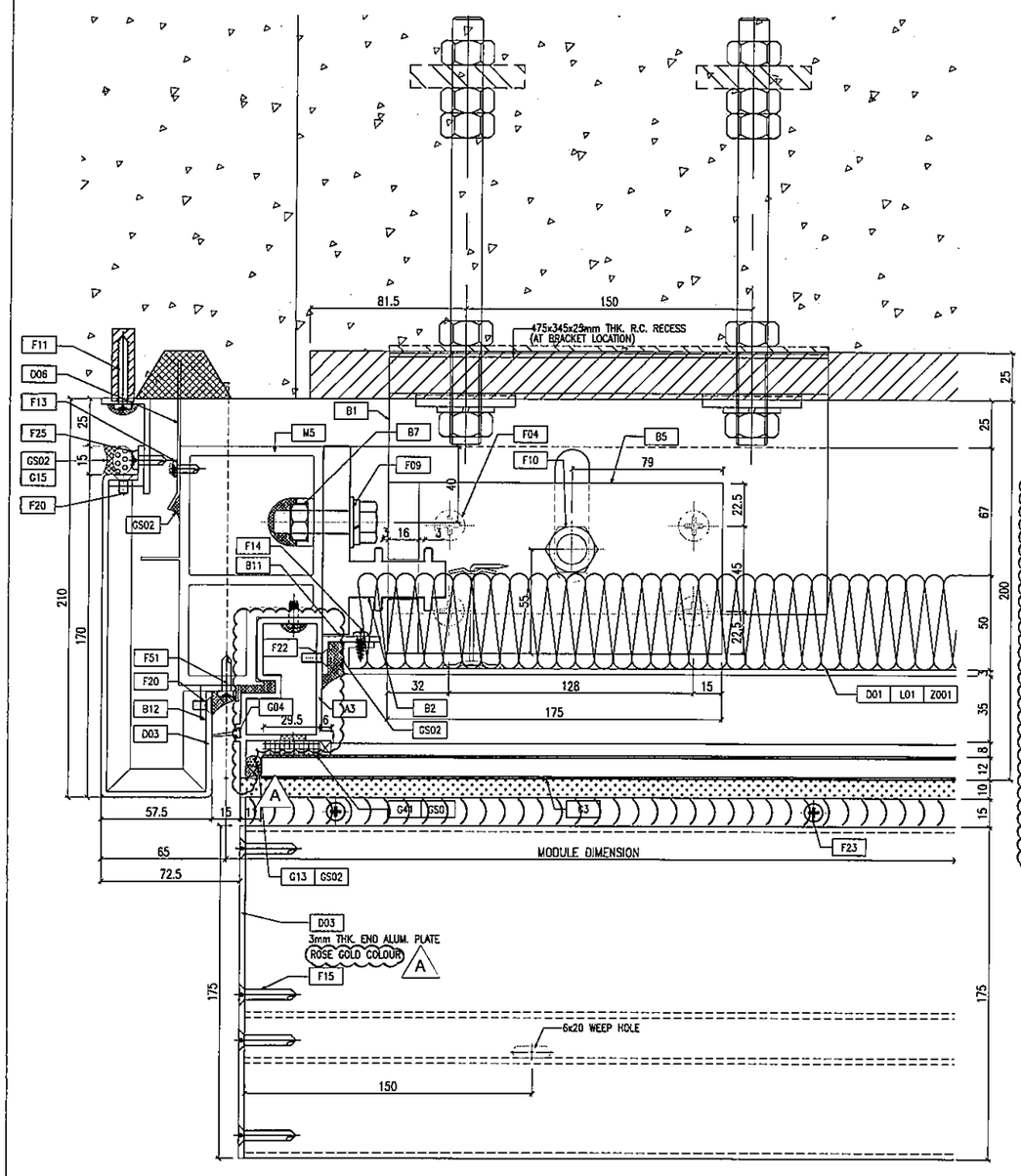

OUTSIDE

1 / D36 TYPICAL MULLION DETAIL CURTAIN WALL

OUTSIDE

2 / D36 TYPICAL MULLION DETAIL CURTAIN WALL

B.D. REF :

CLIENT :
信和置業有限公司
Sino Land Company Limited

ARCHITECT :
ronald lu & partners
Architects . Planners . Interior Designers
Ronald Lu & Partners (HK) Ltd.
呂元祥建築師事務所(香港)有限公司

MAIN CONTRACTOR :
Gammon

STRUCTURAL ENGINEER :
AECOM

FACADE CONSULTANT:
AECOM

NOTE :
1. ALL DIMENSIONS ARE IN mm.
2. ALL ELEVATIONS ARE VIEWED FROM OUTSIDE.
3. ALL DIMENSIONS TO BE VERIFIED ON SITE BEFORE FABRICATION.

LEGEND :
X1 / X001 — DETAIL MARK NO. / REFER SHEET NO.
1. F.F.L. -- FINISHED FLOOR LEVEL
2. S.F.L. -- STRUCTURAL FLOOR LEVEL
3. /R -- REVERSED DETAIL

NO.	DATE	REVISED	BY
A	25/05/22	REVISED AS PER COMMENTS	LS

JOB NO. : J-858

PROJECT :
PROPOSED RESIDENTIAL DEVELOPMENT
AT TKOTL 70RP, PHASE 11, LOHAS PARK
TSEUNG KWAN O, N.T.

TITLE :
TYPICAL MULLION DETAIL
FOR CURTAIN WALL

DATE : 22-OCT-21 | SCALE : 1:1.5(A1)

DRAWN BY : | CHECKED BY :

美特鋁質有限公司
MIDI ALUMINIUM FABRICATOR LTD.
Units 6-8, Sunray Industrial Centre, 1/F
610 Cha Kwo Ling Road, Kowloon
Tel:23489211-4 Fax:(852)27727666

DWG NO. : J858-CW-D36 | REV. : A

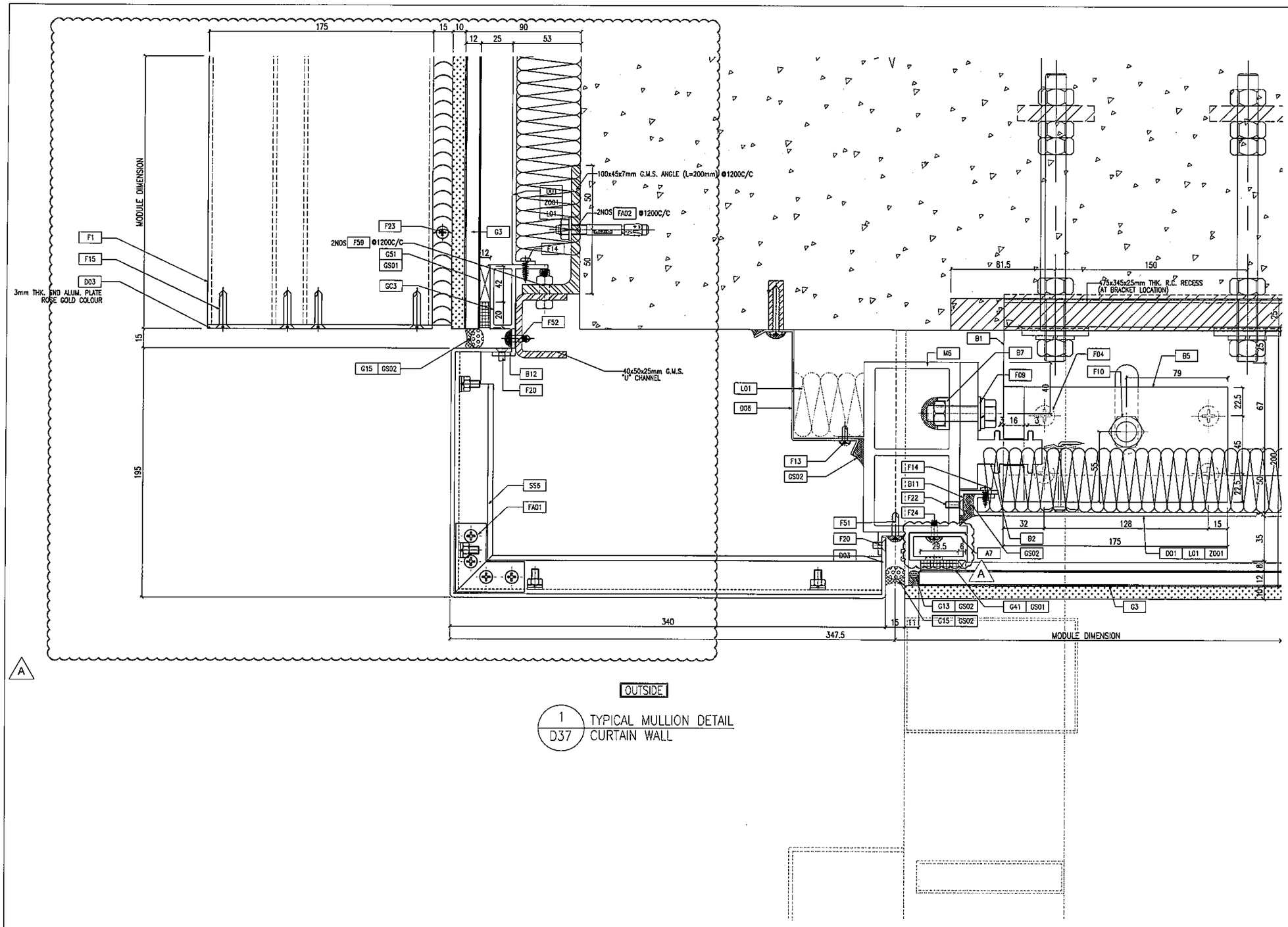

1/D37 TYPICAL MULLION DETAIL CURTAIN WALL

B.D. REF :

CLIENT :
信和置業有限公司
Sino Land Company Limited

ARCHITECT :
ronald lu & partners
Architects . Planners . Interior Designers
Ronald Lu & Partners (HK) Ltd.
呂元祥建築師事務所(香港)有限公司

MAIN CONTRACTOR :
Gammon

STRUCTURAL ENGINEER :
AECOM

FACADE CONSULTANT:
AECOM

NOTE :
1. ALL DIMENSIONS ARE IN mm.
2. ALL ELEVATIONS ARE VIEWED FROM OUTSIDE.
3. ALL DIMENSIONS TO BE VERIFIED ON SITE BEFORE FABRICATION.

LEGEND :
X1 / XG01 — DETAIL MARK NO. / REFER SHEET NO.
1. F.F.L. --FINISHED FLOOR LEVEL
2. S.F.L. --STRUCTURAL FLOOR LEVEL
3. /R --REVERSED DETAIL

NO.	DATE	REVISED	BY
A	25/05/22	REVISED AS PER COMMENTS	LS

JOB NO. : J-858

PROJECT :
PROPOSED RESIDENTIAL DEVELOPMENT
AT TKOTL 70RP, PHASE 11, LOHAS PARK
TSEUNG KWAN O, N.T.

TITLE :
TYPICAL MULLION DETAIL
FOR CURTAIN WALL

DATE : 22-OCT-21 | SCALE : 1:1.5(A1)

DRAWN BY : | CHECKED BY :

美特鋁質有限公司
MIDI ALUMINIUM FABRICATOR LTD.
Units 6-8, Sunray Industrial Centre, 1/F
610 Cha Kwo Ling Road, Kowloon
Tel:23489211-4 Fax:(852)27727666

DWG NO. : J858-CW-D37 | REV. : A

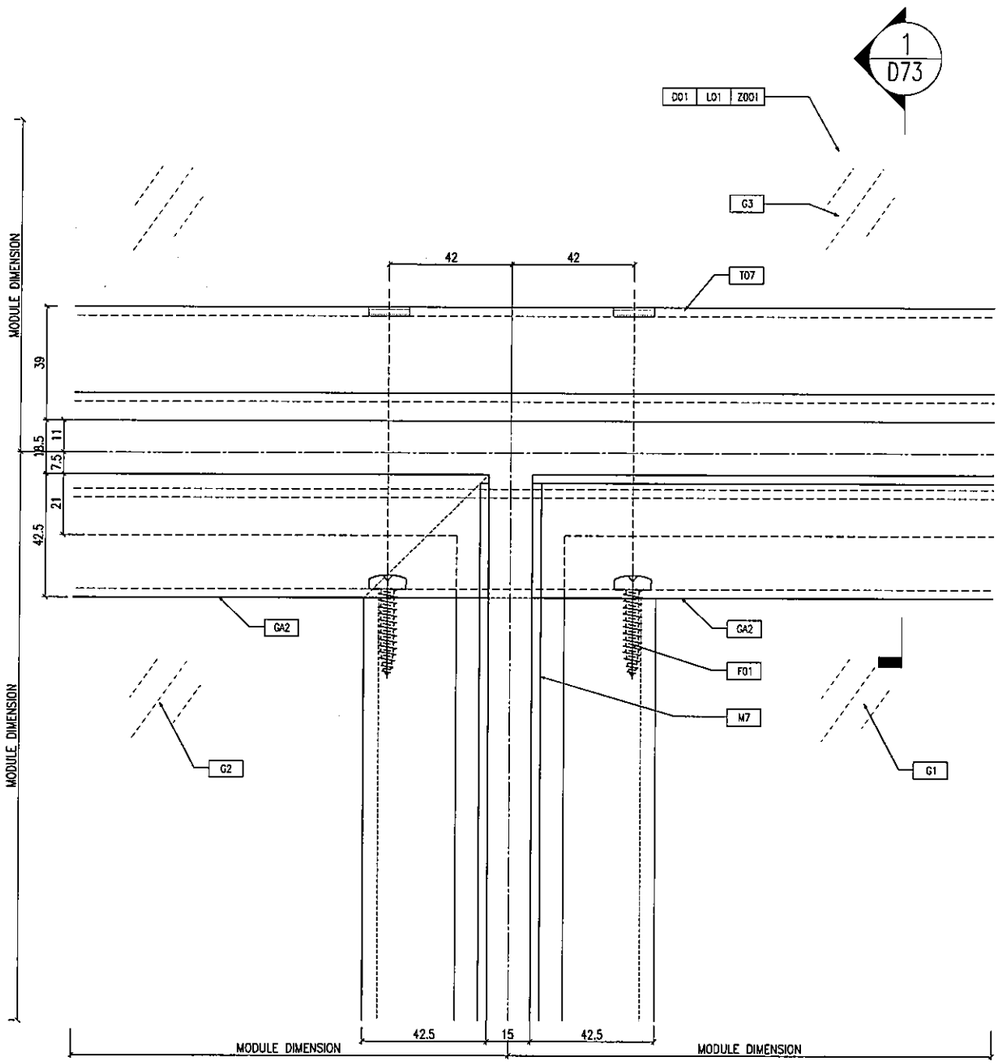

1 / D38 TYPICAL DETAIL CURTAIN WALL

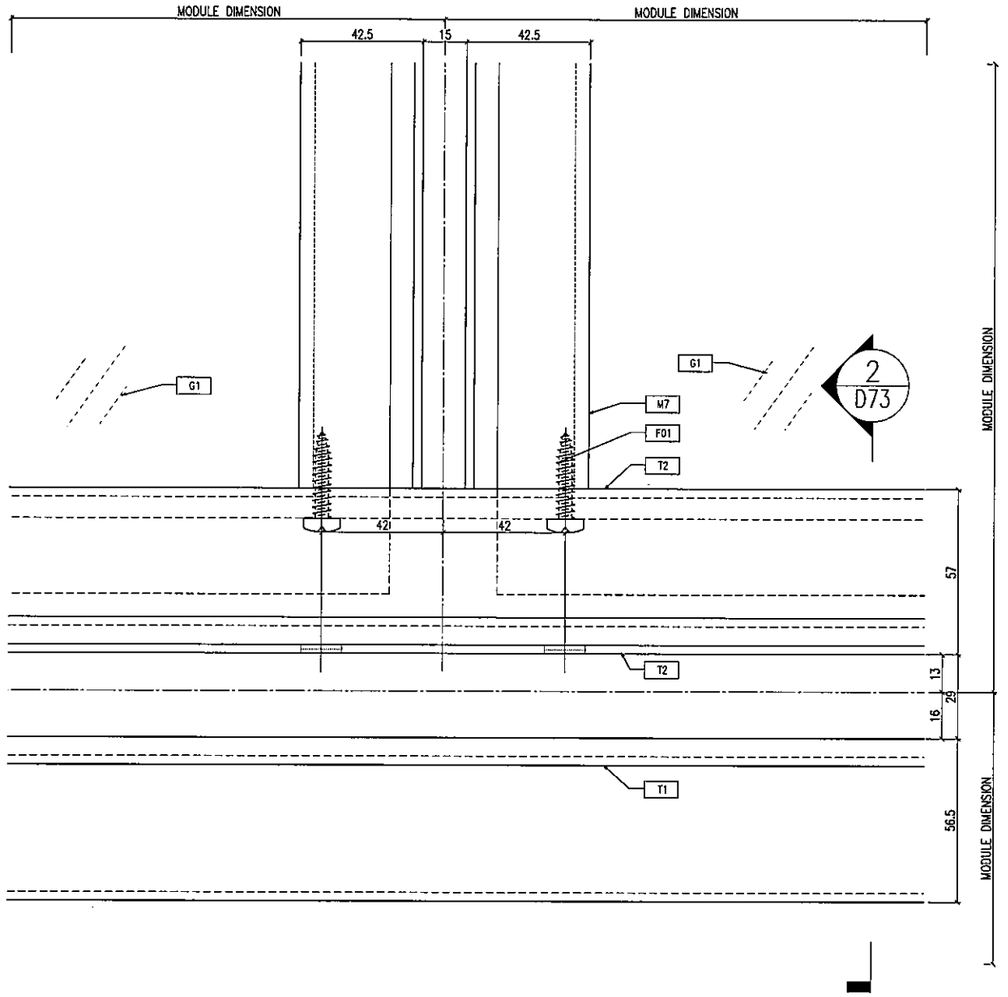

2 / D38 TYPICAL DETAIL CURTAIN WALL

B.D. REF :

CLIENT :
信和置業有限公司
Sino Land Company Limited

ARCHITECT :
ronald lu & partners
Architects, Planners, Interior Designers
Ronald Lu & Partners (HK) Ltd.
呂元祥建築師事務所(香港)有限公司

MAIN CONTRACTOR :
Gammon

STRUCTURAL ENGINEER :
AECOM

FACADE CONSULTANT:
AECOM

NOTE :
1. ALL DIMENSIONS ARE IN mm.
2. ALL ELEVATIONS ARE VIEWED FROM OUTSIDE.
3. ALL DIMENSIONS TO BE VERIFIED ON SITE BEFORE FABRICATION.

LEGEND :
X1 — DETAIL MARK NO.
XOO1 — REFER SHEET NO.
1. F.F.L. -- FINISHED FLOOR LEVEL
2. S.F.L. -- STRUCTURAL FLOOR LEVEL
3. /R -- REVERSED DETAIL

NO.	DATE	REVISED	BY

JOB NO. : J-858

PROJECT :
PROPOSED RESIDENTIAL DEVELOPMENT
AT TKOTL 70RP, PHASE 11, LOHAS PARK
TSEUNG KWAN O, N.T.

TITLE :
TYPICAL MULLION DETAIL
FOR CURTAIN WALL

DATE : 22-OCT-21 | SCALE : 1:1(A1)

DRAWN BY : | CHECKED BY :

美特鋁質有限公司
MIDI ALUMINIUM FABRICATOR LTD.
Units 6-8, Sunray Industrial Centre, 1/F
610 Cha Kwo Ling Road, Kowloon
Tel:23489211-4 Fax:(852)27727666

DWG NO. : J858-CW-D38 | REV. : -

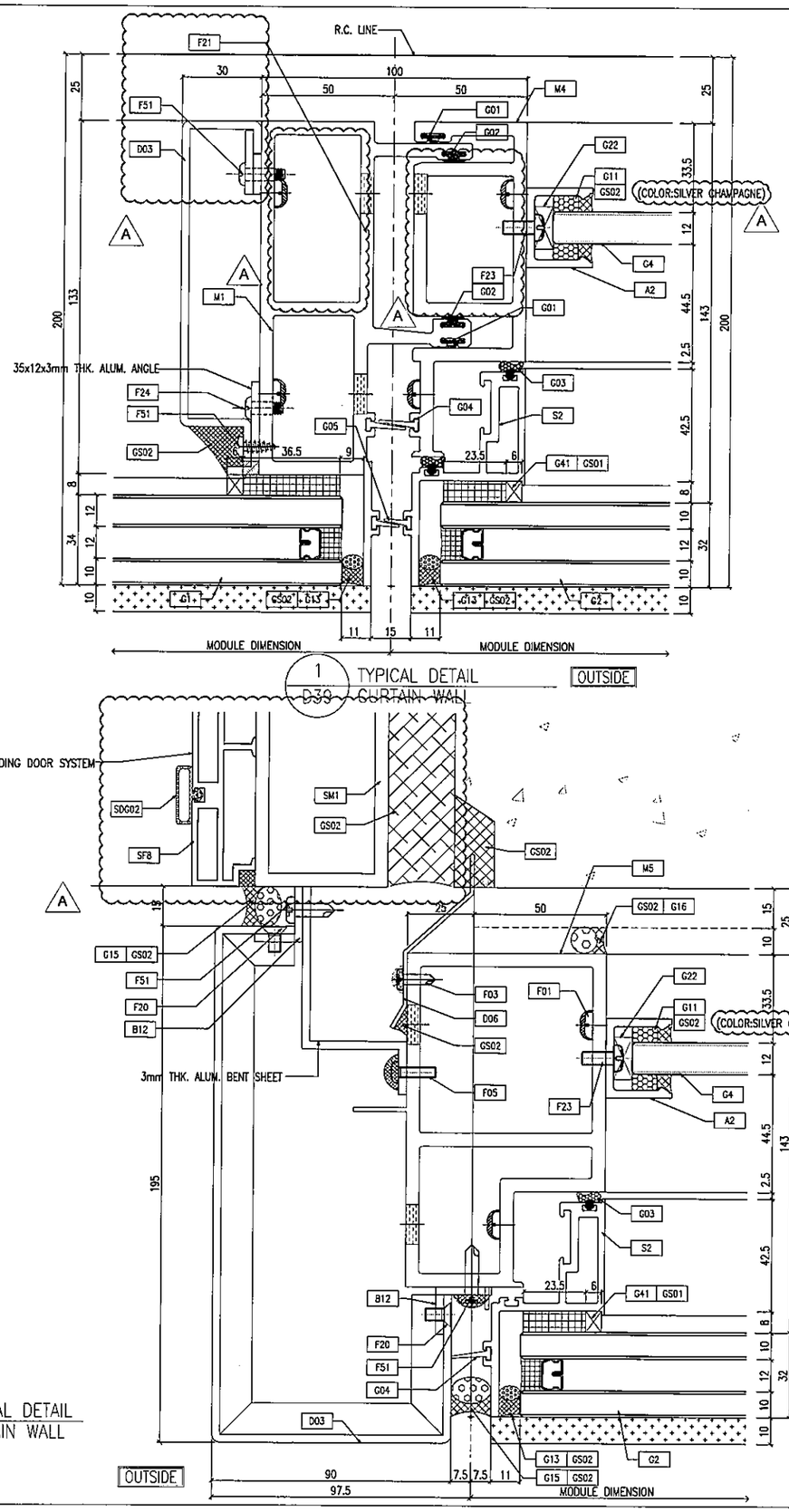

B.D. REF :

CLIENT :
信和置業有限公司
Sino Land Company Limited

ARCHITECT :
ronald lu & partners
Architects . Planners . Interior Designers
Ronald Lu & Partners (HK) Ltd.
呂元祥建築師事務所(香港)有限公司

MAIN CONTRACTOR :
Gammon

STRUCTURAL ENGINEER :
AECOM

FACADE CONSULTANT:
AECOM

NOTE :
1. ALL DIMENSIONS ARE IN mm.
2. ALL ELEVATIONS ARE VIEWED FROM OUTSIDE.
3. ALL DIMENSIONS TO BE VERIFIED ON SITE BEFORE FABRICATION.

LEGEND :
- X1 / XOO1 — DETAIL MARK NO. / REFER SHEET NO.
1. F.F.L. --FINISHED FLOOR LEVEL
2. S.F.L. --STRUCTURAL FLOOR LEVEL
3. (/R) --REVERSED DETAIL

NO.	DATE	REVISED	BY
A	25/05/22	REVISED AS PER COMMENTS	LS

JOB NO. : J-858

PROJECT :
PROPOSED RESIDENTIAL DEVELOPMENT
AT TKOTL 70RP, PHASE 11, LOHAS PARK
TSEUNG KWAN O, N.T.

TITLE :
TYPICAL MULLION DETAIL
FOR CURTAIN WALL

DATE : 22-OCT-21 | SCALE : 1:1(A1)

DRAWN BY : | CHECKED BY :

美特鋁質有限公司
MIDI ALUMINIUM FABRICATOR LTD.
Units 6-8, Sunray Industrial Centre, 1/F
610 Cha Kwo Ling Road, Kowloon
Tel:23489211-4 Fax:(852)27727666

DWG NO. : J858-CW-D39 | REV. : A

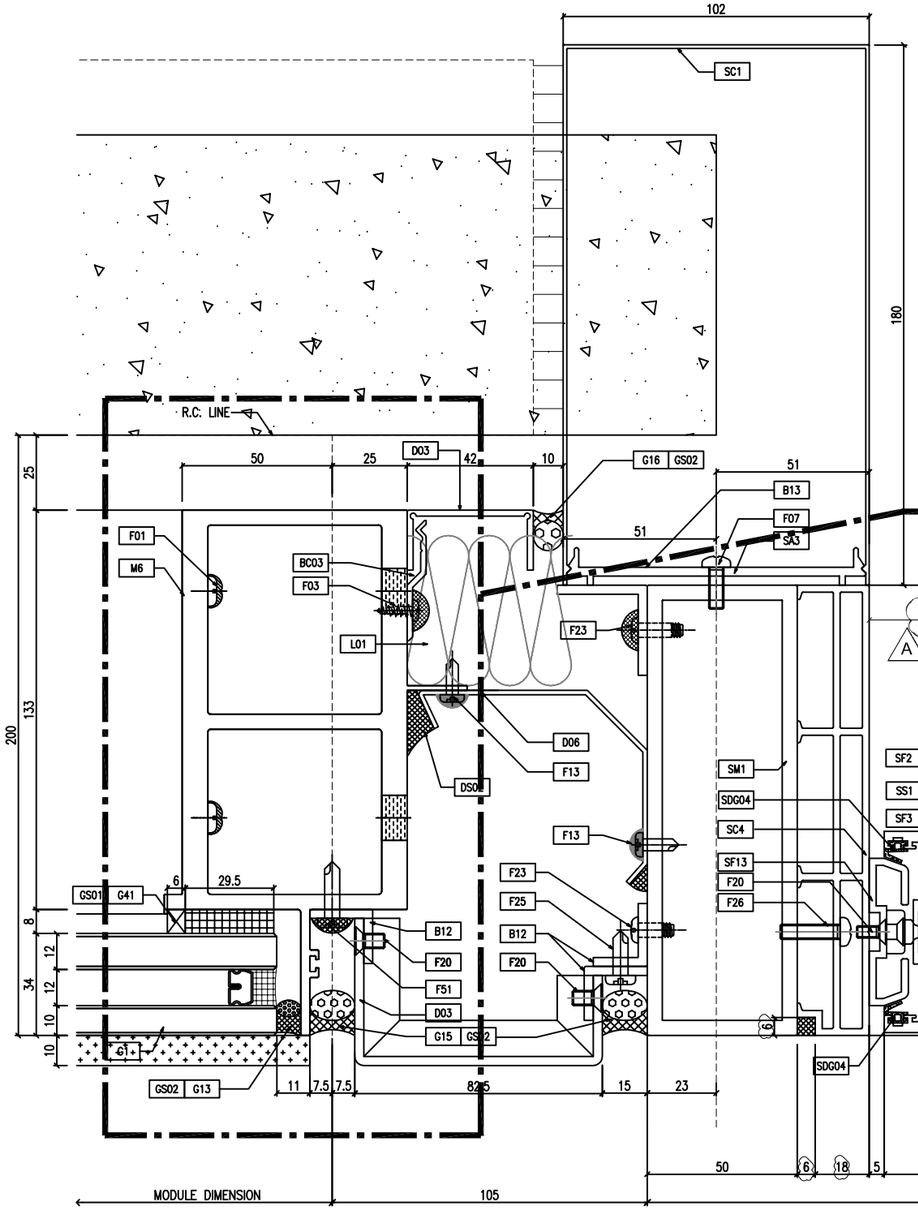

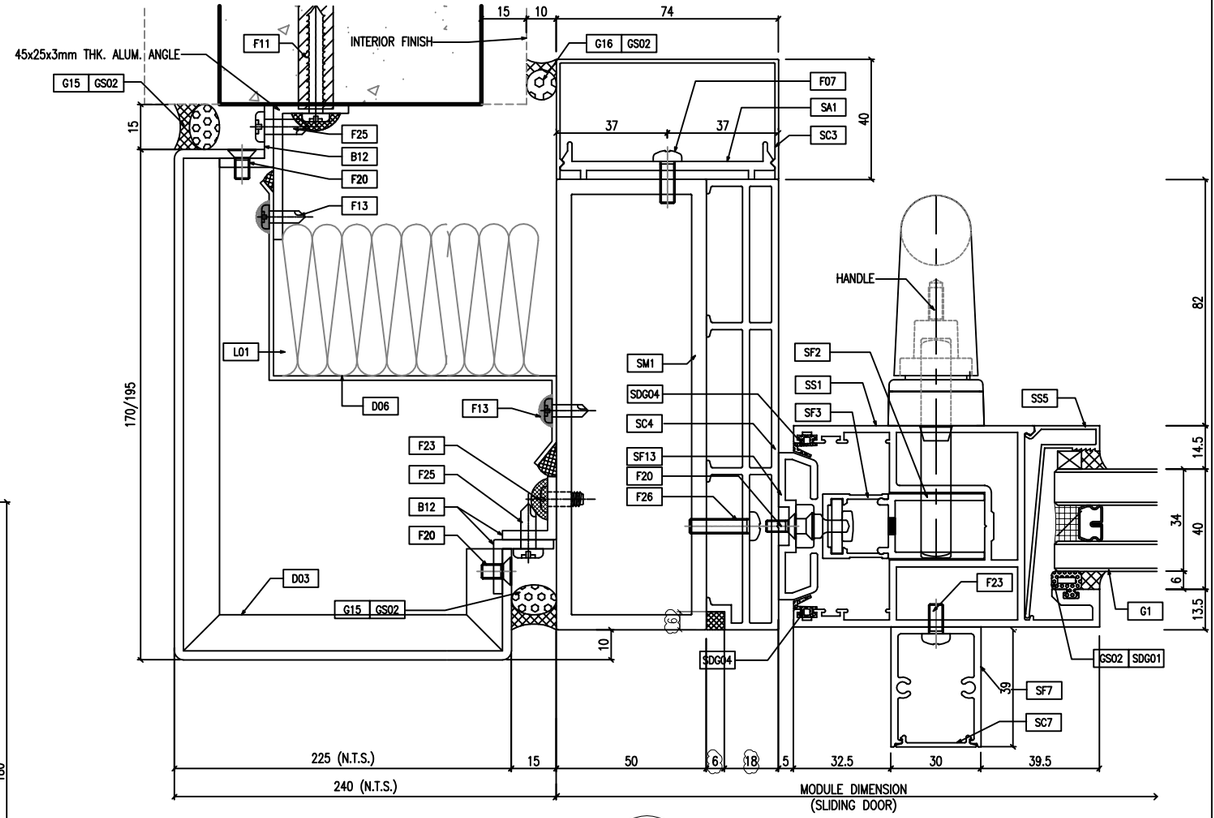

2 / D40 TYPICAL DETAIL **OUTSIDE** CURTAIN WALL

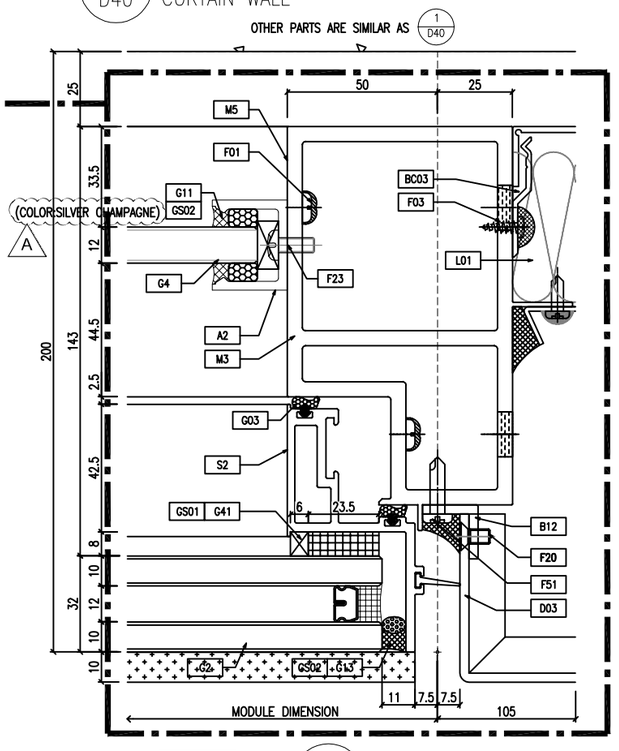

1 / D40 TYPICAL DETAIL **OUTSIDE** CURTAIN WALL

1A / D40 TYPICAL DETAIL CURTAIN WALL

B.D. REF :

CLIENT :
信和置業有限公司
Sino Land Company Limited

ARCHITECT :
ronald lu & partners
Architects . Planners . Interior Designers
Ronald Lu & Partners (HK) Ltd.
呂元祥建築師事務所(香港)有限公司

MAIN CONTRACTOR :
Gammon

STRUCTURAL ENGINEER :
AECOM

FACADE CONSULTANT:
AECOM

NOTE :
1. ALL DIMENSIONS ARE IN mm.
2. ALL ELEVATIONS ARE VIEWED FROM OUTSIDE.
3. ALL DIMENSIONS TO BE VERIFIED ON SITE BEFORE FABRICATION.

LEGEND :
X1 / X001 — DETAIL MARK NO. / REFER SHEET NO.
1. F.F.L. --FINISHED FLOOR LEVEL
2. S.F.L. --STRUCTURAL FLOOR LEVEL
3. /R --REVERSED DETAIL

NO.	DATE	REVISED	BY
A	25/05/22	REVISED AS PER COMMENTS	LS

JOB NO. : J-858

PROJECT :
PROPOSED RESIDENTIAL DEVELOPMENT
AT TKOTL 70RP, PHASE 11, LOHAS PARK
TSEUNG KWAN O, N.T.

TITLE :
TYPICAL MULLION DETAIL
FOR CURTAIN WALL

DATE : 22-OCT-21 | SCALE : 1:1(A1)

DRAWN BY : | CHECKED BY :

美特鋁質有限公司
MIDI ALUMINIUM FABRICATOR LTD.
Units 6-8, Sunray Industrial Centre, 1/F
610 Cha Kwo Ling Road, Kowloon
Tel:23489211-4 Fax:(852)27727666

DWG NO. : J858-CW-D40 | REV. : A

T:\Jobs\J-858\3 Dwg & Cal\Shop Drawings\Curtain Wall\6th\20220531\5月31\J858 CURTAIN WALL SHOP DRAWING(CAD)-20220531-TYPICAL & PENTHOUSE\J858 CW DETAIL.dwg

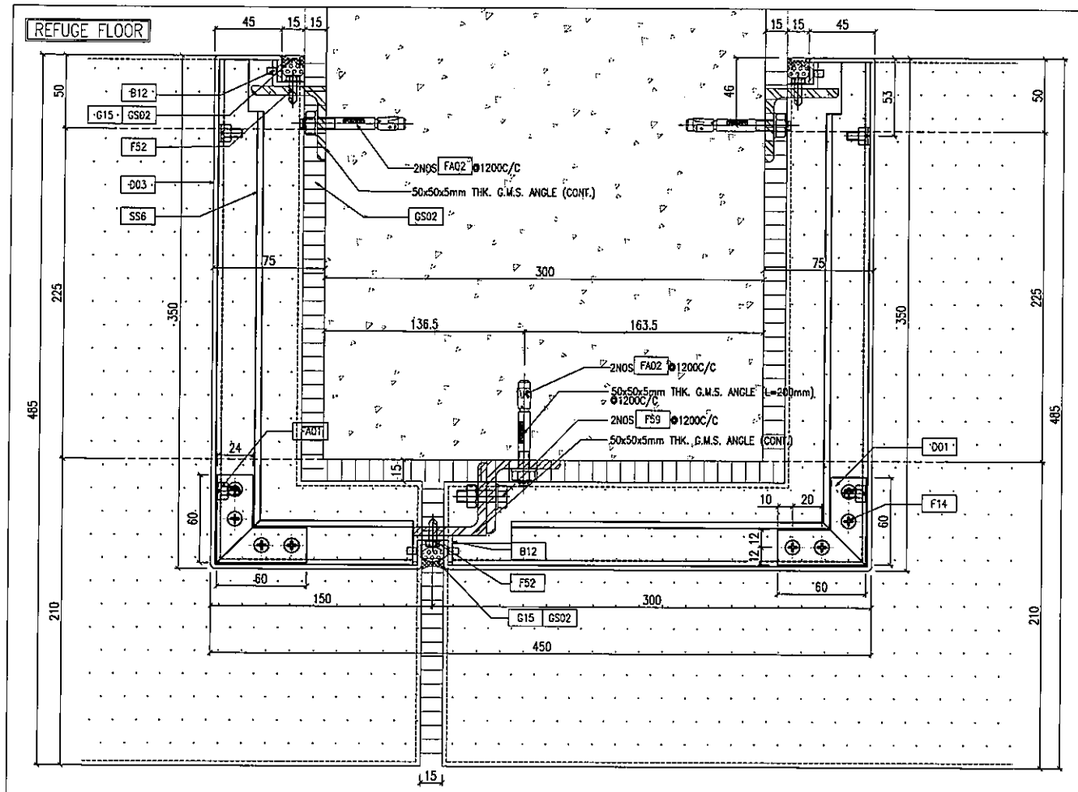

1 D41 TYPICAL MULLION DETAIL CURTAIN WALL

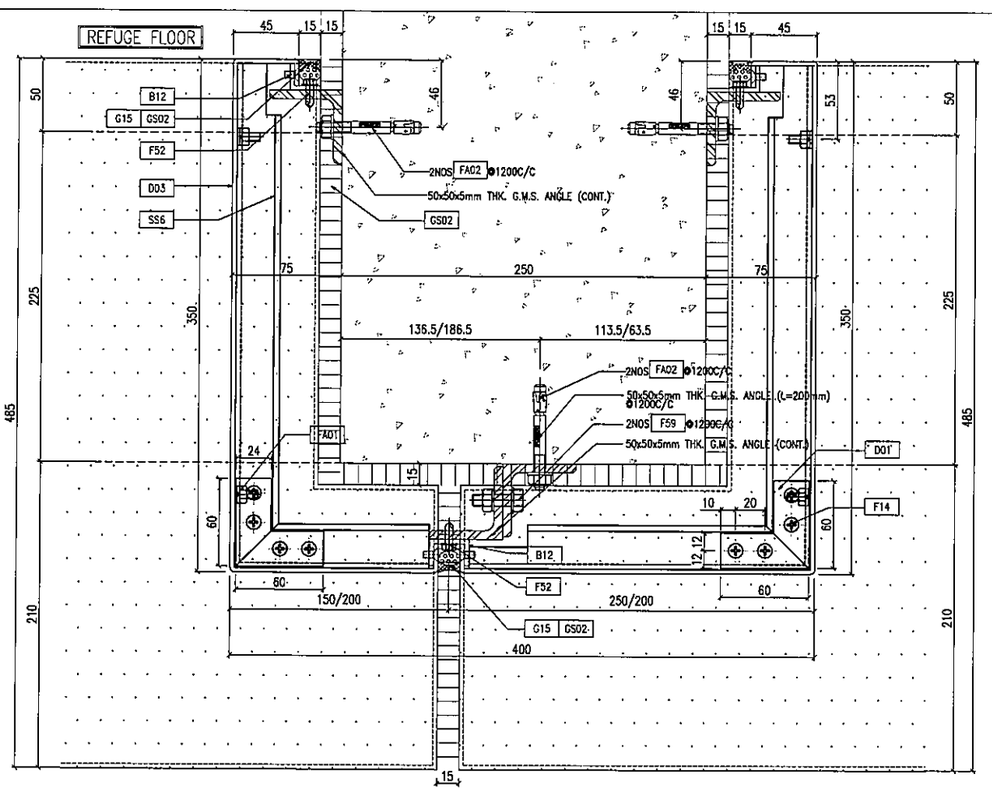

2 D41 TYPICAL MULLION DETAIL CURTAIN WALL

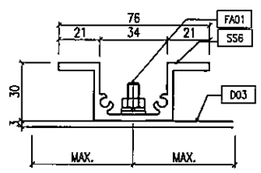

OUTSIDE

A D41 TYPICAL MULLION DETAIL CURTAIN WALL

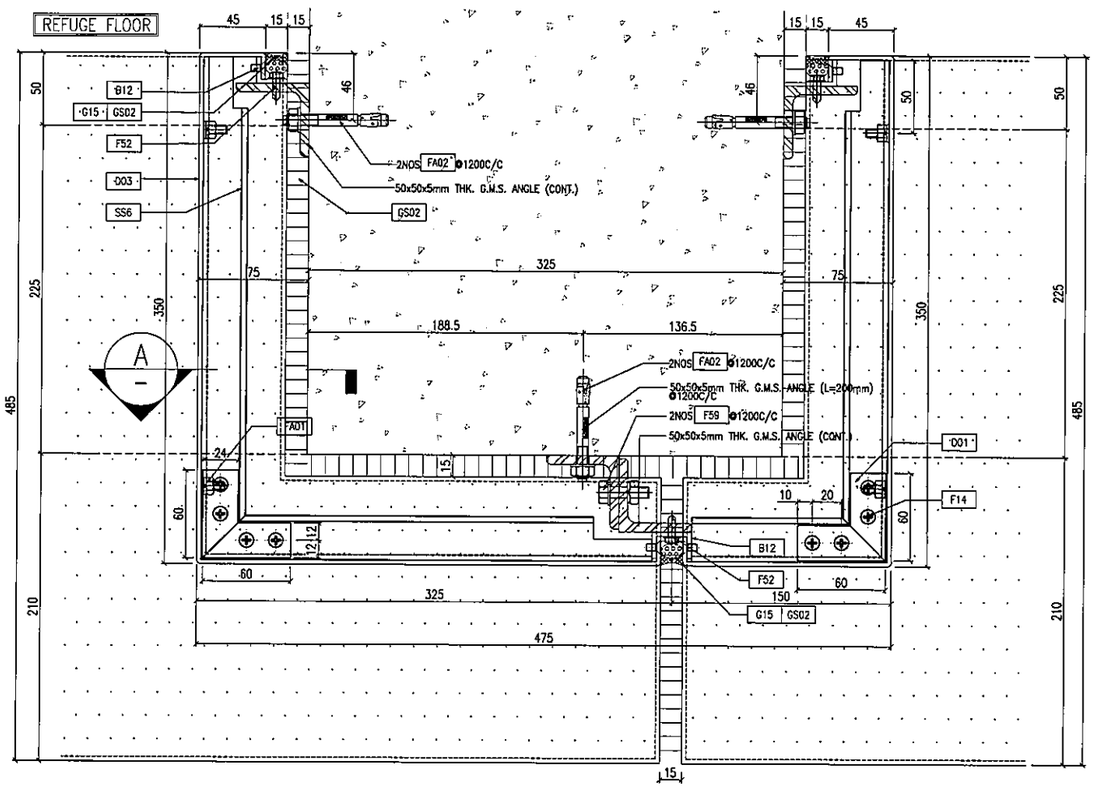

3 D41 TYPICAL MULLION DETAIL CURTAIN WALL

B.D. REF :

CLIENT :
信和置業有限公司
Sino Land Company Limited

ARCHITECT :
ronald lu & partners
Architects, Planners, Interior Designers
Ronald Lu & Partners (HK) Ltd.
呂元祥建築師事務所(香港)有限公司

MAIN CONTRACTOR :
Gammon

STRUCTURAL ENGINEER :
AECOM

FACADE CONSULTANT:
AECOM

NOTE :
1. ALL DIMENSIONS ARE IN mm.
2. ALL ELEVATIONS ARE VIEWED FROM OUTSIDE.
3. ALL DIMENSIONS TO BE VERIFIED ON SITE BEFORE FABRICATION.

LEGEND :
X1 / X001 — DETAIL MARK NO. / REFER SHEET NO.
1. F.F.L. --FINISHED FLOOR LEVEL
2. S.F.L. --STRUCTURAL FLOOR LEVEL
3. (/R) --REVERSED DETAIL

NO.	DATE	REVISED	BY

JOB NO. : J-858

PROJECT :
PROPOSED RESIDENTIAL DEVELOPMENT
AT TKOTL 70RP, PHASE 11, LOHAS PARK
TSEUNG KWAN O, N.T.

TITLE :
TYPICAL MULLION DETAIL
FOR CURTAIN WALL

DATE : 22-OCT-21	SCALE : 1:2(A1)
DRAWN BY :	CHECKED BY :

美特鋁質有限公司
MIDI ALUMINUM FABRICATOR LTD.
Units 6-8, Sunray Industrial Centre, 1/F
610 Cha Kwo Ling Road, Kowloon
Tel:23489211-4 Fax:(852)27727666

DWG NO. : J858-CW-D41 REV. : -

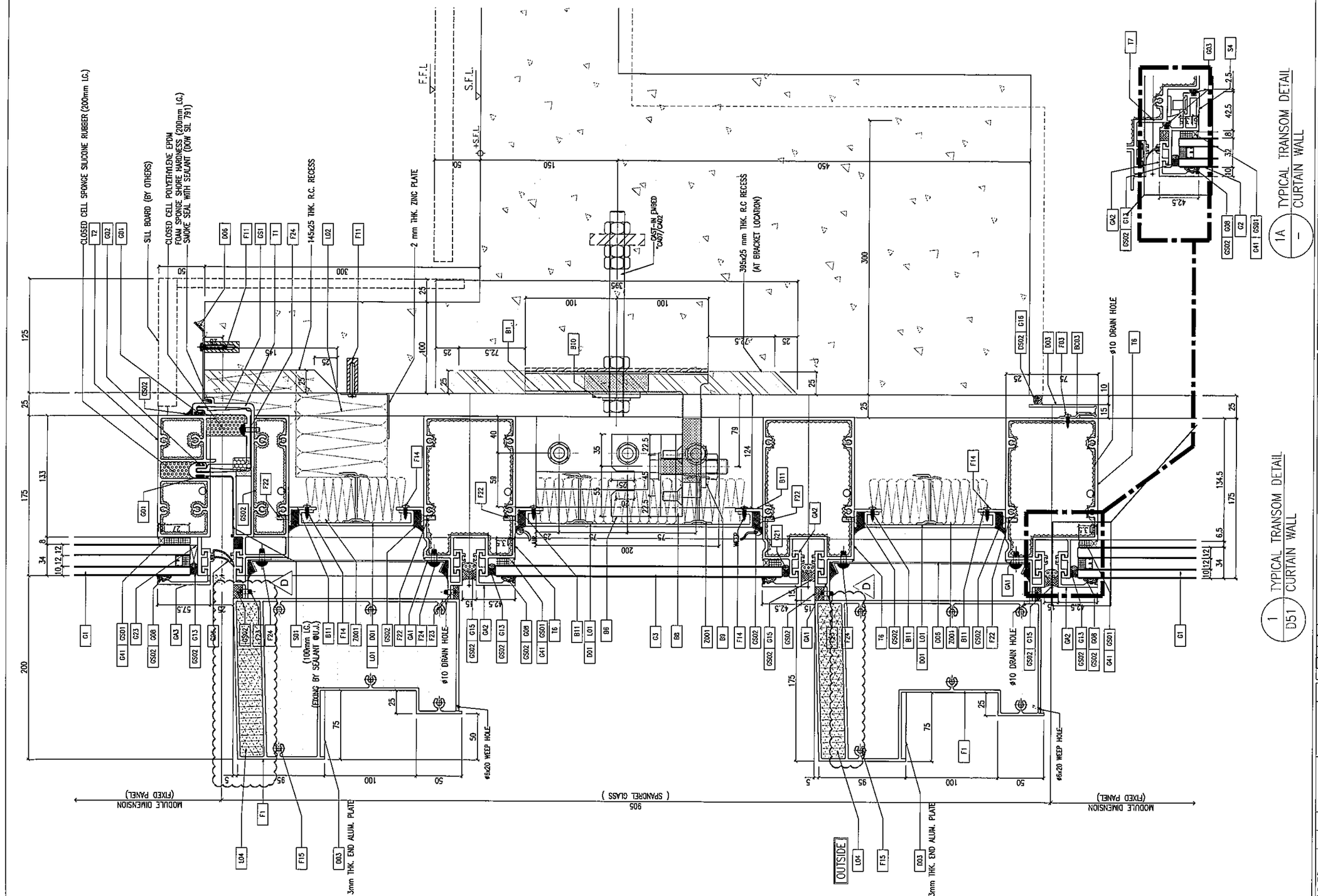

1A TYPICAL TRANSOM DETAIL / CURTAIN WALL

1 TYPICAL TRANSOM DETAIL / CURTAIN WALL D51

B.D. REF :

CLIENT :
信和置業有限公司
Sino Land Company Limited

ARCHITECT :
ronald lu & partners
Architects . Planners . Interior Designers
Ronald Lu & Partners (HK) Ltd.
呂元祥建築師事務所(香港)有限公司

MAIN CONTRACTOR :
Gammon

STRUCTURAL ENGINEER :
AECOM

FACADE CONSULTANT:
AECOM

NOTE :
1. ALL DIMENSIONS ARE IN mm.
2. ALL ELEVATIONS ARE VIEWED FROM OUTSIDE.
3. ALL DIMENSIONS TO BE VERIFIED ON SITE BEFORE FABRICATION.

LEGEND :
X1 — DETAIL MARK NO.
X001 — REFER SHEET NO.

1. F.F.L. --FINISHED FLOOR LEVEL
2. S.F.L. --STRUCTURAL FLOOR LEVEL
3. /R --REVERSED DETAIL

NO.	DATE	REVISED	BY
D	25/05/22	REVISED AS PER COMMENTS	LS
C	07/04/22	REVISED AS PER COMMENTS	LS
B	25/01/22	REVISED AS PER COMMENTS	LS
A	23/12/21	REVISED AS PER COMMENTS	LS

JOB NO. : J-858

PROJECT :
PROPOSED RESIDENTIAL DEVELOPMENT AT TKOTL 70RP, PHASE 11, LOHAS PARK TSEUNG KWAN O, N.T.

TITLE :
TYPICAL MULLION DETAIL FOR CURTAIN WALL

DATE : 22-OCT-21 | SCALE : 1:2(A1)

DRAWN BY : | CHECKED BY :

美特鋁質有限公司
MIDI ALUMINIUM FABRICATOR LTD.
Units 6-8, Sunray Industrial Centre, 1/F
610 Cha Kwo Ling Road, Kowloon
Tel:23489211-4 Fax:(852)27727666

DWG NO. : J858-CW-D51 | REV. : D

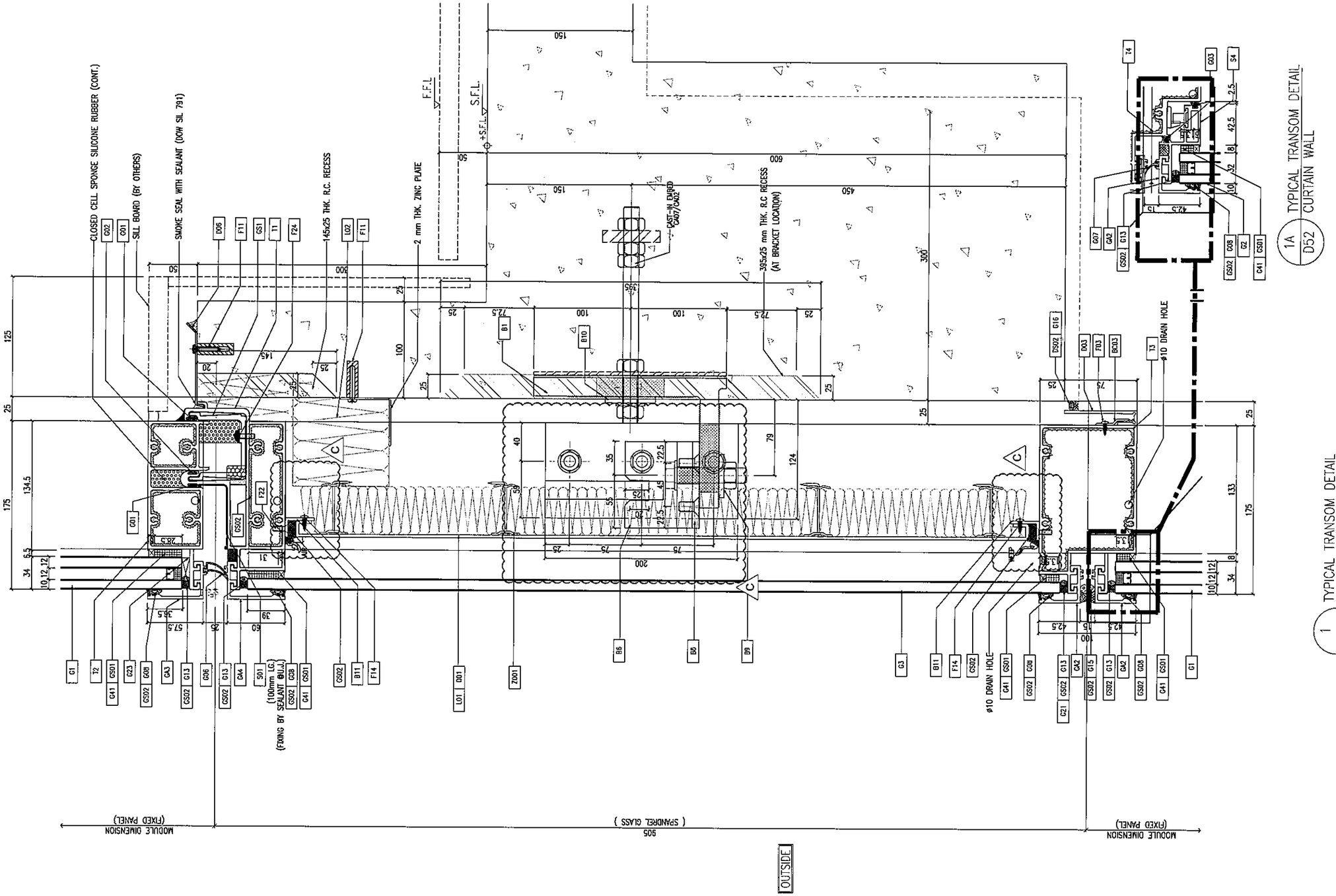

1A TYPICAL TRANSOM DETAIL D52

1 TYPICAL TRANSOM DETAIL CURTAIN WALL D52

B.D. REF :

CLIENT :
信和置業有限公司
Sino Land Company Limited

ARCHITECT :
ronald lu & partners
Architects . Planners . Interior Designers
Ronald Lu & Partners (HK) Ltd.
呂元祥建築師事務所(香港)有限公司

MAIN CONTRACTOR :
Gammon

STRUCTURAL ENGINEER :
AECOM

FACADE CONSULTANT:
AECOM

NOTE :
1. ALL DIMENSIONS ARE IN mm.
2. ALL ELEVATIONS ARE VIEWED FROM OUTSIDE.
3. ALL DIMENSIONS TO BE VERIFIED ON SITE BEFORE FABRICATION.

LEGEND :
X1 — DETAIL MARK NO.
X001 — REFER SHEET NO.

1. F.F.L. --FINISHED FLOOR LEVEL
2. S.F.L. --STRUCTURAL FLOOR LEVEL
3. /R --REVERSED DETAIL

NO.	DATE	REVISED	BY
C	07/04/22	REVISED AS PER COMMENTS	LS
B	25/01/22	REVISED AS PER COMMENTS	LS
A	23/12/21	REVISED AS PER COMMENTS	LS

JOB NO. : J-858

PROJECT :
PROPOSED RESIDENTIAL DEVELOPMENT
AT TKOTL 70RP, PHASE 11, LOHAS PARK
TSEUNG KWAN O, N.T.

TITLE :
TYPICAL MULLION DETAIL
FOR CURTAIN WALL

DATE : 22-OCT-21 | SCALE : 1:2(A1)

DRAWN BY : | CHECKED BY :

美特鋁質有限公司
MIDI ALUMINIUM FABRICATOR LTD.
Units 6-8, Sunray Industrial Centre, 1/F
610 Cha Kwo Ling Road, Kowloon
Tel:23469211-4 Fax:(852)27727666

DWG NO. : J858-CW-D52 | REV. : C

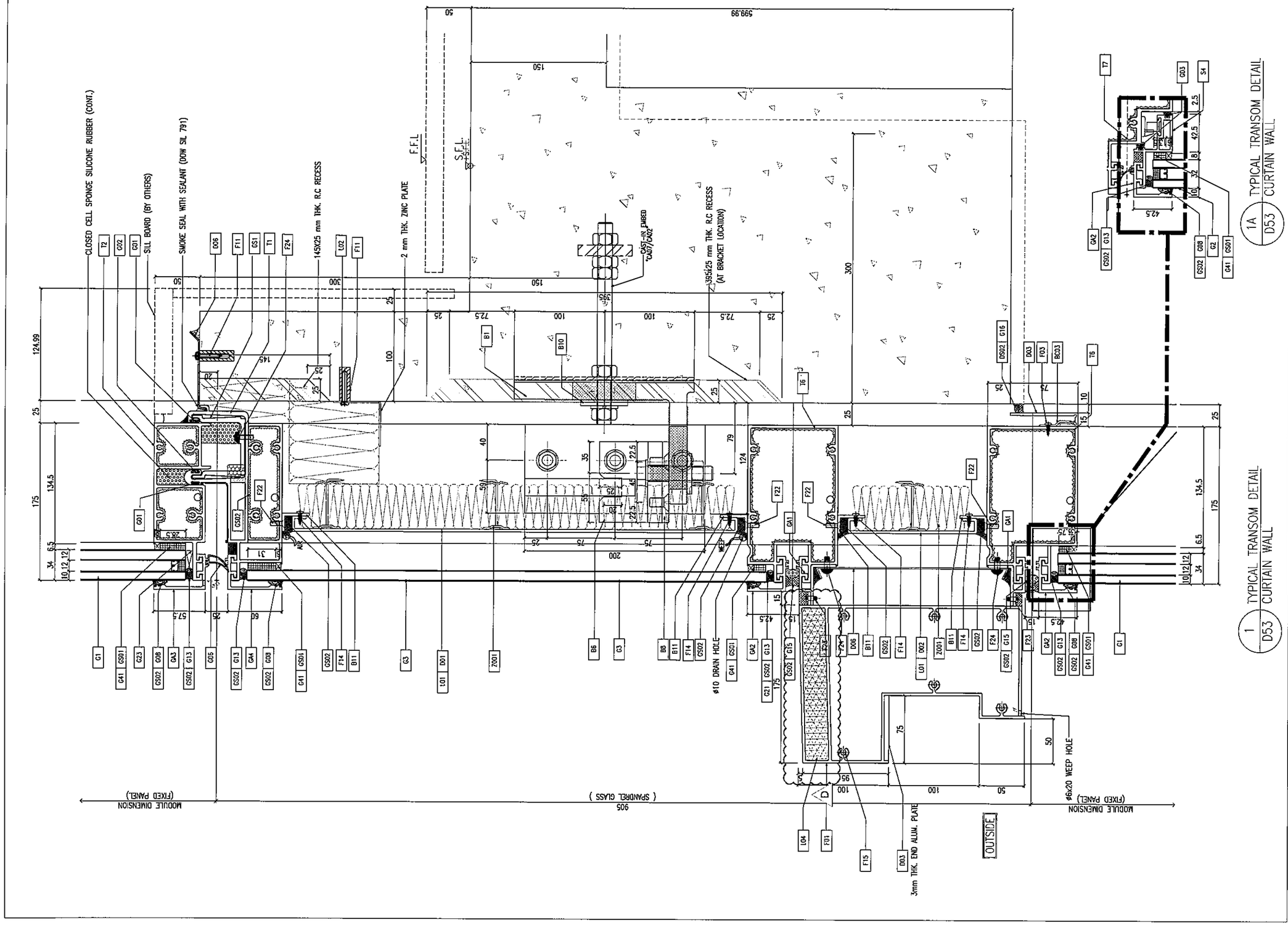

B.D. REF :

CLIENT :
信和置業有限公司
Sino Land Company Limited

ARCHITECT :
ronald lu & partners
Architects . Planners . Interior Designers
Ronald Lu & Partners (HK) Ltd.
呂元祥建築師事務所(香港)有限公司

MAIN CONTRACTOR :
Gammon

STRUCTURAL ENGINEER :
AECOM

FACADE CONSULTANT:
AECOM

NOTE :
1. ALL DIMENSIONS ARE IN mm.
2. ALL ELEVATIONS ARE VIEWED FROM OUTSIDE.
3. ALL DIMENSIONS TO BE VERIFIED ON SITE BEFORE FABRICATION.

LEGEND :
X1 — DETAIL MARK NO.
X001 — REFER SHEET NO.

1. F.F.L. --FINISHED FLOOR LEVEL
2. S.F.L. --STRUCTURAL FLOOR LEVEL
3. (R) --REVERSED DETAIL

NO.	DATE	REVISED	BY
D	25/05/22	REVISED AS PER COMMENTS	LS
C	07/04/22	REVISED AS PER COMMENTS	LS
B	25/01/22	REVISED AS PER COMMENTS	LS
A	23/12/21	REVISED AS PER COMMENTS	LS

JOB NO. : J-858

PROJECT :
PROPOSED RESIDENTIAL DEVELOPMENT
AT TKOTL 70RP, PHASE 11, LOHAS PARK
TSEUNG KWAN O, N.T.

TITLE :
TYPICAL MULLION DETAIL
FOR CURTAIN WALL

DATE : 22-OCT-21 | SCALE : 1:2(A1)

DRAWN BY : | CHECKED BY :

美特鋁質有限公司
MIDI ALUMINUM FABRICATOR LTD.
Units 6-8, Sunray Industrial Centre, 1/F
610 Cha Kwo Ling Road, Kowloon
Tel:23489211-4 Fax:(852)27727666

DWG NO. : J858-CW-D53 | REV. : D

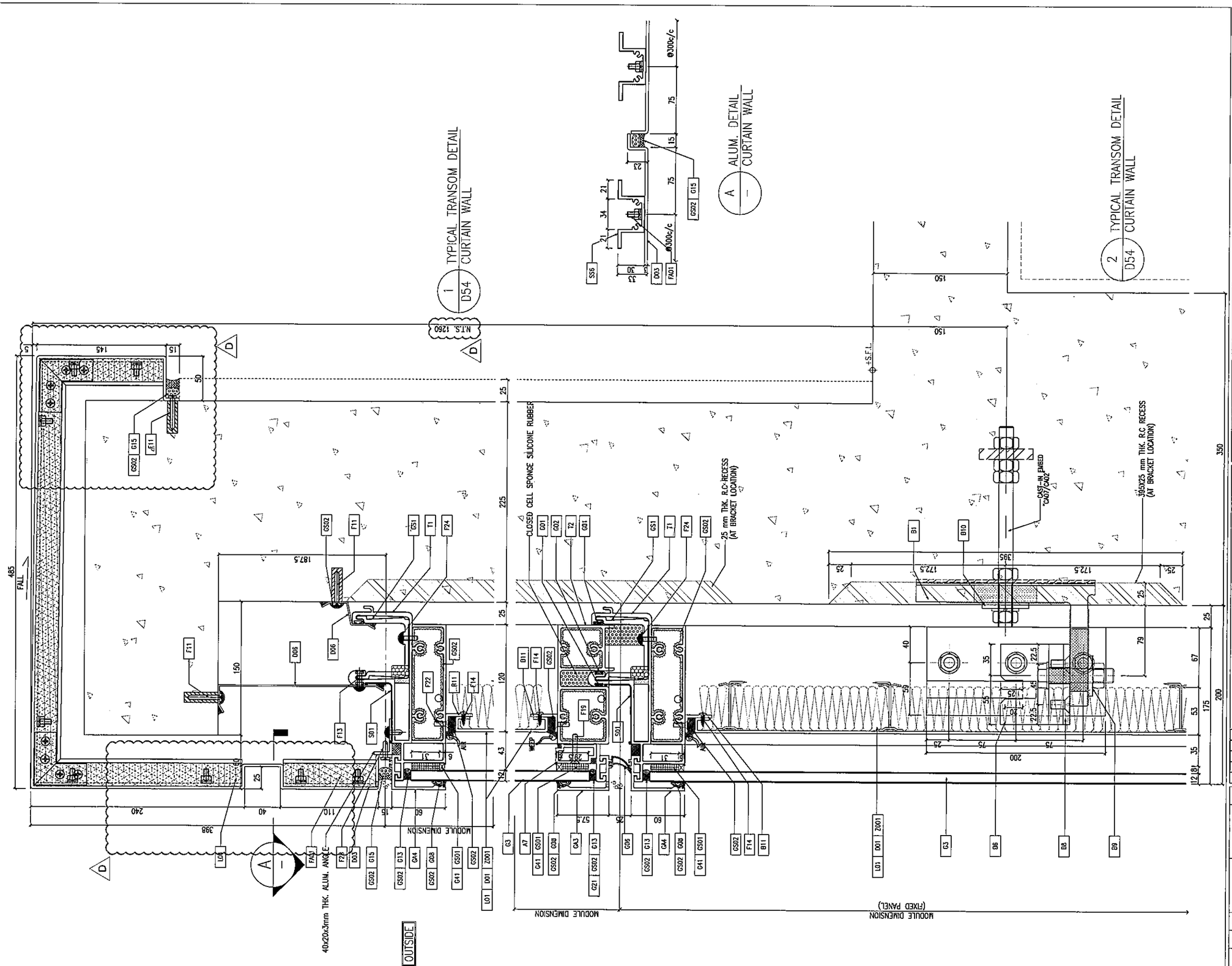

B.D. REF :

CLIENT :
信和置業有限公司
Sino Land Company Limited

ARCHITECT :
ronald lu & partners
Architects . Planners . Interior Designers
Ronald Lu & Partners (HK) Ltd.
呂元祥建築師事務所(香港)有限公司

MAIN CONTRACTOR :
Gammon

STRUCTURAL ENGINEER :
AECOM

FACADE CONSULTANT:
AECOM

NOTE :
1. ALL DIMENSIONS ARE IN mm.
2. ALL ELEVATIONS ARE VIEWED FROM OUTSIDE.
3. ALL DIMENSIONS TO BE VERIFIED ON SITE BEFORE FABRICATION.

LEGEND :
(X1 / X001) — DETAIL MARK NO. / REFER SHEET NO.
1. F.F.L. — FINISHED FLOOR LEVEL
2. S.F.L. — STRUCTURAL FLOOR LEVEL
3. (/R) — REVERSED DETAIL

NO.	DATE	REVISED	BY
D	25/05/22	REVISED AS PER COMMENTS	LS
C	25/01/22	REVISED AS PER COMMENTS	LS
B	25/01/22	REVISED AS PER COMMENTS	LS
A	23/12/21	REVISED AS PER COMMENTS	LS

JOB NO. : J-858

PROJECT :
PROPOSED RESIDENTIAL DEVELOPMENT
AT TKOTL 70RP, PHASE 11, LOHAS PARK
TSEUNG KWAN O, N.T.

TITLE :
TYPICAL MULLION DETAIL
FOR CURTAIN WALL

DATE : 22-OCT-21 | SCALE : 1:2(A1)

DRAWN BY : | CHECKED BY :

美特鋁質有限公司
MIDI ALUMINIUM FABRICATOR LTD.
Units 6-8, Sunray Industrial Centre, 1/F
610 Cha Kwo Ling Road, Kowloon
Tel:23489211-4 Fax:(852)27727665

DWG NO. : J858-CW-D54 | REV. : D

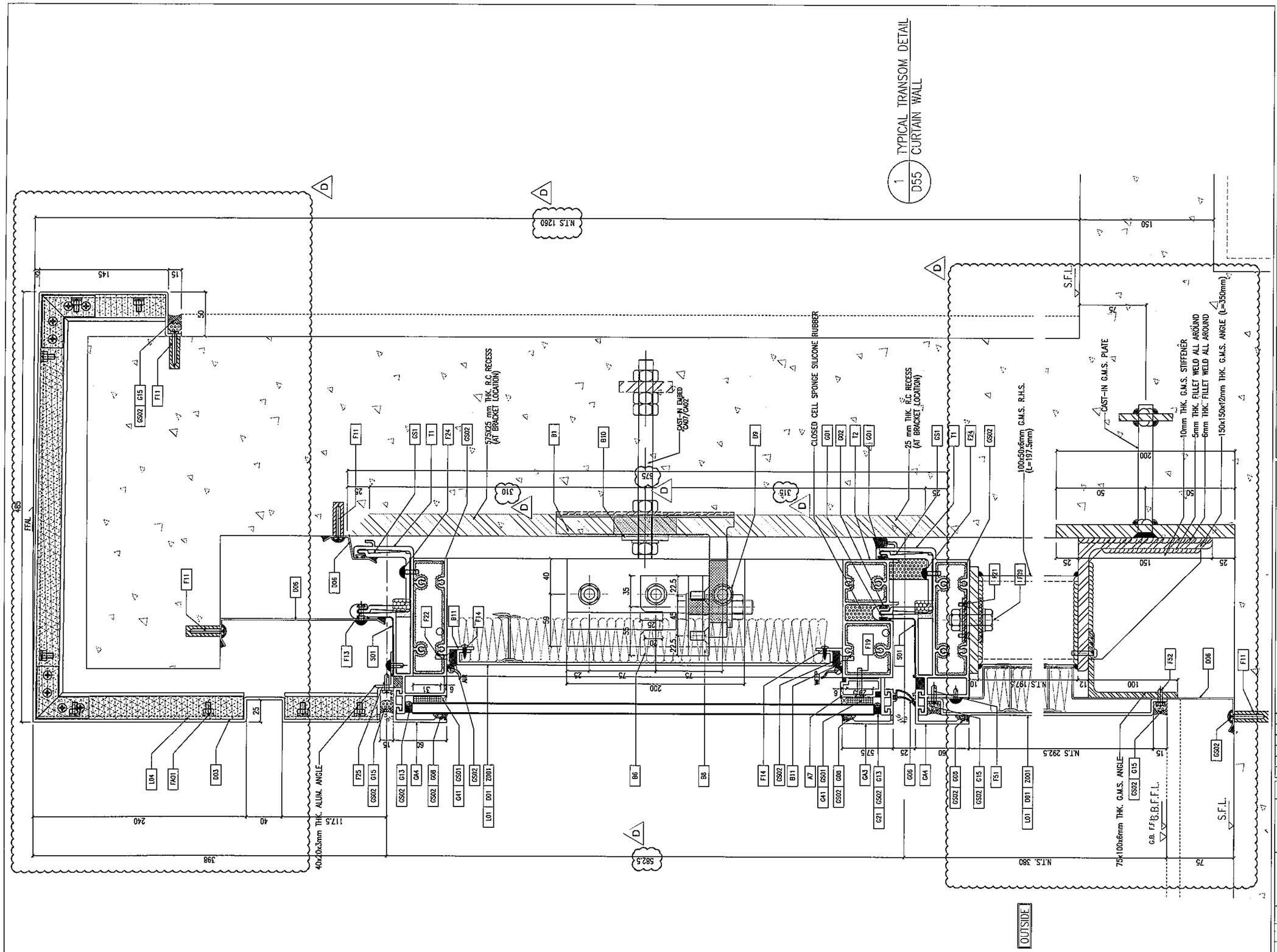

B.D. REF :

CLIENT :
信和置業有限公司
Sino Land Company Limited

ARCHITECT :
ronald lu & partners
Architects . Planners . Interior Designers
Ronald Lu & Partners (HK) Ltd.
呂元祥建築師事務所(香港)有限公司

MAIN CONTRACTOR :
Gammon

STRUCTURAL ENGINEER :
AECOM

FACADE CONSULTANT:
AECOM

NOTE :
1. ALL DIMENSIONS ARE IN mm.
2. ALL ELEVATIONS ARE VIEWED FROM OUTSIDE.
3. ALL DIMENSIONS TO BE VERIFIED ON SITE BEFORE FABRICATION.

LEGEND :
X1 — DETAIL MARK NO.
X001 — REFER SHEET NO.
1. F.F.L. --FINISHED FLOOR LEVEL
2. S.F.L. --STRUCTURAL FLOOR LEVEL
3. /R --REVERSED DETAIL

NO.	DATE	REVISED	BY
D	25/05/22	REVISED AS PER COMMENTS	LS
C	07/04/22	REVISED AS PER COMMENTS	LS
B	25/01/22	REVISED AS PER COMMENTS	LS
A	23/12/21	REVISED AS PER COMMENTS	LS

JOB NO. : J-858

PROJECT :
PROPOSED RESIDENTIAL DEVELOPMENT
AT TKOTL 70RP, PHASE 11, LOHAS PARK
TSEUNG KWAN O, N.T.

TITLE :
TYPICAL MULLION DETAIL
FOR CURTAIN WALL

DATE : 22-OCT-21 | SCALE : 1:2(A1)

DRAWN BY : | CHECKED BY :

美特鋁製有限公司
MIDI ALUMINIUM FABRICATOR LTD.
Units 6-8, Sunray Industrial Centre, 1/F
610 Cha Kwo Ling Road, Kowloon
Tel:23489211-4 Fax:(852)27727666

DWG NO. : J858-CW-D55 | REV. : D

1 / D56 TYPICAL TRANSOM DETAIL CURTAIN WALL

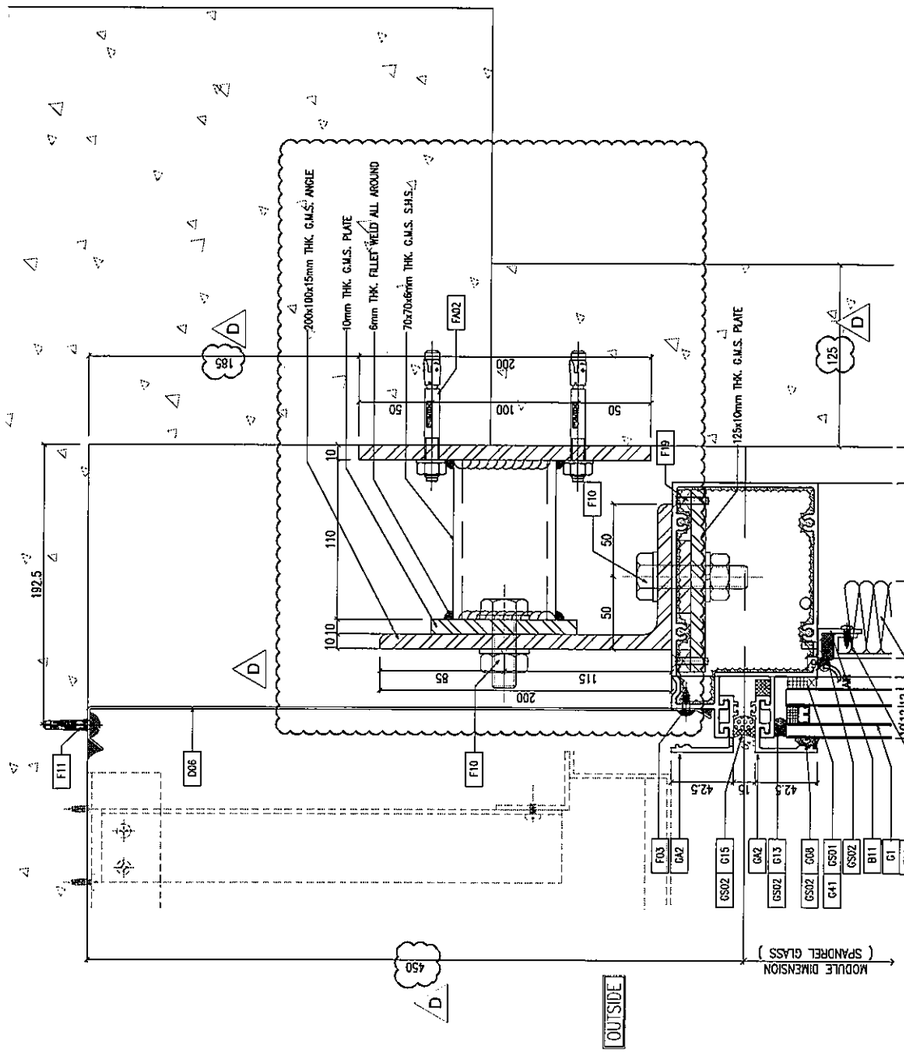

2 / D56 TYPICAL TRANSOM DETAIL CURTAIN WALL

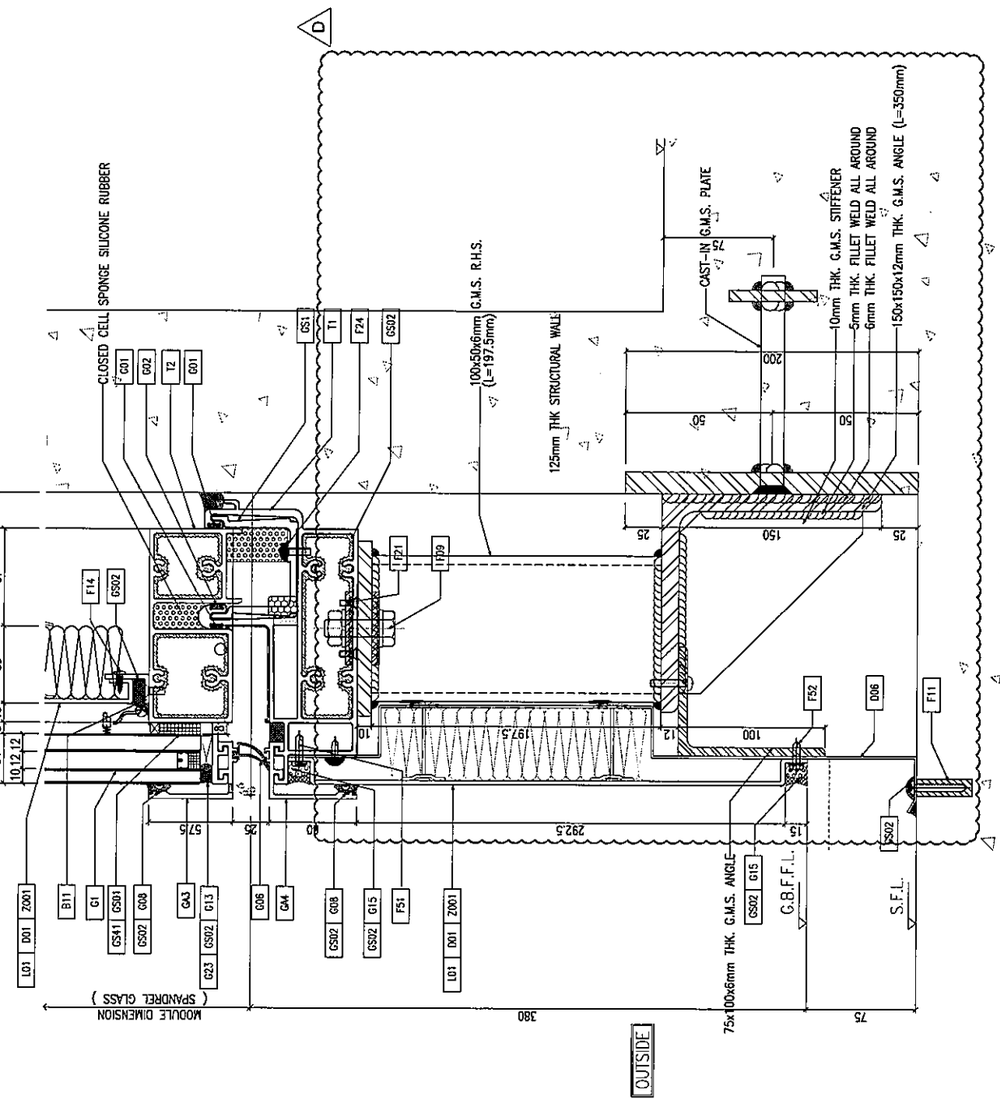

B.D. REF :

CLIENT :
信和置業有限公司
Sino Land Company Limited

ARCHITECT :
ronald lu & partners
Architects . Planners . Interior Designers
Ronald Lu & Partners (HK) Ltd.
呂元祥建築師事務所(香港)有限公司

MAIN CONTRACTOR :
Gammon

STRUCTURAL ENGINEER :
AECOM

FACADE CONSULTANT:
AECOM

NOTE :
1. ALL DIMENSIONS ARE IN mm.
2. ALL ELEVATIONS ARE VIEWED FROM OUTSIDE.
3. ALL DIMENSIONS TO BE VERIFIED ON SITE BEFORE FABRICATION.

LEGEND :
X1 / X001 — DETAIL MARK NO. / REFER SHEET NO.
1. F.F.L. -- FINISHED FLOOR LEVEL
2. S.F.L. -- STRUCTURAL FLOOR LEVEL
3. /R -- REVERSED DETAIL

NO.	DATE	REVISED	BY
D	25/05/22	REVISED AS PER COMMENTS	LS
C	07/04/22	REVISED AS PER COMMENTS	LS
B	25/01/22	REVISED AS PER COMMENTS	LS
A	23/12/21	REVISED AS PER COMMENTS	LS

JOB NO. : J-858

PROJECT :
PROPOSED RESIDENTIAL DEVELOPMENT
AT TKOTL 70RP, PHASE 11, LOHAS PARK
TSEUNG KWAN O, N.T.

TITLE :
TYPICAL MULLION DETAIL
FOR CURTAIN WALL

DATE : 22-OCT-21 | SCALE : 1:2(A1)

DRAWN BY : | CHECKED BY :

美特鋁質有限公司
MIDI ALUMINIUM FABRICATOR LTD.
Units 6-8, Sunray Industrial Centre, 1/F
610 Cha Kwo Ling Road, Kowloon
Tel:23489211-4 Fax:(852)27727666

DWG NO. : J858-CW-D56 | REV. : D

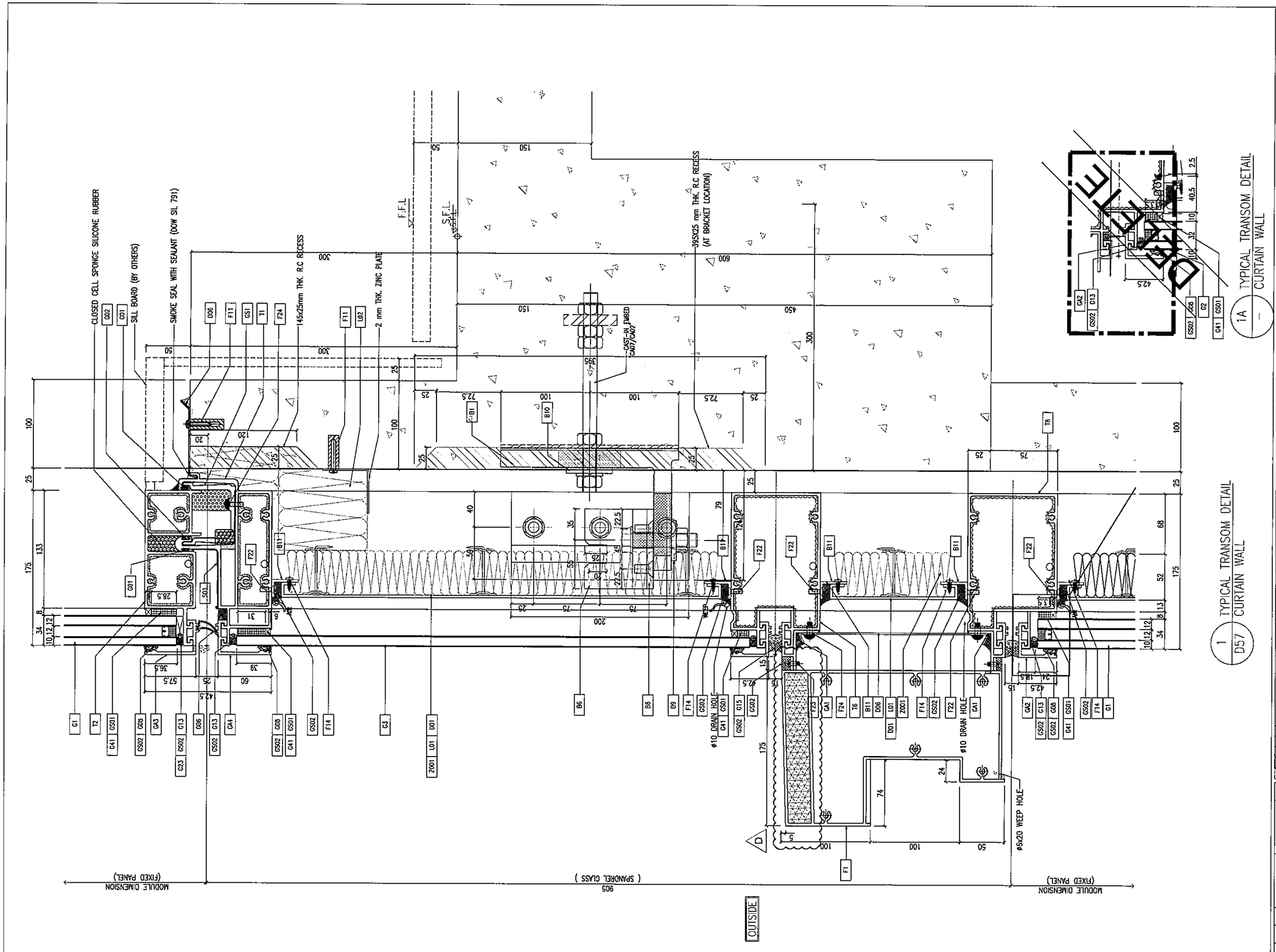

B.D. REF :

CLIENT :
信和置業有限公司
Sino Land Company Limited

ARCHITECT :
ronald lu & partners
Architects . Planners . Interior Designers
Ronald Lu & Partners (HK) Ltd.
呂元祥建築師事務所(香港)有限公司

MAIN CONTRACTOR :
Gammon

STRUCTURAL ENGINEER :
AECOM

FACADE CONSULTANT:
AECOM

NOTE :
1. ALL DIMENSIONS ARE IN mm.
2. ALL ELEVATIONS ARE VIEWED FROM OUTSIDE.
3. ALL DIMENSIONS TO BE VERIFIED ON SITE BEFORE FABRICATION.

LEGEND :
X1 — DETAIL MARK NO.
X001 — REFER SHEET NO.

1. F.F.L. --FINISHED FLOOR LEVEL
2. S.F.L. --STRUCTURAL FLOOR LEVEL
3. /R --REVERSED DETAIL

NO.	DATE	REVISED	BY
D	25/05/22	REVISED AS PER COMMENTS	LS
C	07/04/22	REVISED AS PER COMMENTS	LS
B	25/01/22	REVISED AS PER COMMENTS	LS
A	23/12/21	REVISED AS PER COMMENTS	LS

JOB NO. : J-858

PROJECT :
PROPOSED RESIDENTIAL DEVELOPMENT
AT TKOTL 70RP, PHASE 11, LOHAS PARK
TSEUNG KWAN O, N.T.

TITLE :
TYPICAL MULLION DETAIL
FOR CURTAIN WALL

DATE : 22-OCT-21 | SCALE : 1:2(A1)

DRAWN BY : | CHECKED BY :

美特鋁質有限公司
MIDI ALUMINIUM FABRICATOR LTD.
Units 6-8, Sunray Industrial Centre, 1/F
610 Cha Kwo Ling Road, Kowloon
Tel:23489211-4 Fax:(852)27727666

DWG NO. : J858-CW-D57 | REV. : D

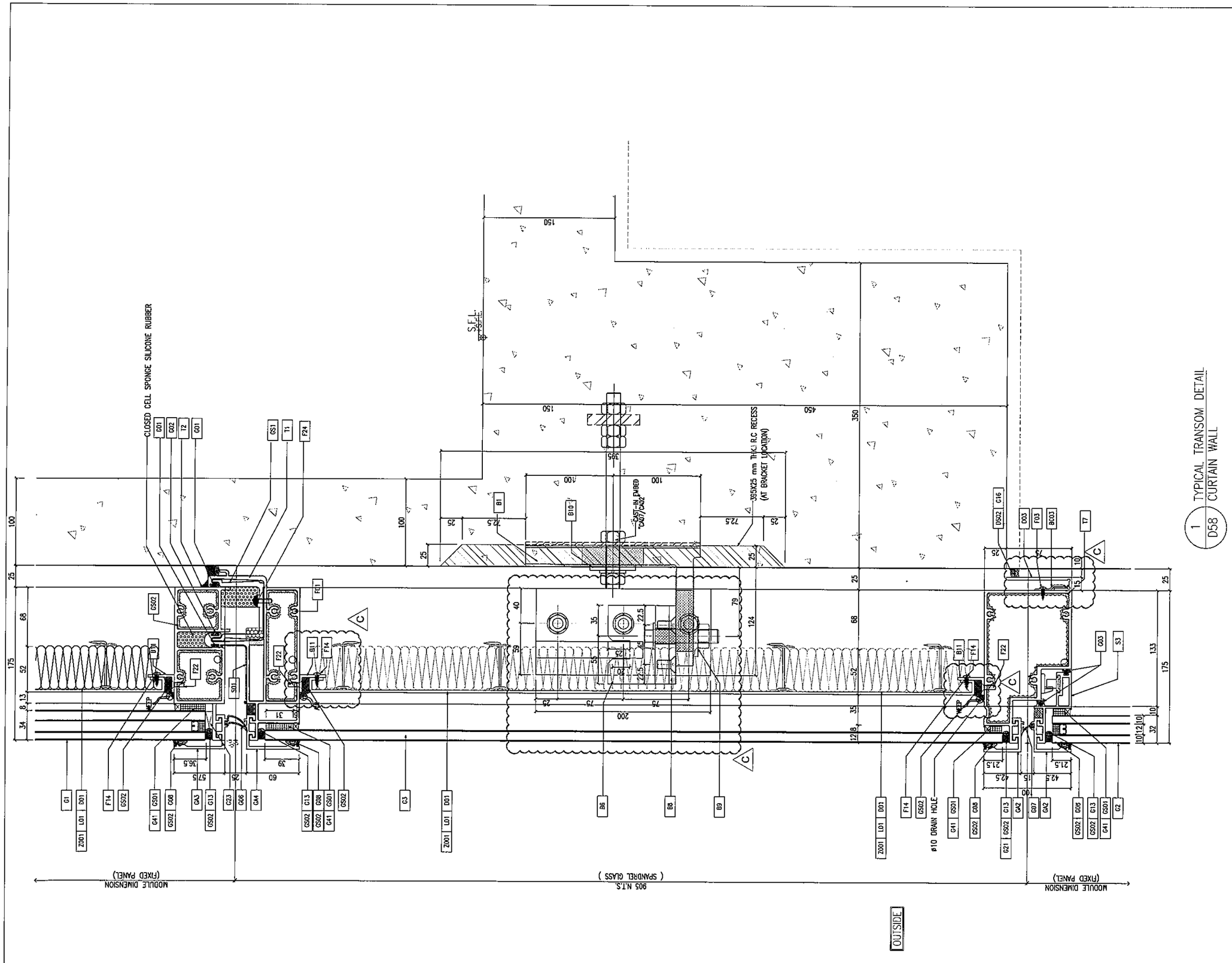

1 TYPICAL TRANSOM DETAIL
D58 CURTAIN WALL

B.D. REF :

CLIENT :
信和置業有限公司
Sino Land Company Limited

ARCHITECT :
ronald lu & partners
Architects, Planners, Interior Designers
Ronald Lu & Partners (HK) Ltd.
呂元祥建築師事務所(香港)有限公司

MAIN CONTRACTOR :
Gammon

STRUCTURAL ENGINEER :
AECOM

FACADE CONSULTANT:
AECOM

NOTE :
1. ALL DIMENSIONS ARE IN mm.
2. ALL ELEVATIONS ARE VIEWED FROM OUTSIDE.
3. ALL DIMENSIONS TO BE VERIFIED ON SITE BEFORE FABRICATION.

LEGEND :
X1 — DETAIL MARK NO.
X001 — REFER SHEET NO.

1. F.F.L. -- FINISHED FLOOR LEVEL
2. S.F.L. -- STRUCTURAL FLOOR LEVEL
3. /R -- REVERSED DETAIL

NO.	DATE	REVISED	BY
C	07/04/22	REVISED AS PER COMMENTS	LS
B	25/01/22	REVISED AS PER COMMENTS	LS
A	23/12/21	REVISED AS PER COMMENTS	LS

JOB NO. : J-858

PROJECT :
PROPOSED RESIDENTIAL DEVELOPMENT
AT TKOTL 70RP, PHASE 11, LOHAS PARK
TSEUNG KWAN O, N.T.

TITLE :
TYPICAL MULLION DETAIL
FOR CURTAIN WALL

DATE : 22-OCT-21 | SCALE : 1:2(A1)

DRAWN BY : | CHECKED BY :

美特鋁質有限公司
MIDI ALUMINIUM FABRICATOR LTD.
Units 6-8, Sunray Industrial Centre, 1/F
610 Cha Kwo Ling Road, Kowloon
Tel:23489211-4 Fax:(852)27727666

DWG NO. : J858-CW-D58 | REV. : C

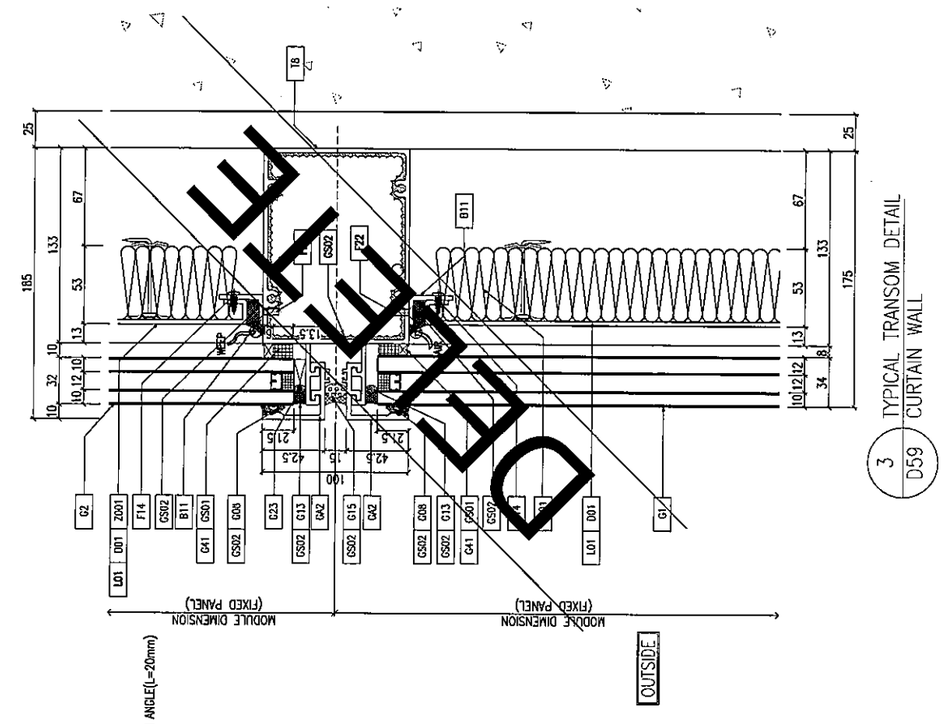

B.D. REF :

CLIENT :
信和置業有限公司
Sino Land Company Limited

ARCHITECT :
ronald lu & partners
Architects . Planners . Interior Designers
Ronald Lu & Partners (HK) Ltd.
呂元祥建築師事務所(香港)有限公司

MAIN CONTRACTOR :
Gammon

STRUCTURAL ENGINEER :
AECOM

FACADE CONSULTANT:
AECOM

NOTE :
1. ALL DIMENSIONS ARE IN mm.
2. ALL ELEVATIONS ARE VIEWED FROM OUTSIDE.
3. ALL DIMENSIONS TO BE VERIFIED ON SITE BEFORE FABRICATION.

LEGEND :
- X1 / K001 — DETAIL MARK NO. / REFER SHEET NO.
1. F.F.L. -- FINISHED FLOOR LEVEL
2. S.F.L. -- STRUCTURAL FLOOR LEVEL
3. /R -- REVERSED DETAIL

NO.	DATE	REVISED	BY
D	25/05/22	REVISED AS PER COMMENTS	LS
C	07/04/22	REVISED AS PER COMMENTS	LS
B	25/01/22	REVISED AS PER COMMENTS	LS
A	23/12/21	REVISED AS PER COMMENTS	LS

JOB NO. : J-858

PROJECT :
PROPOSED RESIDENTIAL DEVELOPMENT
AT TKOTL 70RP, PHASE 11, LOHAS PARK
TSEUNG KWAN O, N.T.

TITLE :
TYPICAL MULLION DETAIL
FOR CURTAIN WALL

DATE : 22-OCT-21 | SCALE : 1:2(A1)

DRAWN BY : | CHECKED BY :

美特鋁質有限公司
MIDI ALUMINIUM FABRICATOR LTD.
Units 6-8, Sunray Industrial Centre, 1/F
610 Cha Kwo Ling Road, Kowloon
Tel:23489211-4 Fax:(852)27727666

DWG NO. : J858-CW-D59 | REV. : D

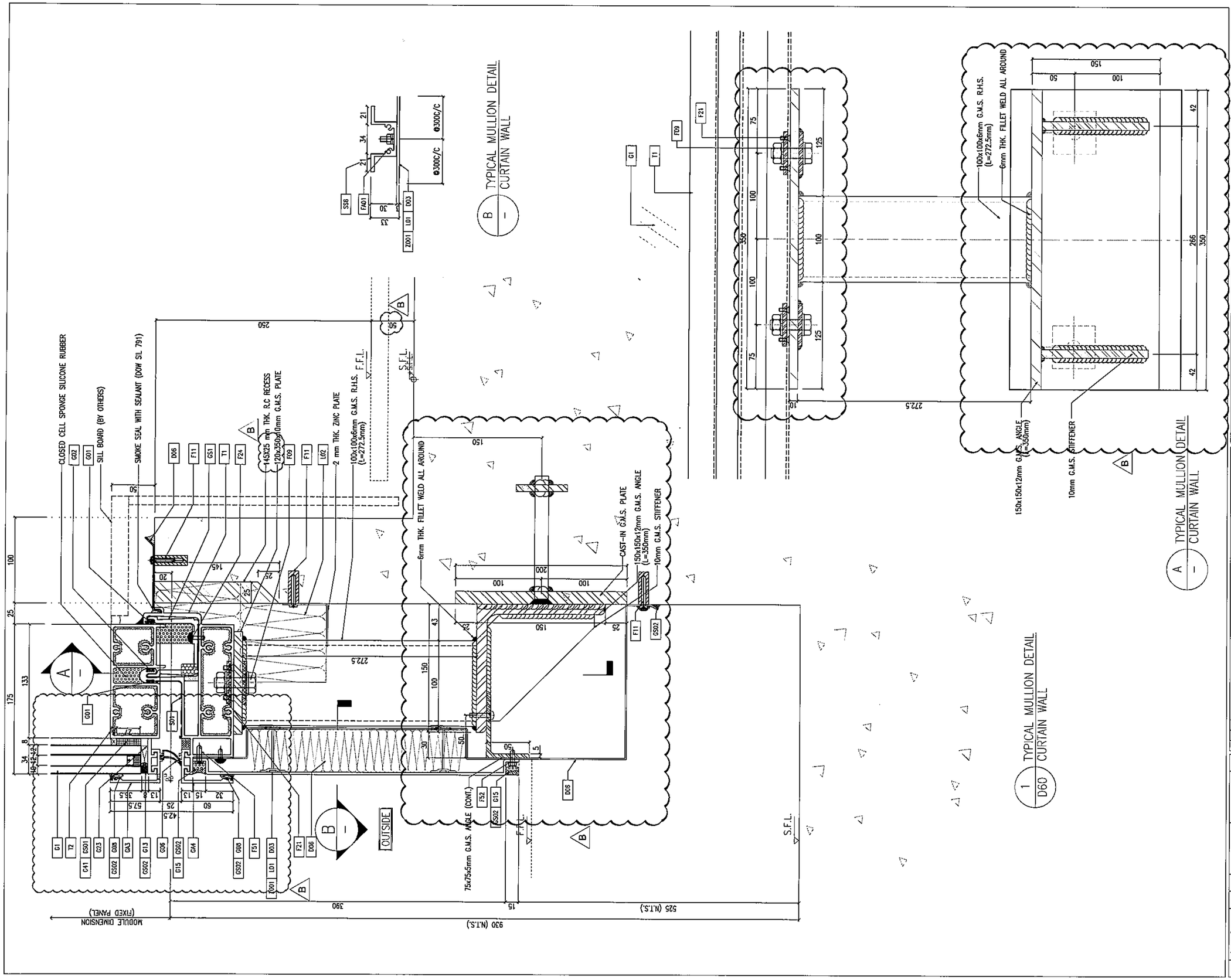

B.D. REF :

CLIENT :
信和置業有限公司
Sino Land Company Limited

ARCHITECT :
ronald lu & partners
Architects · Planners · Interior Designers
Ronald Lu & Partners (HK) Ltd.
呂元祥建築師事務所(香港)有限公司

MAIN CONTRACTOR :
Gammon

STRUCTURAL ENGINEER :
AECOM

FACADE CONSULTANT:
AECOM

NOTE :
1. ALL DIMENSIONS ARE IN mm.
2. ALL ELEVATIONS ARE VIEWED FROM OUTSIDE.
3. ALL DIMENSIONS TO BE VERIFIED ON SITE BEFORE FABRICATION.

LEGEND :
- X1 / X001 — DETAIL MARK NO. / REFER SHEET NO.
1. F.F.L. --FINISHED FLOOR LEVEL
2. S.F.L. --STRUCTURAL FLOOR LEVEL
3. /R --REVERSED DETAIL

NO.	DATE	REVISED	BY
B	25/01/22	REVISED AS PER COMMENTS	LS
A	23/12/21	REVISED AS PER COMMENTS	LS

JOB NO. : J-858

PROJECT :
PROPOSED RESIDENTIAL DEVELOPMENT
AT TKOTL 70RP, PHASE 11, LOHAS PARK
TSEUNG KWAN O, N.T.

TITLE :
TYPICAL MULLION DETAIL
FOR CURTAIN WALL

DATE : 22-OCT-21 | SCALE : 1:2(A1)

DRAWN BY : | CHECKED BY :

美特鋁質有限公司
MIDI ALUMINIUM FABRICATOR LTD.
Units 6-8, Sunray Industrial Centre, 1/F
610 Cha Kwo Ling Road, Kowloon
Tel:23489211-4 Fax:(852)27727666

DWG NO. : J858-CW-D60 | REV. : B

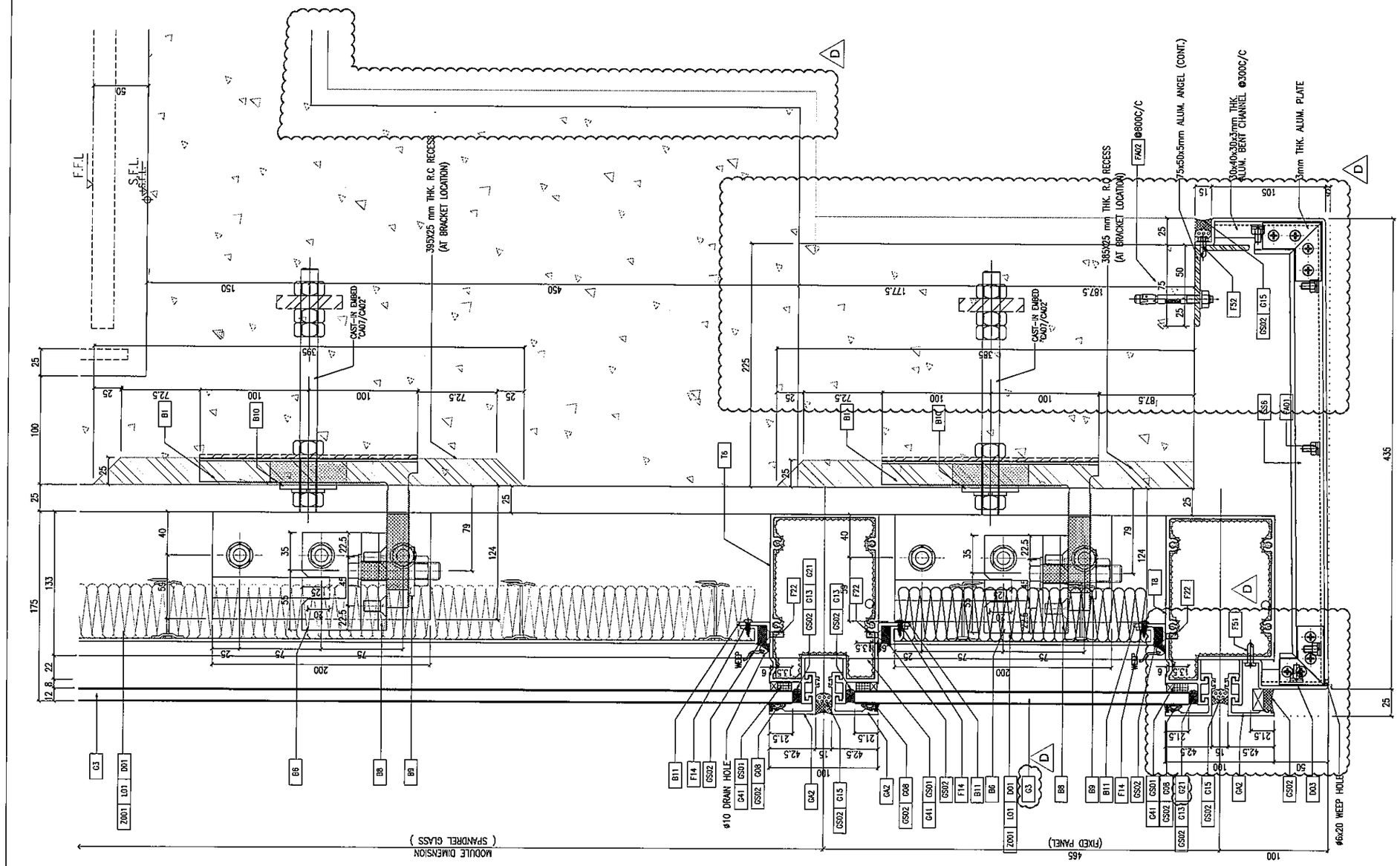

1 TYPICAL TRANSOM DETAIL
D61 CURTAIN WALL

B.D. REF :

CLIENT :
信和置業有限公司
Sino Land Company Limited

ARCHITECT :
ronald lu & partners
Architects · Planners · Interior Designers
Ronald Lu & Partners (HK) Ltd.
呂元祥建築師事務所(香港)有限公司

MAIN CONTRACTOR :
Gammon

STRUCTURAL ENGINEER :
AECOM

FACADE CONSULTANT:
AECOM

NOTE :
1. ALL DIMENSIONS ARE IN mm.
2. ALL ELEVATIONS ARE VIEWED FROM OUTSIDE.
3. ALL DIMENSIONS TO BE VERIFIED ON SITE BEFORE FABRICATION.

LEGEND :
X1 — DETAIL MARK NO.
X001 — REFER SHEET NO.
1. F.F.L. --FINISHED FLOOR LEVEL
2. S.F.L. --STRUCTURAL FLOOR LEVEL
3. (R) --REVERSED DETAIL

NO.	DATE.	REVISED	BY
D	25/05/22	REVISED AS PER COMMENTS	LS
C	07/04/22	REVISED AS PER COMMENTS	LS
B	25/01/22	REVISED AS PER COMMENTS	LS
A	23/12/21	REVISED AS PER COMMENTS	LS

JOB NO. : J-858

PROJECT :
PROPOSED RESIDENTIAL DEVELOPMENT
AT TKOTL 70RP, PHASE 11, LOHAS PARK
TSEUNG KWAN O, N.T.

TITLE :
TYPICAL MULLION DETAIL
FOR CURTAIN WALL

DATE : 22-OCT-21 | SCALE : 1:2(A1)

DRAWN BY : | CHECKED BY :

美特鋁質有限公司
MIDI ALUMINUM FABRICATOR LTD.
Units 6-8, Sunray Industrial Centre, 1/F
610 Cha Kwo Ling Road, Kowloon
Tel:23489211-4 Fax:(852)27727666

DWG NO. : J858-CW-D61 | REV. : D

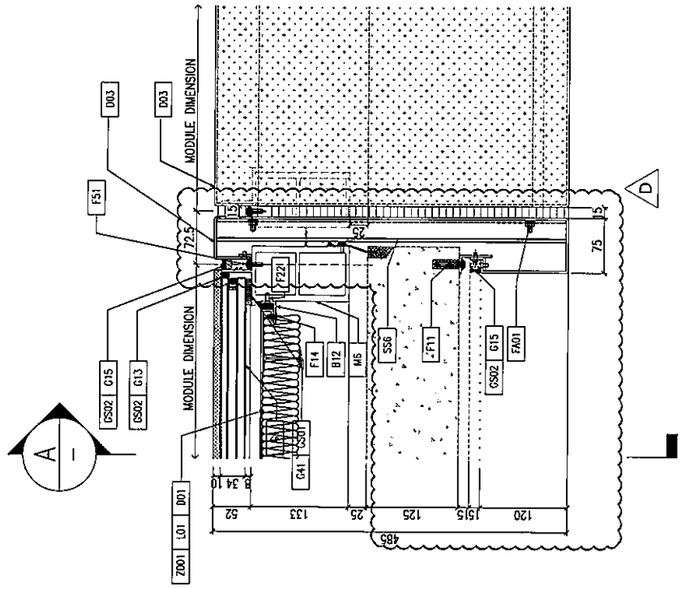

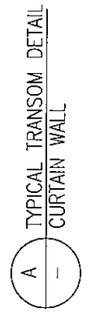

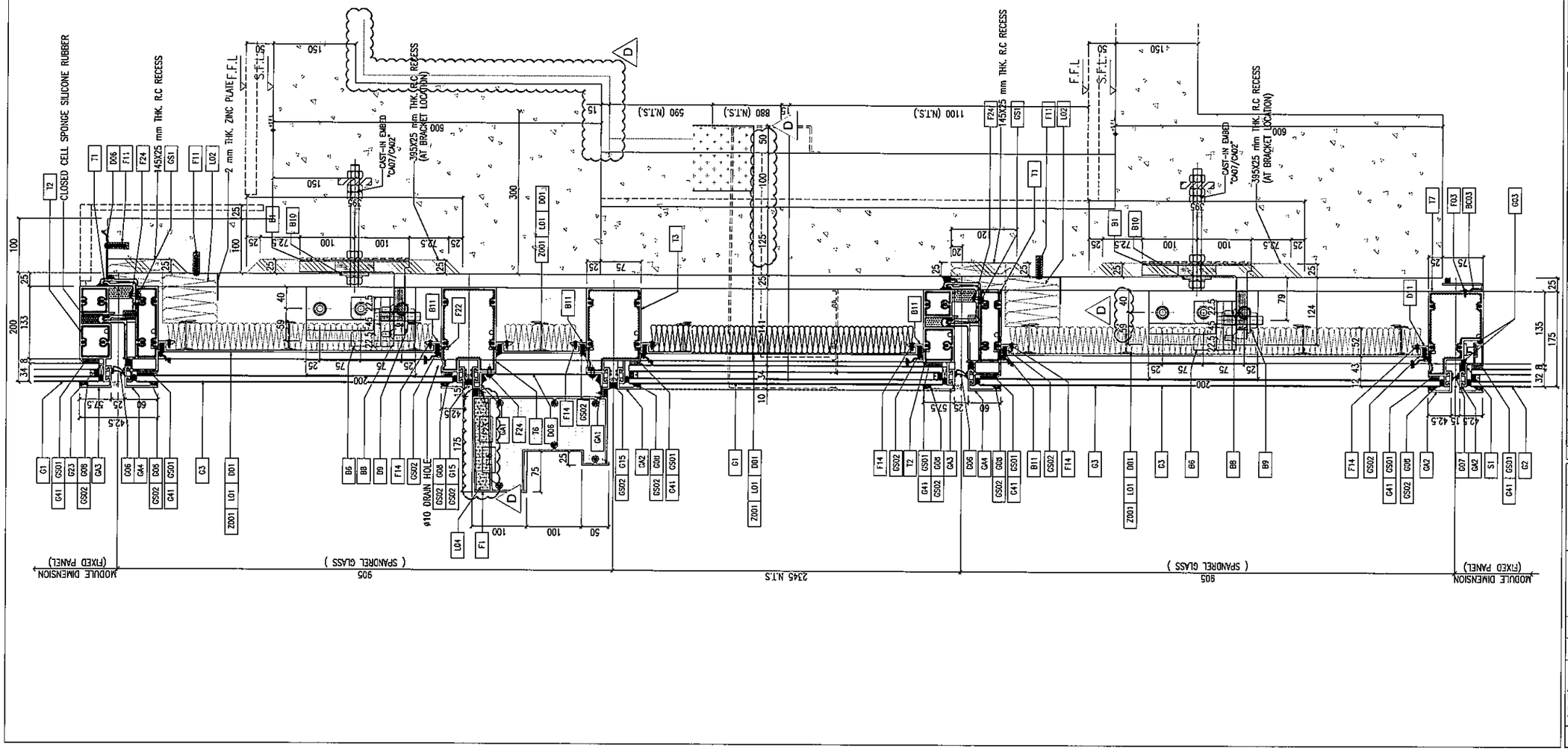

B.D. REF :

CLIENT :
信和置業有限公司
Sino Land Company Limited

ARCHITECT :
ronald lu & partners
Architects Planners Interior Designers
Ronald Lu & Partners (HK) Ltd.
呂元祥建築師事務所(香港)有限公司

MAIN CONTRACTOR :
Gammon

STRUCTURAL ENGINEER :
AECOM

FACADE CONSULTANT:
AECOM

NOTE :
1. ALL DIMENSIONS ARE IN mm.
2. ALL ELEVATIONS ARE VIEWED FROM OUTSIDE.
3. ALL DIMENSIONS TO BE VERIFIED ON SITE BEFORE FABRICATION.

LEGEND :
X1 — DETAIL MARK NO.
X001 — REFER SHEET NO.
1. F.F.L. --FINISHED FLOOR LEVEL
2. S.F.L. --STRUCTURAL FLOOR LEVEL
3. (/R) --REVERSED DETAIL

NO.	DATE	REVISED	BY
D	25/05/22	REVISED AS PER COMMENTS	LS
C	07/04/22	REVISED AS PER COMMENTS	LS
B	25/01/22	REVISED AS PER COMMENTS	LS
A	23/12/21	REVISED AS PER COMMENTS	LS

JOB NO. : J-858

PROJECT :
PROPOSED RESIDENTIAL DEVELOPMENT
AT TKOTL 70RP, PHASE 11, LOHAS PARK
TSEUNG KWAN O, N.T.

TITLE :
TYPICAL MULLION DETAIL
FOR CURTAIN WALL

DATE : 22-OCT-21 | SCALE : 1:4(A1)

DRAWN BY : | CHECKED BY :

美特鋁質有限公司
MIDI ALUMINIUM FABRICATOR LTD.
Units 6-8, Sunray Industrial Centre, 1/F
610 Cha Kwo Ling Road, Kowloon
Tel:23489211-4 Fax:(852)27727666

DWG NO. : J858-CW-D62 | REV. : D

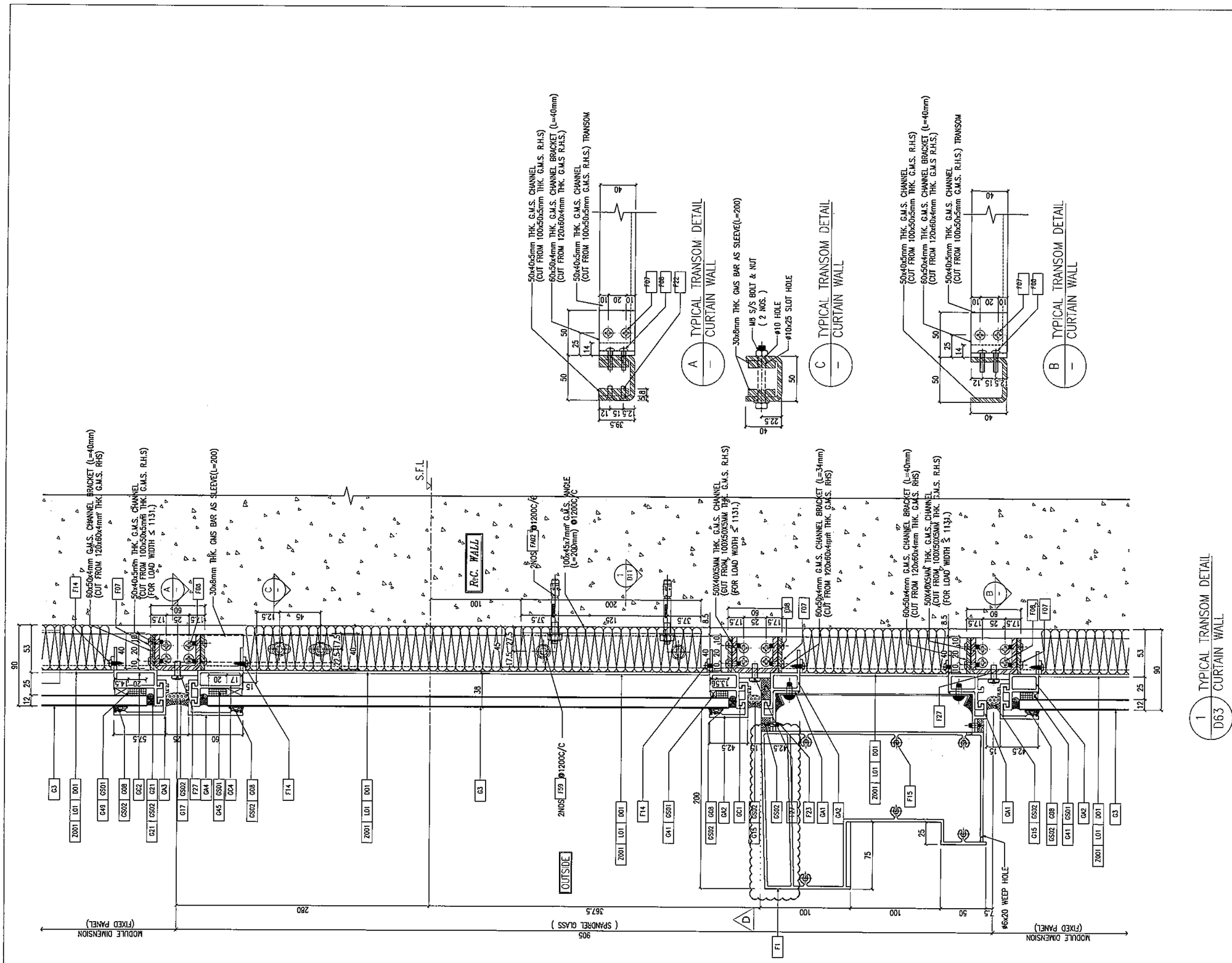

B.D. REF :

CLIENT :
信和置業有限公司
Sino Land Company Limited

ARCHITECT :
ronald lu & partners
Architects . Planners . Interior Designers
Ronald Lu & Partners (HK) Ltd.
呂元祥建築師事務所(香港)有限公司

MAIN CONTRACTOR :
Gammon

STRUCTURAL ENGINEER :
AECOM

FACADE CONSULTANT:
AECOM

NOTE :
1. ALL DIMENSIONS ARE IN mm.
2. ALL ELEVATIONS ARE VIEWED FROM OUTSIDE.
3. ALL DIMENSIONS TO BE VERIFIED ON SITE BEFORE FABRICATION.

LEGEND :
X1 — DETAIL MARK NO.
X001 — REFER SHEET NO.
1. F.F.L. --FINISHED FLOOR LEVEL
2. S.F.L. --STRUCTURAL FLOOR LEVEL
3. /R --REVERSED DETAIL

NO.	DATE	REVISED	BY
D	25/05/22	REVISED AS PER COMMENTS	LS
C	07/04/22	REVISED AS PER COMMENTS	LS
B	25/01/22	REVISED AS PER COMMENTS	LS
A	03/12/21	REVISED AS PER COMMENTS	LS

JOB NO. : J-858

PROJECT :
PROPOSED RESIDENTIAL DEVELOPMENT
AT TKOTL 70RP, PHASE 11, LOHAS PARK
TSEUNG KWAN O, N.T.

TITLE :
TYPICAL MULLION DETAIL
FOR CURTAIN WALL

DATE : 22-OCT-21 | SCALE : 1:2(A1)

DRAWN BY : | CHECKED BY :

美特鋁質有限公司
MIDI ALUMINUM FABRICATOR LTD.
Units 6-8, Sunray Industrial Centre, 1/F
610 Cha Kwo Ling Road, Kowloon
Tel:23469211-4 Fax:(852)27727666

DWG NO. : J858-CW-D63 | REV. : D

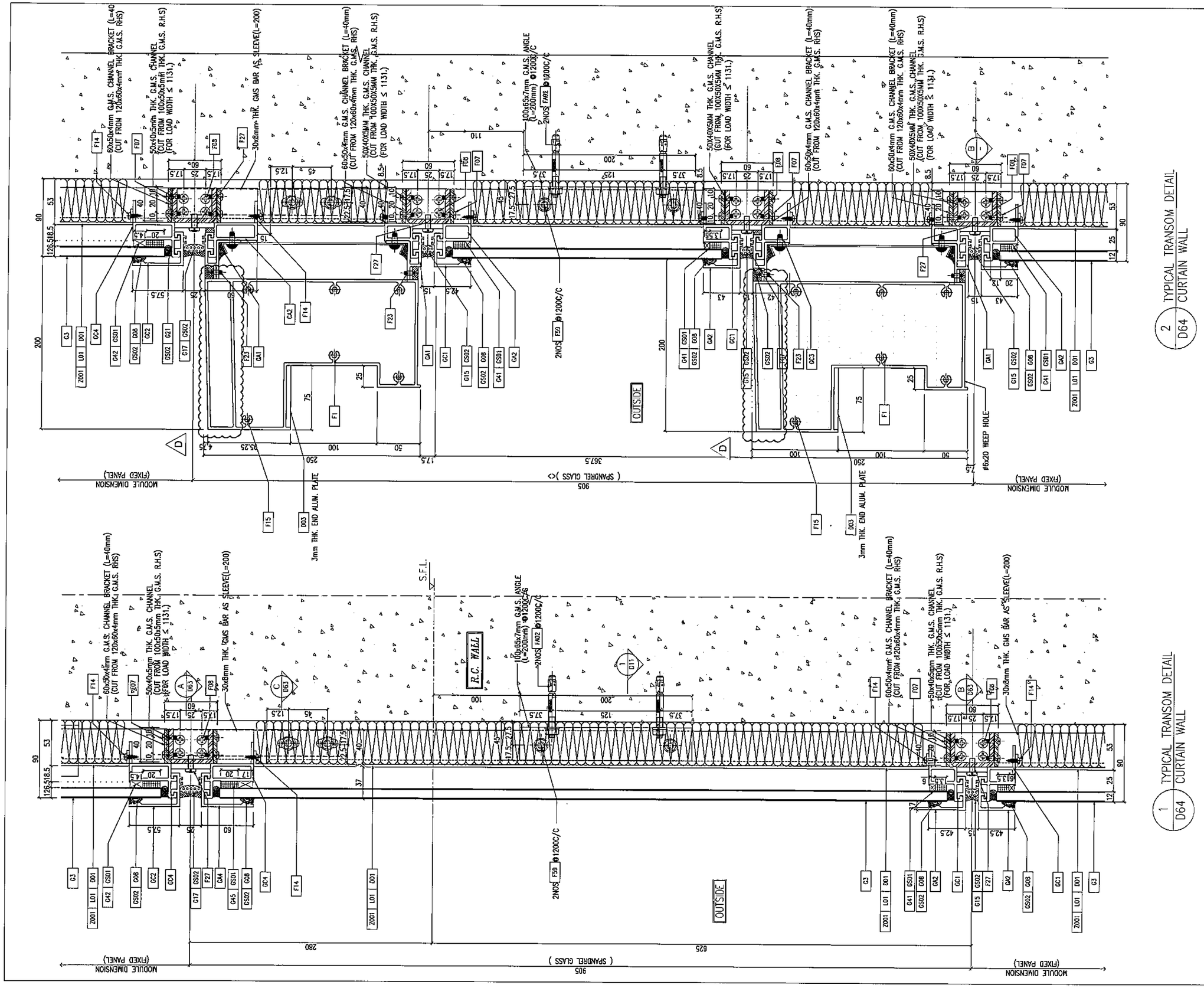

B.D. REF :

CLIENT :
信和置業有限公司
Sino Land Company Limited

ARCHITECT :
ronald lu & partners
Architects · Planners · Interior Designers
Ronald Lu & Partners (HK) Ltd.
呂元祥建築師事務所(香港)有限公司

MAIN CONTRACTOR :
Gammon

STRUCTURAL ENGINEER :
AECOM

FACADE CONSULTANT:
AECOM

NOTE :
1. ALL DIMENSIONS ARE IN mm.
2. ALL ELEVATIONS ARE VIEWED FROM OUTSIDE.
3. ALL DIMENSIONS TO BE VERIFIED ON SITE BEFORE FABRICATION.

LEGEND :
X1 — DETAIL MARK NO.
X001 — REFER SHEET NO.
1. F.F.L. --FINISHED FLOOR LEVEL
2. S.F.L. --STRUCTURAL FLOOR LEVEL
3. /R --REVERSED DETAIL

NO.	DATE	REVISED	BY
D	25/05/22	REVISED AS PER COMMENTS	LS
C	07/04/22	REVISED AS PER COMMENTS	LS
B	25/01/22	REVISED AS PER COMMENTS	LS
A	03/12/21	REVISED AS PER COMMENTS	LS

JOB NO. : J-858

PROJECT :
PROPOSED RESIDENTIAL DEVELOPMENT
AT TKOTL 70RP, PHASE 11, LOHAS PARK
TSEUNG KWAN O, N.T.

TITLE :
TYPICAL MULLION DETAIL
FOR CURTAIN WALL

DATE : 22-OCT-21 | SCALE : 1:2(A1)

DRAWN BY : | CHECKED BY :

美特鋁質有限公司
MIDI ALUMINUM FABRICATOR LTD.
Units 6-8, Sunray Industrial Centre, 1/F
610 Cha Kwo Ling Road, Kowloon
Tel:23489211-4 Fax:(852)27727666

DWG NO. : J858-CW-D64 | REV. : D

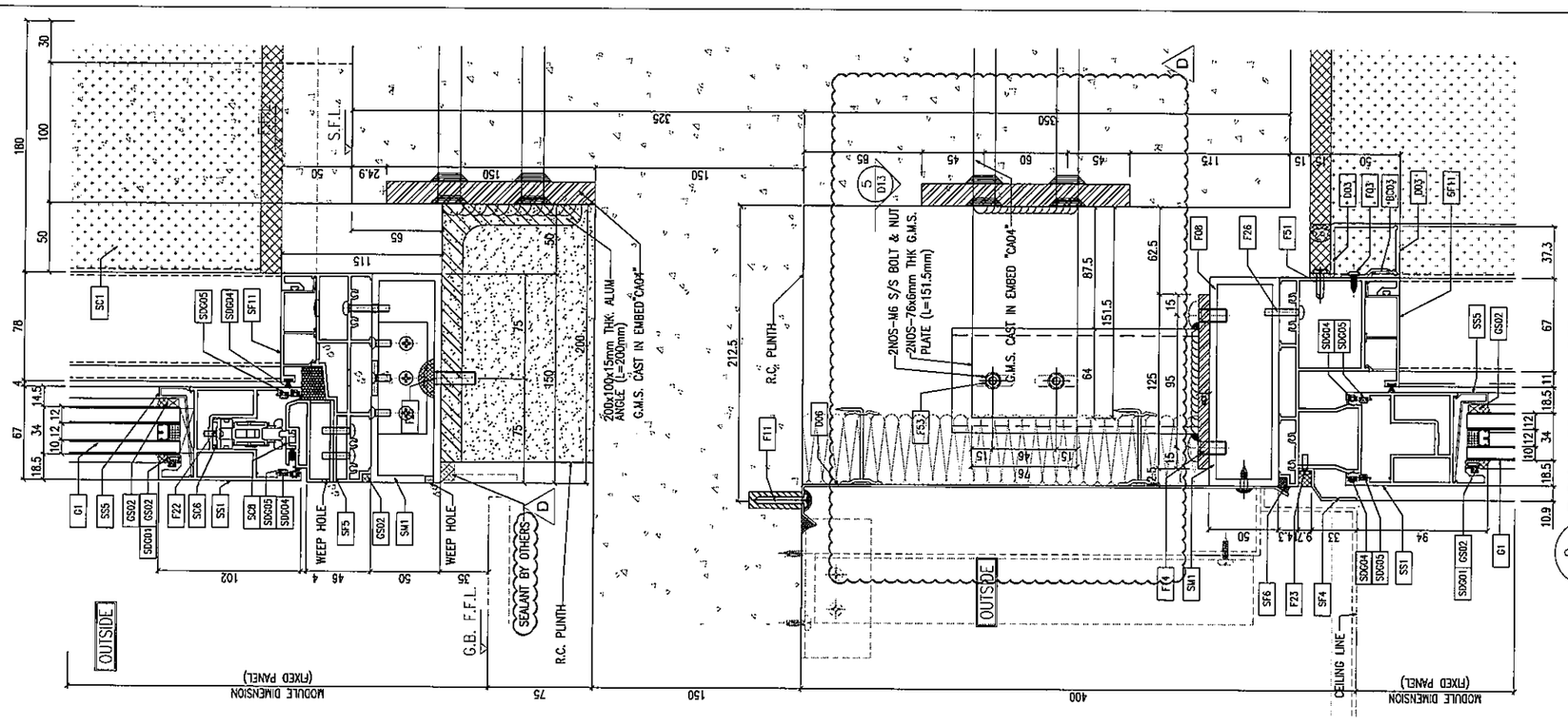

2 TYPICAL TRANSOM DETAIL
D65 SLIDING DOOR

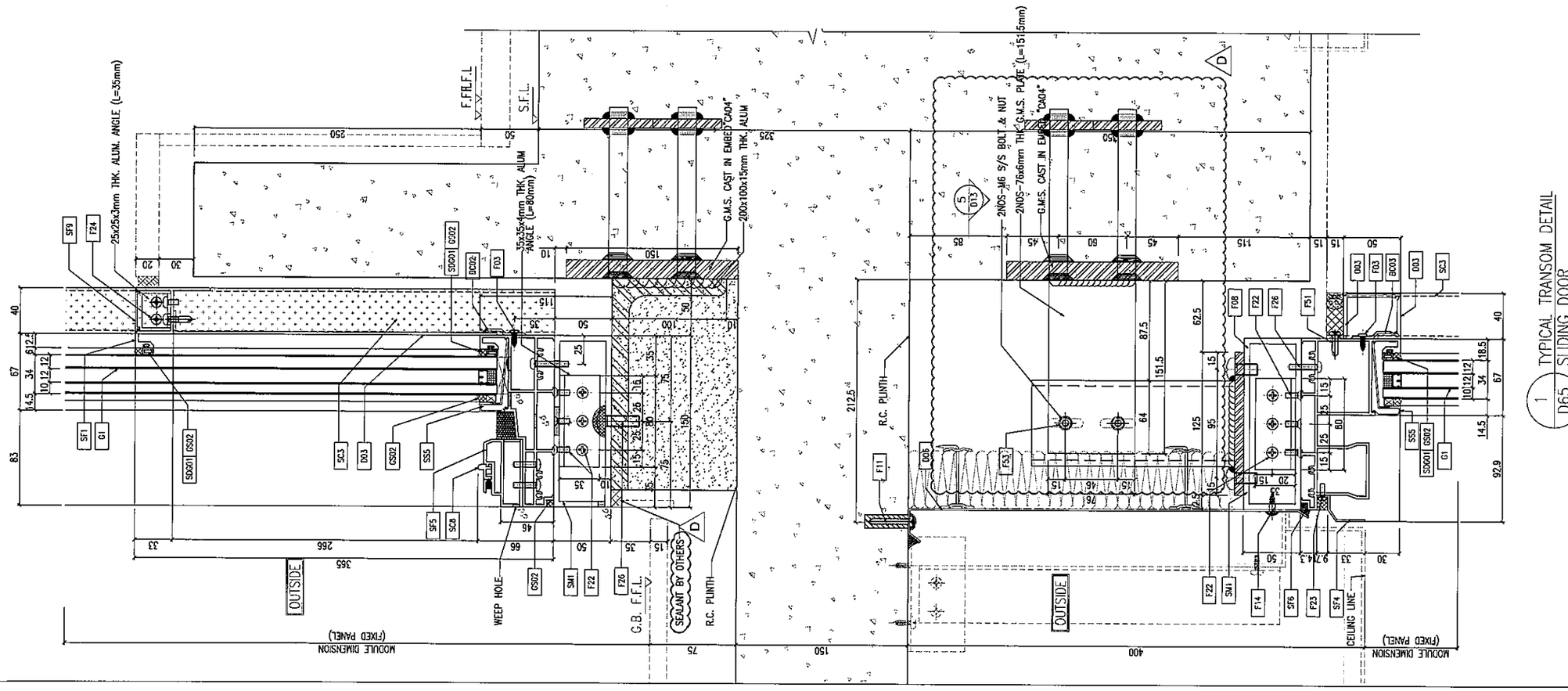

1 TYPICAL TRANSOM DETAIL
D65 SLIDING DOOR

B.D. REF :

CLIENT :
信和置業有限公司
Sino Land Company Limited

ARCHITECT :
ronald lu & partners
Architects . Planners . Interior Designers
Ronald Lu & Partners (HK) Ltd.
呂元祥建築師事務所(香港)有限公司

MAIN CONTRACTOR :
Gammon

STRUCTURAL ENGINEER :
AECOM

FACADE CONSULTANT:
AECOM

NOTE :
1. ALL DIMENSIONS ARE IN mm.
2. ALL ELEVATIONS ARE VIEWED FROM OUTSIDE.
3. ALL DIMENSIONS TO BE VERIFIED ON SITE BEFORE FABRICATION.

LEGEND :
- X1 / X001 — DETAIL MARK NO. / REFER SHEET NO.
1. F.F.L. -- FINISHED FLOOR LEVEL
2. S.F.L. -- STRUCTURAL FLOOR LEVEL
3. /R -- REVERSED DETAIL

NO.	DATE	REVISED	BY
D	25/05/22	REVISED AS PER COMMENTS	LS
C	07/04/22	REVISED AS PER COMMENTS	LS
B	20/12/21	REVISED AS PER COMMENTS	LS
A	03/12/21	REVISED AS PER COMMENTS	LS

JOB NO. : J-858

PROJECT :
PROPOSED RESIDENTIAL DEVELOPMENT
AT TKOTL 70RP, PHASE 11, LOHAS PARK
TSEUNG KWAN O, N.T.

TITLE :
TYPICAL MULLION DETAIL
FOR CURTAIN WALL

DATE : 22-OCT-21	SCALE : 1:2(A1)
DRAWN BY :	CHECKED BY :

美特鋁質有限公司
MIDI ALUMINTUM FABRICATOR LTD.
Units 6-8, Sunray Industrial Centre, 1/F
610 Cha Kwo Ling Road, Kowloon
Tel:23489211-4 Fax:(852)27727666

DWG NO. : J858-CW-D65 | REV. : D

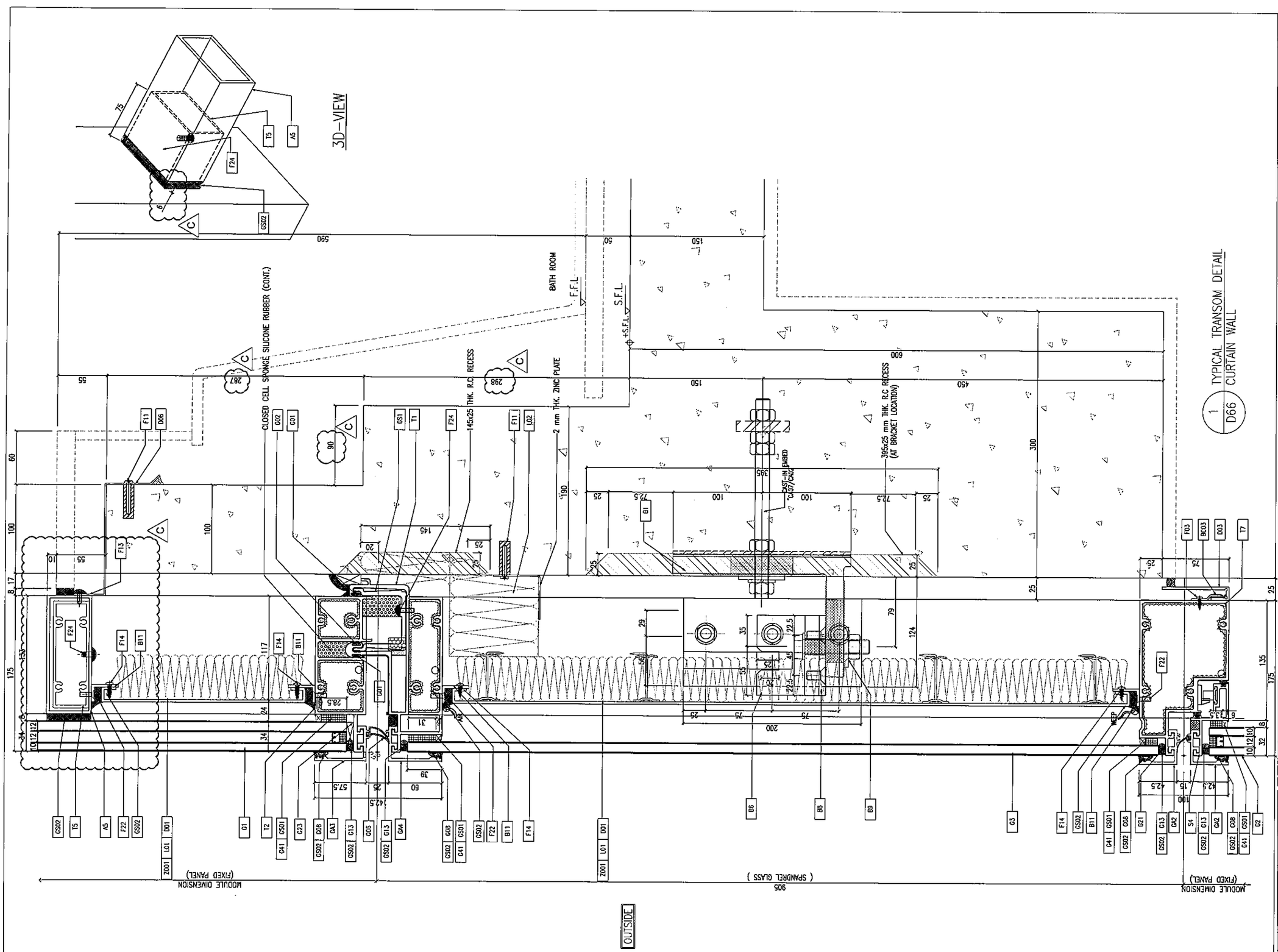

B.D. REF :

CLIENT :
信和置業有限公司
Sino Land Company Limited

ARCHITECT :
ronald lu & partners
Architects . Planners . Interior Designers
Ronald Lu & Partners (HK) Ltd.
呂元祥建築師事務所(香港)有限公司

MAIN CONTRACTOR :
Gammon

STRUCTURAL ENGINEER :
AECOM

FACADE CONSULTANT:
AECOM

NOTE :
1. ALL DIMENSIONS ARE IN mm.
2. ALL ELEVATIONS ARE VIEWED FROM OUTSIDE.
3. ALL DIMENSIONS TO BE VERIFIED ON SITE BEFORE FABRICATION.

LEGEND :
X1 — DETAIL MARK NO.
X001 — REFER SHEET NO.

1. F.F.L. --FINISHED FLOOR LEVEL
2. S.F.L. --STRUCTURAL FLOOR LEVEL
3. (/R) --REVERSED DETAIL

NO.	DATE	REVISED	BY
C	25/05/22	REVISED AS PER COMMENTS	LS
B	07/04/22	REVISED AS PER COMMENTS	LS
A	25/01/22	REVISED AS PER COMMENTS	LS

JOB NO. : J-858

PROJECT :
PROPOSED RESIDENTIAL DEVELOPMENT
AT TKOTL 70RP, PHASE 11, LOHAS PARK
TSEUNG KWAN O, N.T.

TITLE :
TYPICAL MULLION DETAIL
FOR CURTAIN WALL

DATE : 22-OCT-21 | SCALE : 1:2(A1)

DRAWN BY : | CHECKED BY :

美特鋁質有限公司
MIDI ALUMINIUM FABRICATOR LTD.
Units 6-8, Sunray Industrial Centre, 1/F
610 Cha Kwo Ling Road, Kowloon
Tel:23489211-4 Fax:(852)27727666

DWG NO. : J858-CW-D66 | REV. : C

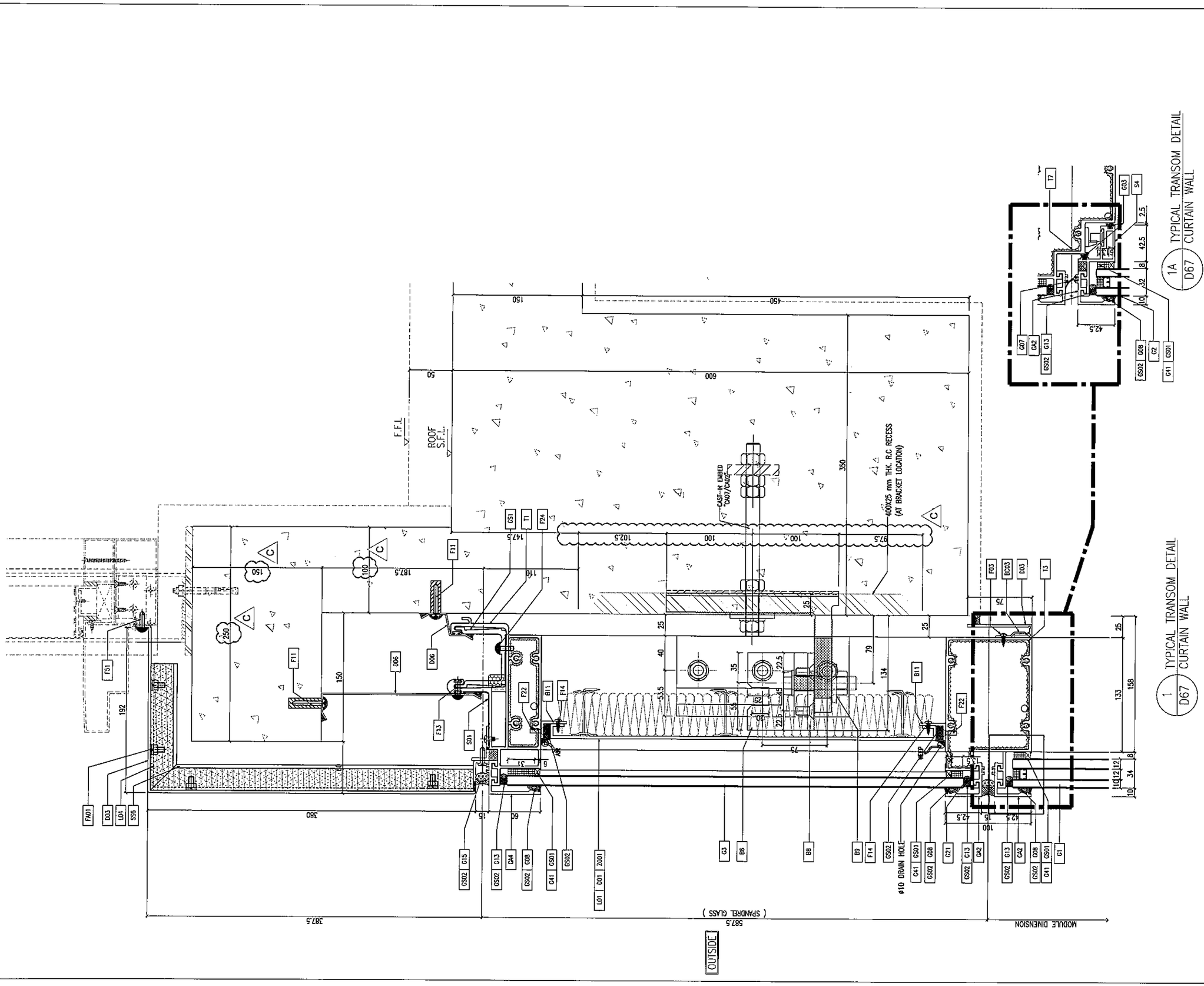

B.D. REF :

CLIENT :
信和置業有限公司
Sino Land Company Limited

ARCHITECT :
ronald lu & partners
Architects, Planners, Interior Designers
Ronald Lu & Partners (HK) Ltd.
呂元祥建築師事務所(香港)有限公司

MAIN CONTRACTOR :
Gammon

STRUCTURAL ENGINEER :
AECOM

FACADE CONSULTANT:
AECOM

NOTE :
1. ALL DIMENSIONS ARE IN mm.
2. ALL ELEVATIONS ARE VIEWED FROM OUTSIDE.
3. ALL DIMENSIONS TO BE VERIFIED ON SITE BEFORE FABRICATION.

LEGEND :
K1 — DETAIL MARK NO.
K001 — REFER SHEET NO.

1. F.F.L. --FINISHED FLOOR LEVEL
2. S.F.L. --STRUCTURAL FLOOR LEVEL
3. /R --REVERSED DETAIL

NO.	DATE	REVISED	BY
C	25/05/22	REVISED AS PER COMMENTS	LS
B	07/04/22	REVISED AS PER COMMENTS	LS
A	25/01/22	REVISED AS PER COMMENTS	LS

JOB NO. : J-858

PROJECT :
PROPOSED RESIDENTIAL DEVELOPMENT
AT TKOTL 70RP, PHASE 11, LOHAS PARK
TSEUNG KWAN O, N.T.

TITLE :
TYPICAL MULLION DETAIL
FOR CURTAIN WALL

DATE : 22-OCT-21 | SCALE : 1:2(A1)

DRAWN BY : | CHECKED BY :

美特鋁質有限公司
MIDI ALUMINIUM FABRICATOR LTD.
Units 6-8, Sunray Industrial Centre, 1/F
610 Cha Kwo Ling Road, Kowloon
Tel:23489211-4 Fax:(852)27727666

DWG NO. : J858-CW-D67 | REV. : C

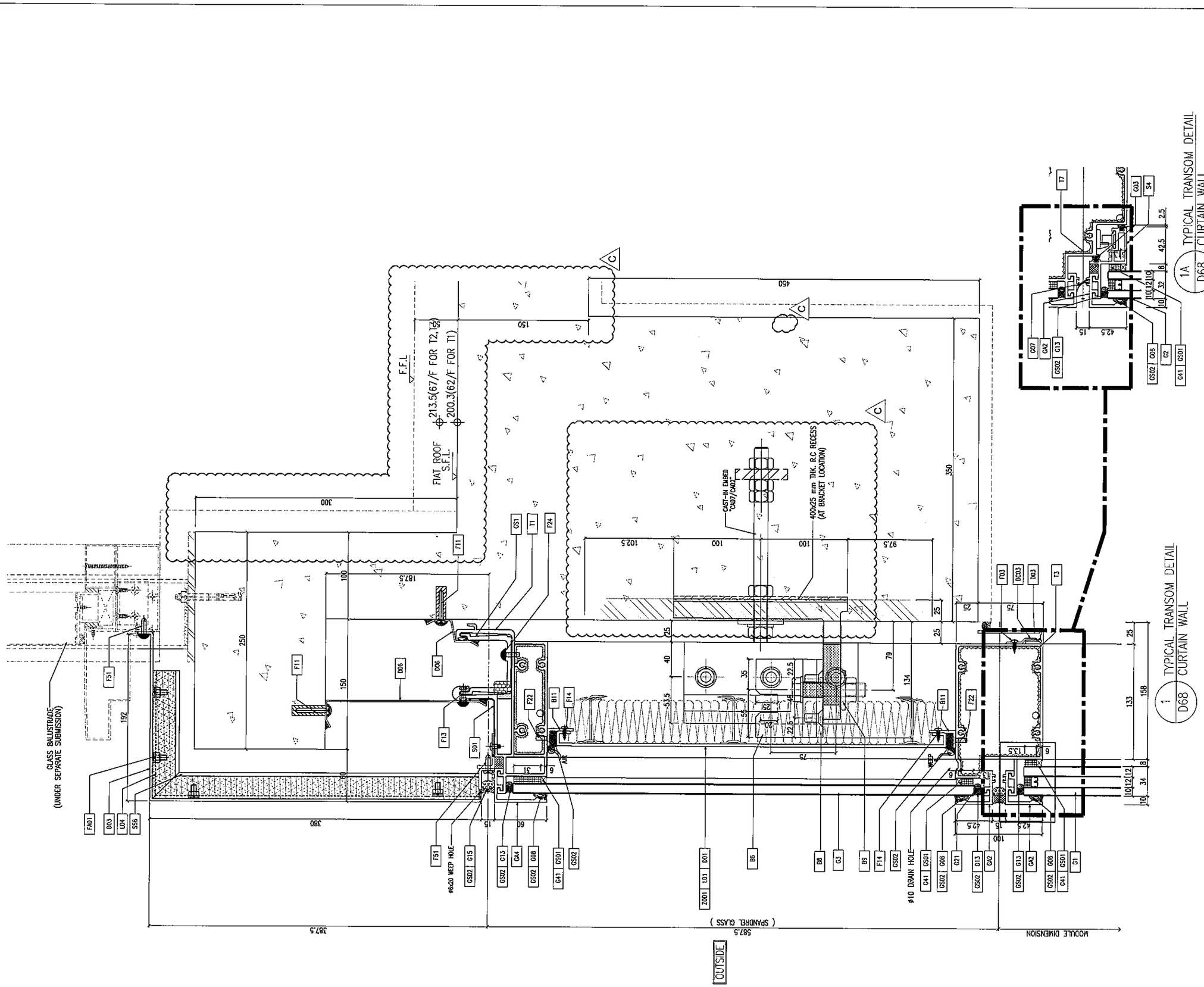

1A TYPICAL TRANSOM DETAIL
D68 CURTAIN WALL

1 TYPICAL TRANSOM DETAIL
D68 CURTAIN WALL

B.D. REF :

CLIENT :
信和置業有限公司
Sino Land Company Limited

ARCHITECT :
ronald lu & partners
Architects . Planners . Interior Designers
Ronald Lu & Partners (HK) Ltd.
呂元祥建築師事務所(香港)有限公司

MAIN CONTRACTOR :
Gammon

STRUCTURAL ENGINEER :
AECOM

FACADE CONSULTANT:
AECOM

NOTE :
1. ALL DIMENSIONS ARE IN mm.
2. ALL ELEVATIONS ARE VIEWED FROM OUTSIDE.
3. ALL DIMENSIONS TO BE VERIFIED ON SITE BEFORE FABRICATION.

LEGEND :
X1 — DETAIL MARK NO.
X001 — REFER SHEET NO.

1. F.F.L. --FINISHED FLOOR LEVEL
2. S.F.L. --STRUCTURAL FLOOR LEVEL
3. (78) --REVERSED DETAIL

NO.	DATE	REVISED	BY
C	25/05/22	REVISED AS PER COMMENTS	LS
B	07/04/22	REVISED AS PER COMMENTS	LS
A	25/01/22	REVISED AS PER COMMENTS	LS

JOB NO. : J-858

PROJECT :
PROPOSED RESIDENTIAL DEVELOPMENT
AT TKOTL 70RP, PHASE 11, LOHAS PARK
TSEUNG KWAN O, N.T.

TITLE :
TYPICAL MULLION DETAIL
FOR CURTAIN WALL

DATE : 22-OCT-21 | SCALE : 1:2(A1)

DRAWN BY : | CHECKED BY :

美特鋁質有限公司
MIDI ALUMINIUM FABRICATOR LTD.
Units 6-8, Sunray Industrial Centre, 1/F
610 Cha Kwo Ling Road, Kowloon
Tel:23489211-4 Fax:(852)27727666

DWG NO. : J858--CW-D68 | REV. : C

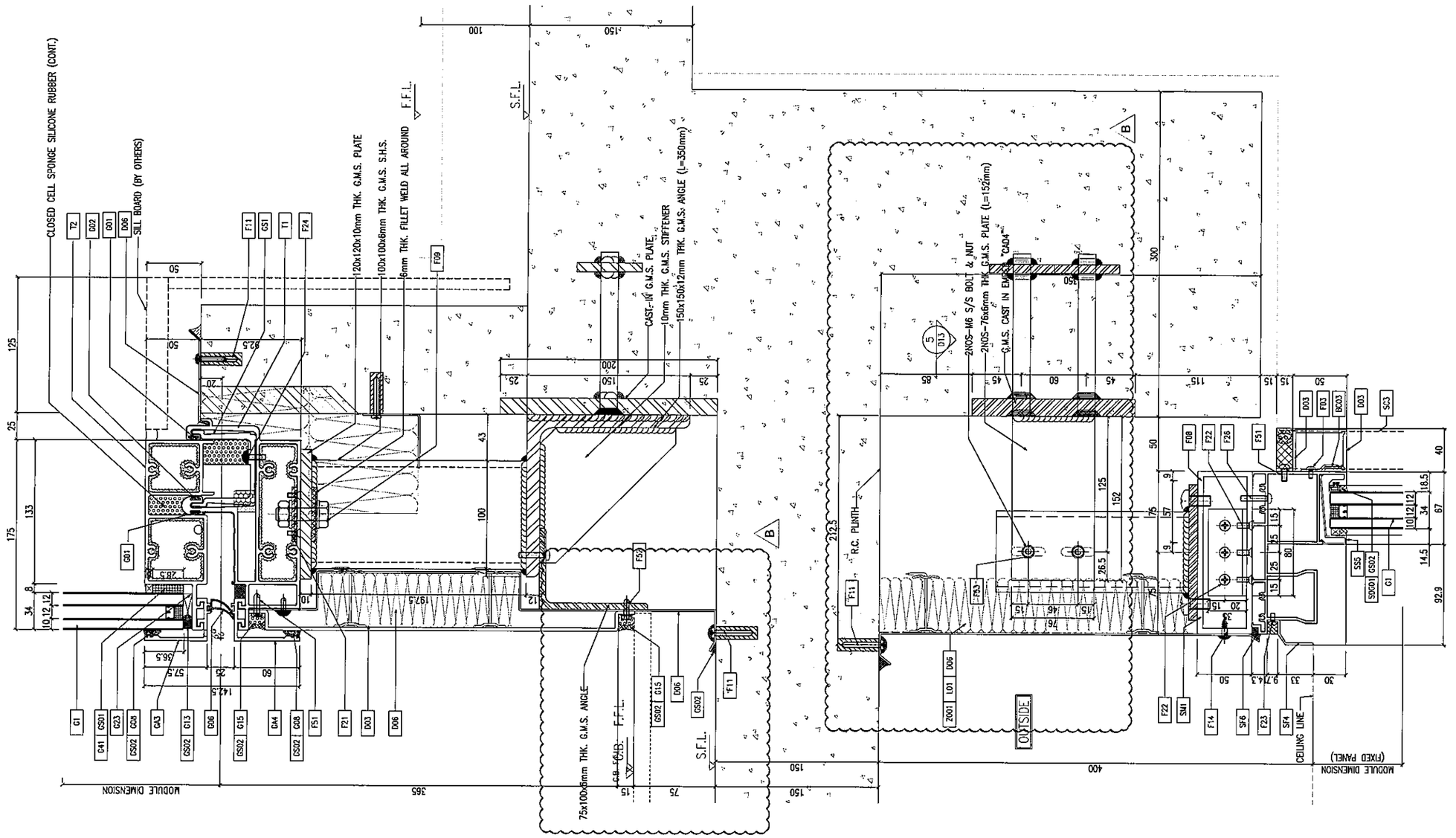

1 D69 TYPICAL TRANSOM DETAIL CURTAIN WALL

B.D. REF :

CLIENT :
信和置業有限公司
Sino Land Company Limited

ARCHITECT :
ronald lu & partners
Architects . Planners . Interior Designers
Ronald Lu & Partners (HK) Ltd.
呂元祥建築師事務所(香港)有限公司

MAIN CONTRACTOR :
Gammon

STRUCTURAL ENGINEER :
AECOM

FACADE CONSULTANT:
AECOM

NOTE :
1. ALL DIMENSIONS ARE IN mm.
2. ALL ELEVATIONS ARE VIEWED FROM OUTSIDE.
3. ALL DIMENSIONS TO BE VERIFIED ON SITE BEFORE FABRICATION.

LEGEND :
- X1 / X001 — DETAIL MARK NO. / REFER SHEET NO.
1. F.F.L. --FINISHED FLOOR LEVEL
2. S.F.L. --STRUCTURAL FLOOR LEVEL
3. /R --REVERSED DETAIL

NO.	DATE	REVISED	BY
A	25/01/22	REVISED AS PER COMMENTS	LS

JOB NO. : J-858

PROJECT :
PROPOSED RESIDENTIAL DEVELOPMENT
AT TKOTL 70RP, PHASE 11, LOHAS PARK
TSEUNG KWAN O, N.T.

TITLE :
TYPICAL MULLION DETAIL
FOR CURTAIN WALL

DATE : 22-OCT-21 | SCALE : 1:2(A1)

DRAWN BY : | CHECKED BY :

美特鋁質有限公司
MIDI ALUMINIUM FABRICATOR LTD.
Units 6-8, Sunray Industrial Centre, 1/F
610 Cha Kwo Ling Road, Kowloon
Tel:23489211-4 Fax:(852)27727666

DWG NO. : J858-CW-D69 | REV. : A

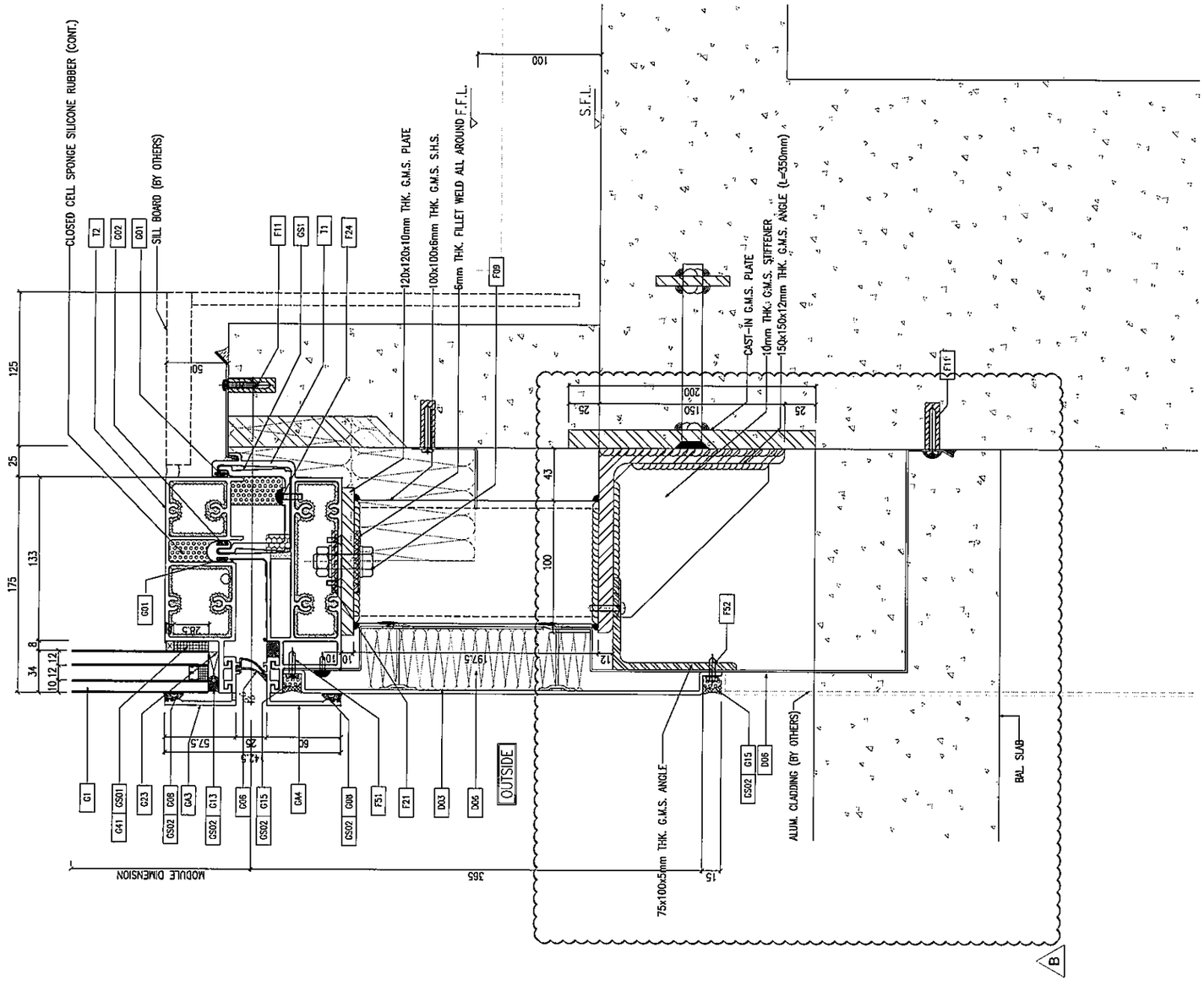

1 TYPICAL TRANSOM DETAIL OF CURTAIN WALL D70

B

B.D. REF :

CLIENT :
信和置業有限公司
Sino Land Company Limited

ARCHITECT :
ronald lu & partners
Architects . Planners . Interior Designers
Ronald Lu & Partners (HK) Ltd.
呂元祥建築師事務所(香港)有限公司

MAIN CONTRACTOR :
Gammon

STRUCTURAL ENGINEER :
AECOM

FACADE CONSULTANT:
AECOM

NOTE :
1. ALL DIMENSIONS ARE IN mm.
2. ALL ELEVATIONS ARE VIEWED FROM OUTSIDE.
3. ALL DIMENSIONS TO BE VERIFIED ON SITE BEFORE FABRICATION.

LEGEND :
X1 — DETAIL MARK NO.
X001 — REFER SHEET NO.
1. F.F.L. --FINISHED FLOOR LEVEL
2. S.F.L. --STRUCTURAL FLOOR LEVEL
3. /R --REVERSED DETAIL

NO.	DATE	REVISED	BY
B	25/05/22	REVISED AS PER COMMENTS	LS
A	25/01/22	REVISED AS PER COMMENTS	LS

JOB NO. : J-858

PROJECT :
PROPOSED RESIDENTIAL DEVELOPMENT
AT TKOTL 70RP, PHASE 11, LOHAS PARK
TSEUNG KWAN O, N.T.

TITLE :
TYPICAL MULLION DETAIL
FOR CURTAIN WALL

DATE : 22-OCT-21 | SCALE : 1:2(A1)

DRAWN BY : | CHECKED BY :

美特鋁質有限公司
MIDI ALUMINIUM FABRICATOR LTD.
Units 6-8, Sunray Industrial Centre, 1/F
610 Cha Kwo Ling Road, Kowloon
Tel:23469211-4 Fax:(852)27727666

DWG NO. : J858-CW-070 | REV. : B

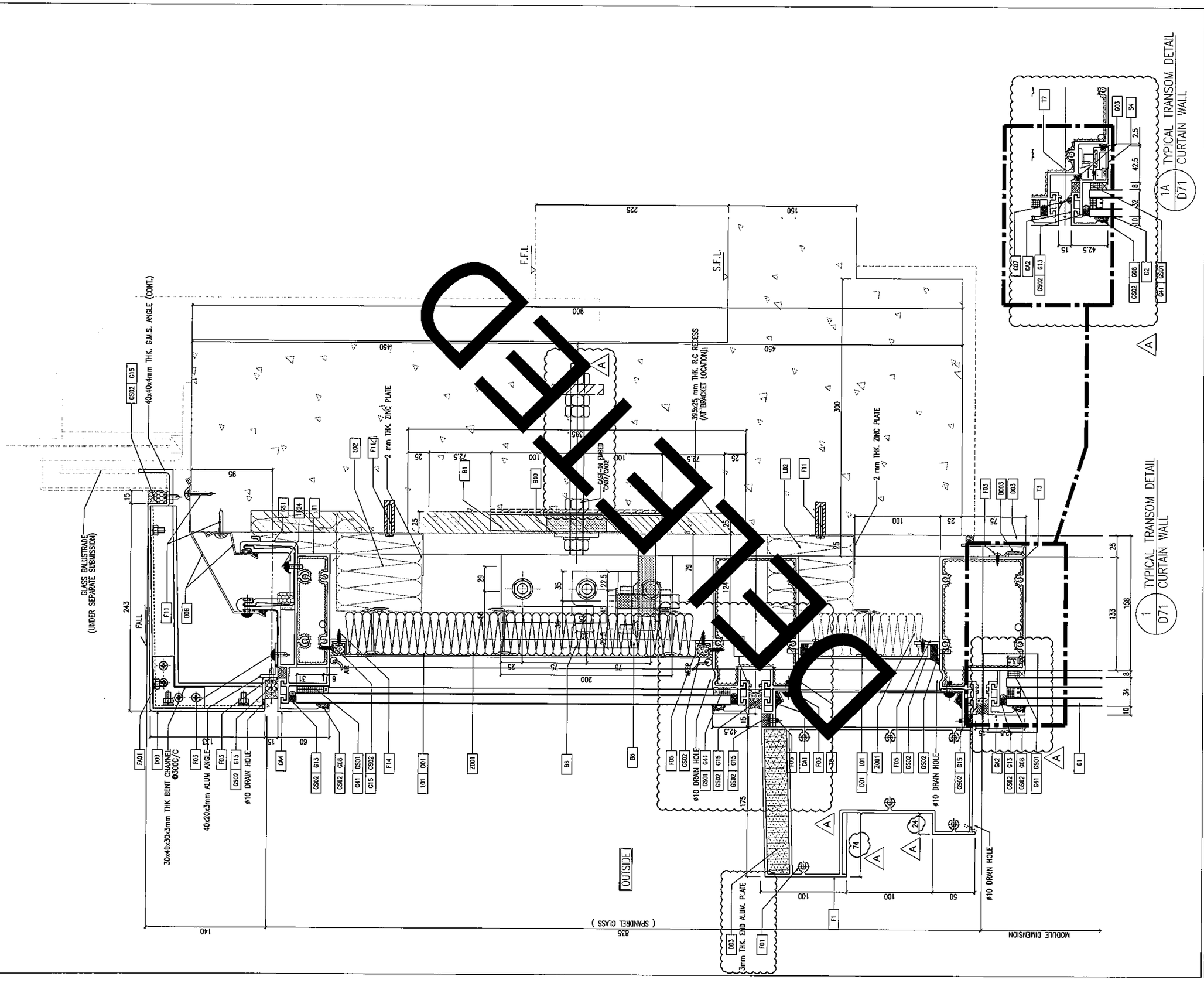

FOR TENDER

B.D. REF :

CLIENT :
信和置業有限公司
Sino Land Company Limited

ARCHITECT :
ronald lu & partners
Architects . Planners . Interior Designers
Ronald Lu & Partners (HK) Ltd.
呂元祥建築師事務所(香港)有限公司

MAIN CONTRACTOR :
Gammon

STRUCTURAL ENGINEER :
AECOM

FACADE CONSULTANT:
AECOM

NOTE :
1. ALL DIMENSIONS ARE IN mm.
2. ALL ELEVATIONS ARE VIEWED FROM OUTSIDE.
3. ALL DIMENSIONS TO BE VERIFIED ON SITE BEFORE FABRICATION.

LEGEND :
X1 — DETAIL MARK NO.
X001 — REFER SHEET NO.

1. F.F.L. --FINISHED FLOOR LEVEL
2. S.F.L. --STRUCTURAL FLOOR LEVEL
3. /R --REVERSED DETAIL

NO.	DATE	REVISED	BY
A	25/01/22	REVISED AS PER COMMENTS	LS

JOB NO. : J-858

PROJECT :
PROPOSED RESIDENTIAL DEVELOPMENT
AT TKOTL 70RP, PHASE 11, LOHAS PARK
TSEUNG KWAN O, N.T.

TITLE :
TYPICAL MULLION DETAIL
FOR CURTAIN WALL

DATE : 22-OCT-21 | SCALE : 1:2(A1)

DRAWN BY : | CHECKED BY :

美特鋁質有限公司
MIDI ALUMINIUM FABRICATOR LTD.
Units 6-8, Sunray Industrial Centre, 1/F
610 Cha Kwo Ling Road, Kowloon
Tel:23489211-4 Fax:(852)27727666

DWG NO. : J858-CW-D71 | REV. : A

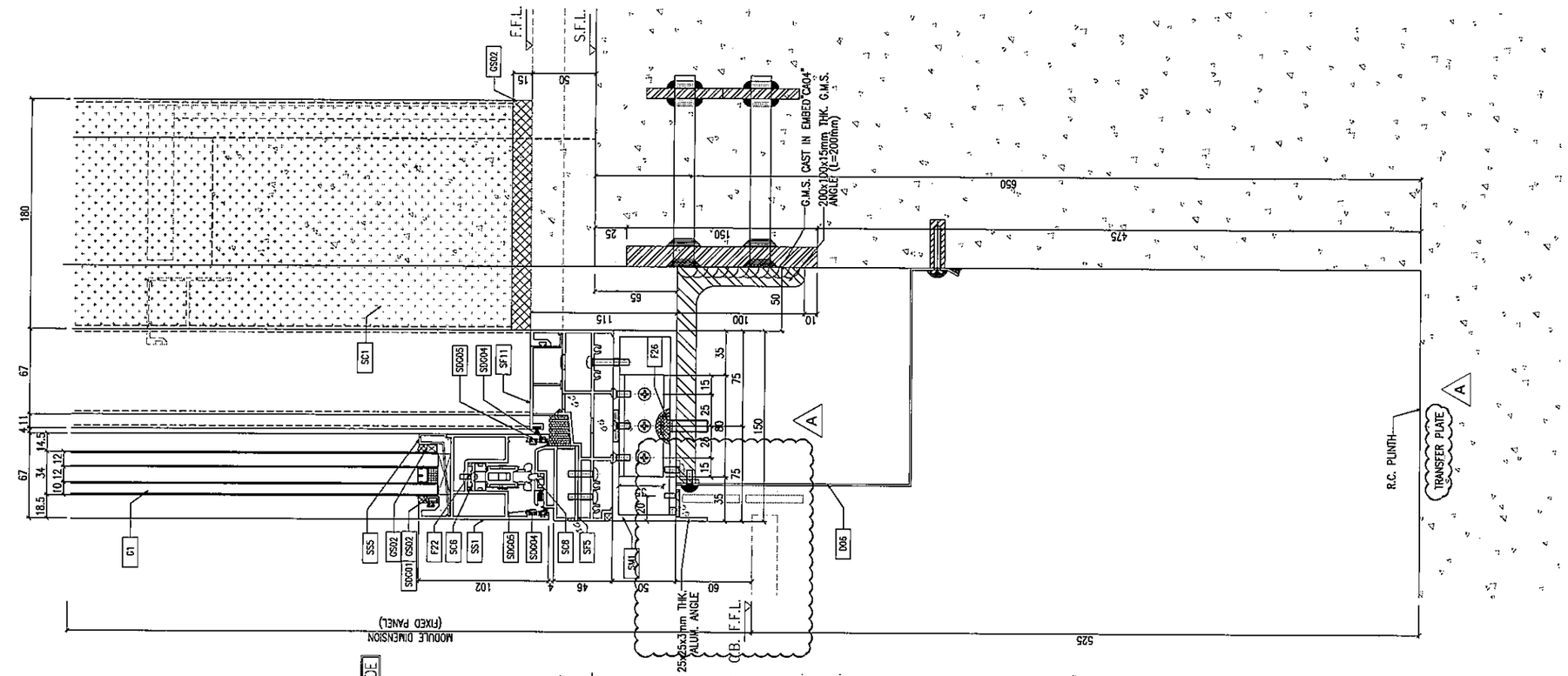

2 / D72 TYPICAL TRANSOM DETAIL SLIDING DOOR

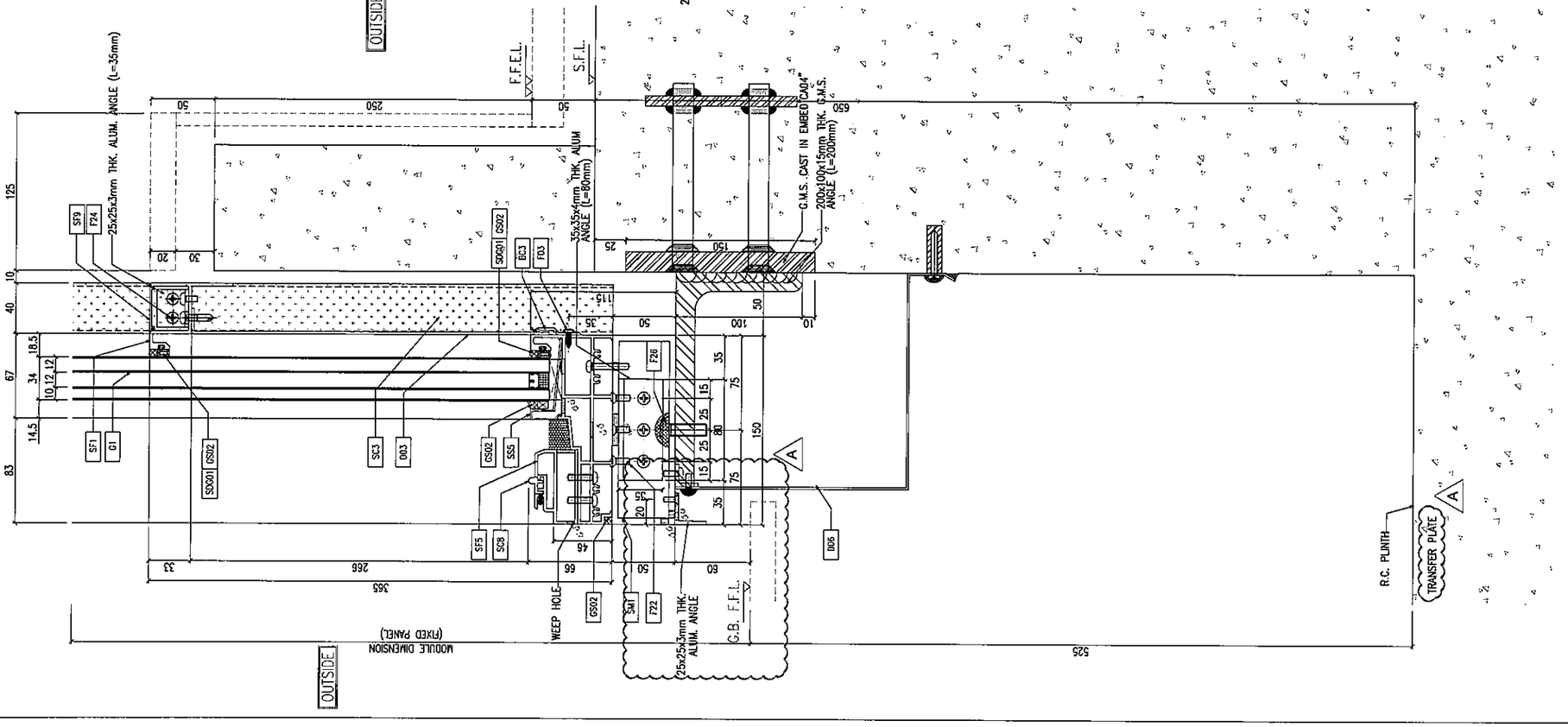

1 / D72 TYPICAL TRANSOM DETAIL SLIDING DOOR

B.D. REF :

CLIENT :
信和置業有限公司
Sino Land Company Limited

ARCHITECT :
ronald lu & partners
Architects . Planners . Interior Designers
Ronald Lu & Partners (HK) Ltd.
呂元祥建築師事務所(香港)有限公司

MAIN CONTRACTOR :
Gammon

STRUCTURAL ENGINEER :
AECOM

FACADE CONSULTANT:
AECOM

NOTE :
1. ALL DIMENSIONS ARE IN mm.
2. ALL ELEVATIONS ARE VIEWED FROM OUTSIDE.
3. ALL DIMENSIONS TO BE VERIFIED ON SITE BEFORE FABRICATION.

LEGEND :
- X1 / X001 — DETAIL MARK NO. / REFER SHEET NO.
1. F.F.L. --FINISHED FLOOR LEVEL
2. S.F.L. --STRUCTURAL FLOOR LEVEL
3. /R --REVERSED DETAIL

NO.	DATE	REVISED	BY
A	25/05/22	REVISED AS PER COMMENTS	LS

JOB NO. : J-858

PROJECT :
PROPOSED RESIDENTIAL DEVELOPMENT
AT TKOTL 70RP, PHASE 11, LOHAS PARK
TSEUNG KWAN O, N.T.

TITLE :
TYPICAL MULLION DETAIL
FOR CURTAIN WALL

DATE : 22-OCT-21 | SCALE : 1:2(A1)

DRAWN BY : | CHECKED BY :

美特鋁質有限公司
MIDI ALUMINIUM FABRICATOR LTD.
Units 6-8, Sunray Industrial Centre, 1/F
610 Cha Kwo Ling Road, Kowloon
Tel:23489211-4 Fax:(852)27727666

DWG NO. : J858-CW-D72 | REV. : A

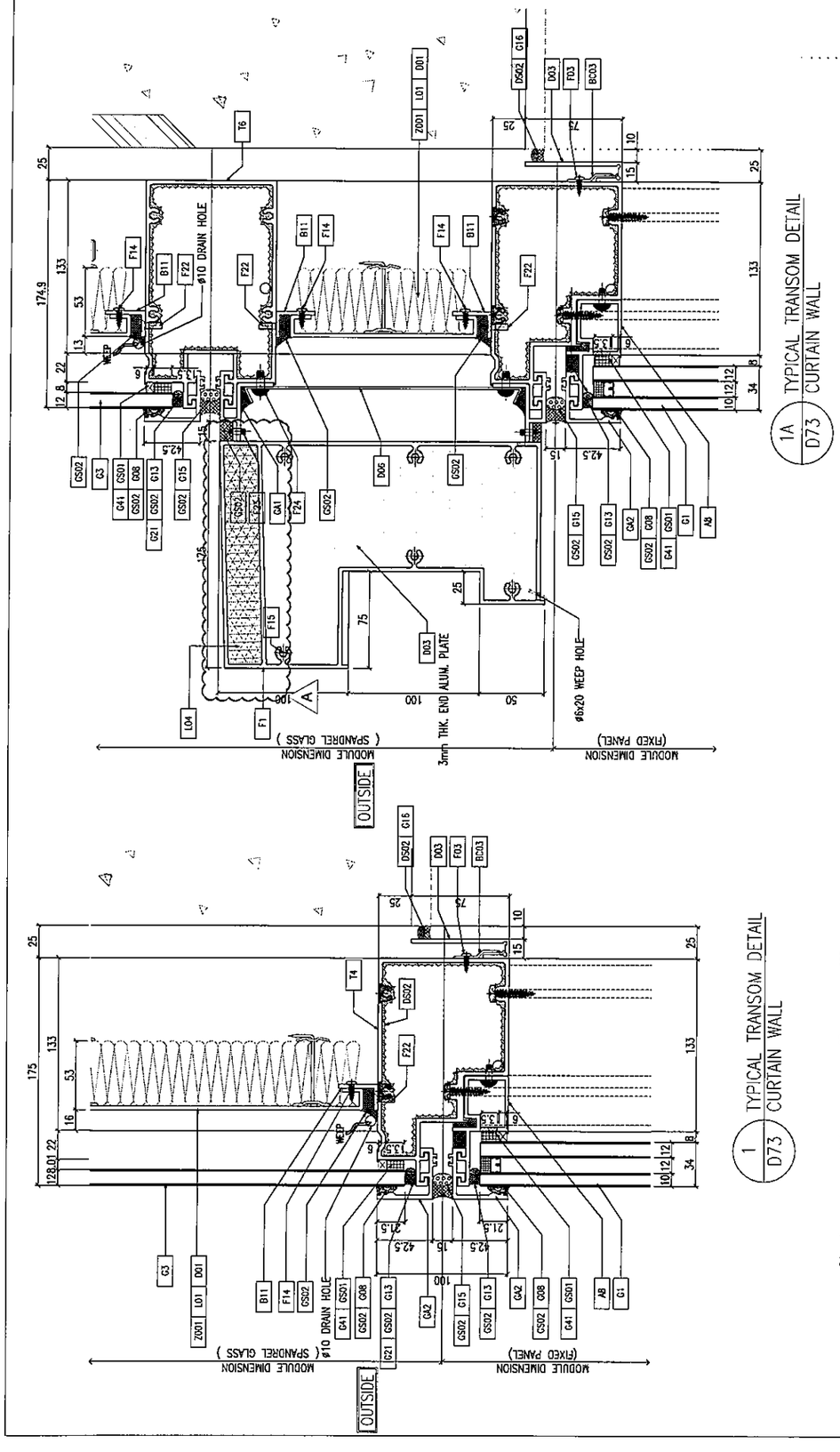

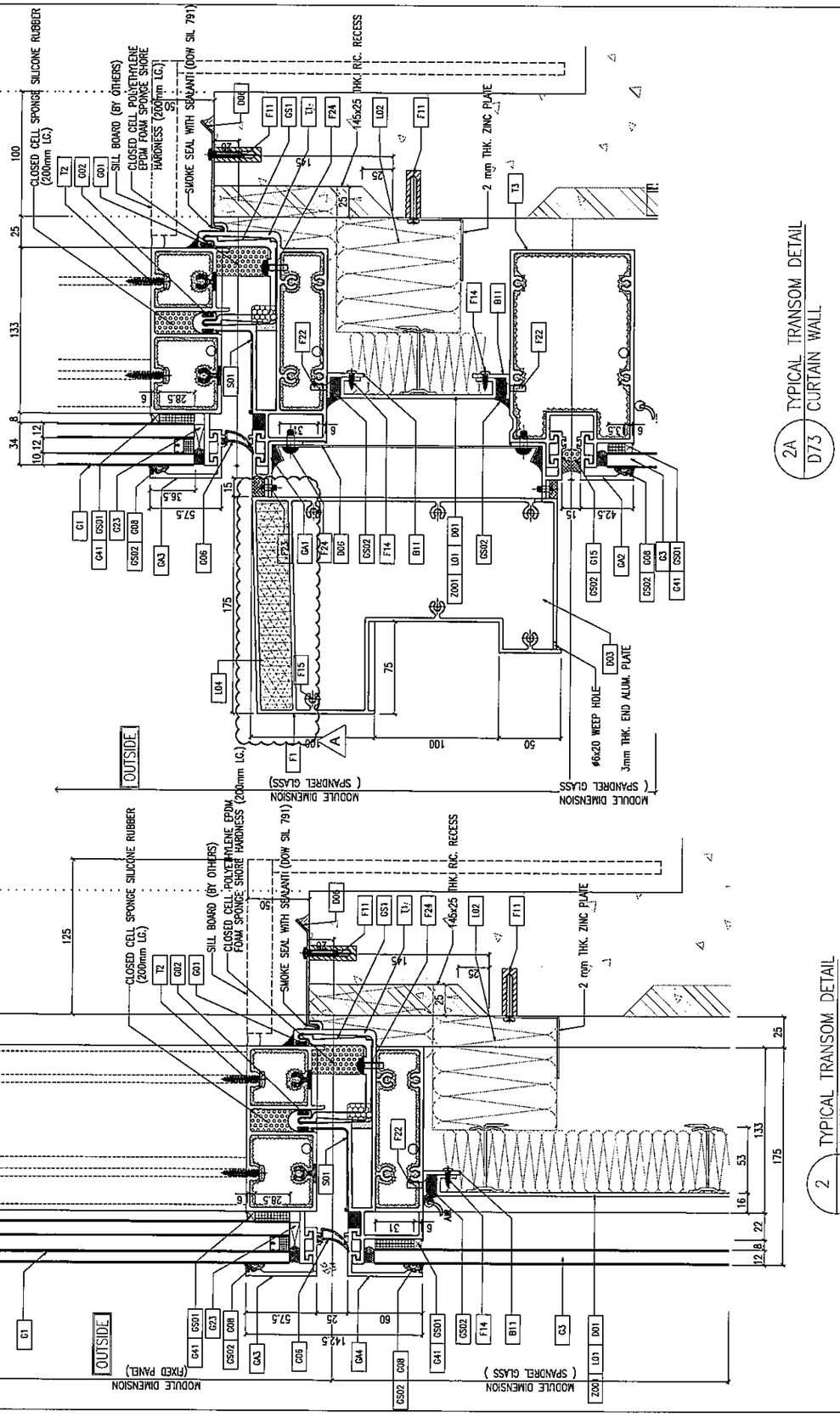

B.D. REF :

CLIENT :
信和置業有限公司
Sino Land Company Limited

ARCHITECT :
ronald lu & partners
Architects . Planners . Interior Designers
Ronald Lu & Partners (HK) Ltd.
呂元祥建築師事務所(香港)有限公司

MAIN CONTRACTOR :
Gammon

STRUCTURAL ENGINEER :
AECOM

FACADE CONSULTANT:
AECOM

NOTE :
1. ALL DIMENSIONS ARE IN mm.
2. ALL ELEVATIONS ARE VIEWED FROM OUTSIDE.
3. ALL DIMENSIONS TO BE VERIFIED ON SITE BEFORE FABRICATION.

LEGEND :
X1 / X001 — DETAIL MARK NO. / REFER SHEET NO.
1. F.F.L. --FINISHED FLOOR LEVEL
2. S.F.L. --STRUCTURAL FLOOR LEVEL
3. /R --REVERSED DETAIL

NO.	DATE	REVISED	BY
A	25/05/22	REVISED AS PER COMMENTS	LS

JOB NO. : J-858

PROJECT :
PROPOSED RESIDENTIAL DEVELOPMENT
AT TKOTL 70RP, PHASE 11, LOHAS PARK
TSEUNG KWAN O, N.T.

TITLE :
TYPICAL MULLION DETAIL
FOR CURTAIN WALL

DATE : 22-OCT-21 | SCALE : 1:2(A1)

DRAWN BY : | CHECKED BY :

美特鋁質有限公司
MIDI ALUMINIUM FABRICATOR LTD.
Units 6-8, Sunray Industrial Centre, 1/F
610 Cha Kwo Ling Road, Kowloon
Tel:23489211-4 Fax:(852)27727666

DWG NO. : J858-CW-D73 | REV. : A

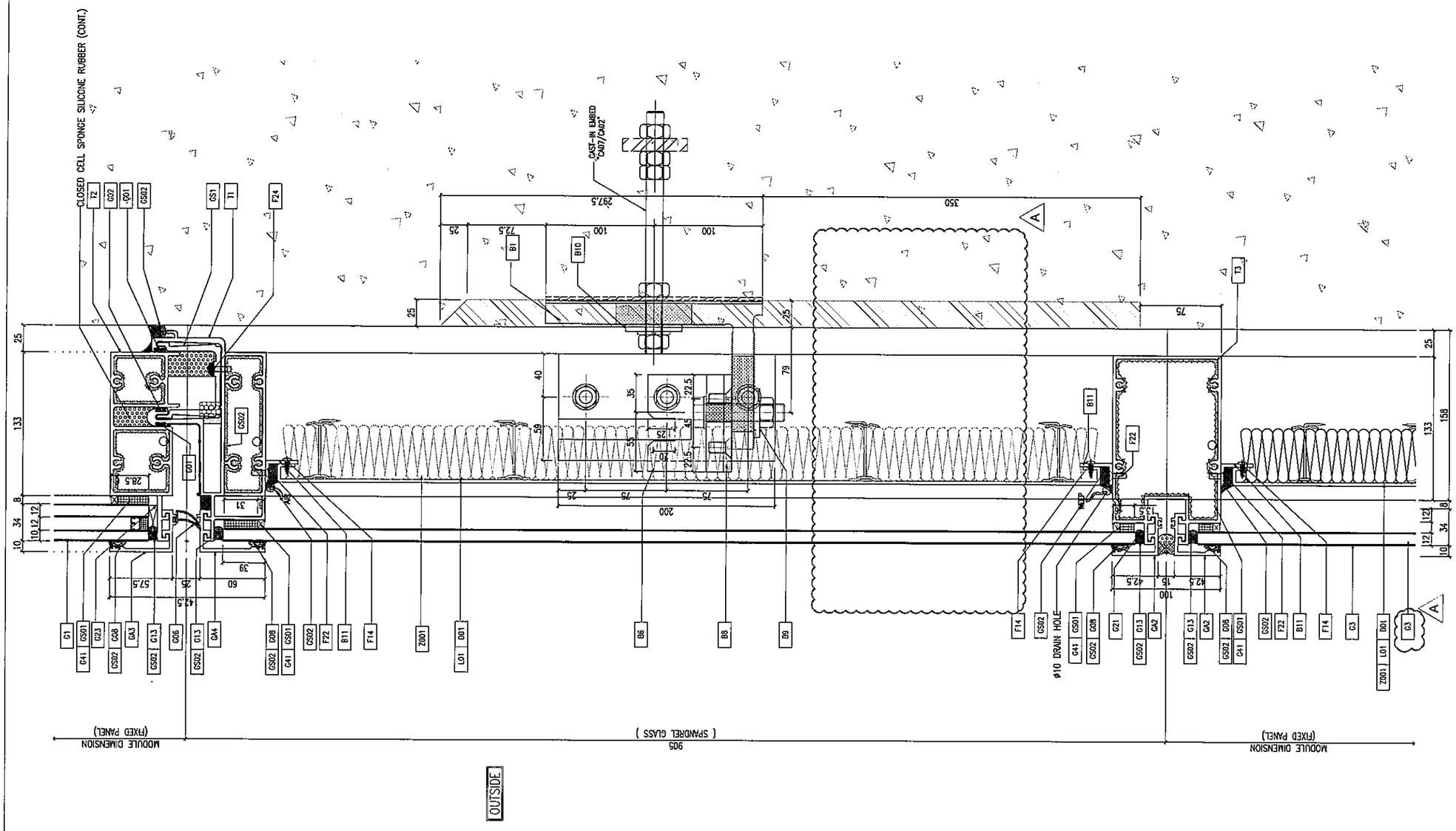

1 / D74 TYPICAL TRANSOM DETAIL CURTAIN WALL

B.D. REF :

CLIENT :
信和置業有限公司
Sino Land Company Limited

ARCHITECT :
ronald lu & partners
Architects . Planners . Interior Designers
Ronald Lu & Partners (HK) Ltd.
呂元祥建築師事務所(香港)有限公司

MAIN CONTRACTOR :
Gammon

STRUCTURAL ENGINEER :
AECOM

FACADE CONSULTANT:
AECOM

NOTE :
1. ALL DIMENSIONS ARE IN mm.
2. ALL ELEVATIONS ARE VIEWED FROM OUTSIDE.
3. ALL DIMENSIONS TO BE VERIFIED ON SITE BEFORE FABRICATION.

LEGEND :
- X1 / X001 — DETAIL MARK NO. / REFER SHEET NO.
1. F.F.L. --FINISHED FLOOR LEVEL
2. S.F.L. --STRUCTURAL FLOOR LEVEL
3. /R --REVERSED DETAIL

NO.	DATE	REVISED	BY
A	25/05/22	REVISED AS PER COMMENTS	LS

JOB NO. : J-858

PROJECT :
PROPOSED RESIDENTIAL DEVELOPMENT
AT TKOTL 70RP, PHASE 11, LOHAS PARK
TSEUNG KWAN O, N.T.

TITLE :
TYPICAL MULLION DETAIL
FOR CURTAIN WALL

DATE : 22-OCT-21 | SCALE : 1:2(A1)

DRAWN BY : | CHECKED BY :

美特鋁質有限公司
MIDI ALUMINUM FABRICATOR LTD.
Units 6-8, Sunray Industrial Centre, 1/F
610 Cha Kwo Ling Road, Kowloon
Tel:23489211-4 Fax:(852)27727666

DWG NO. : J858-CW-D74 | REV. : A

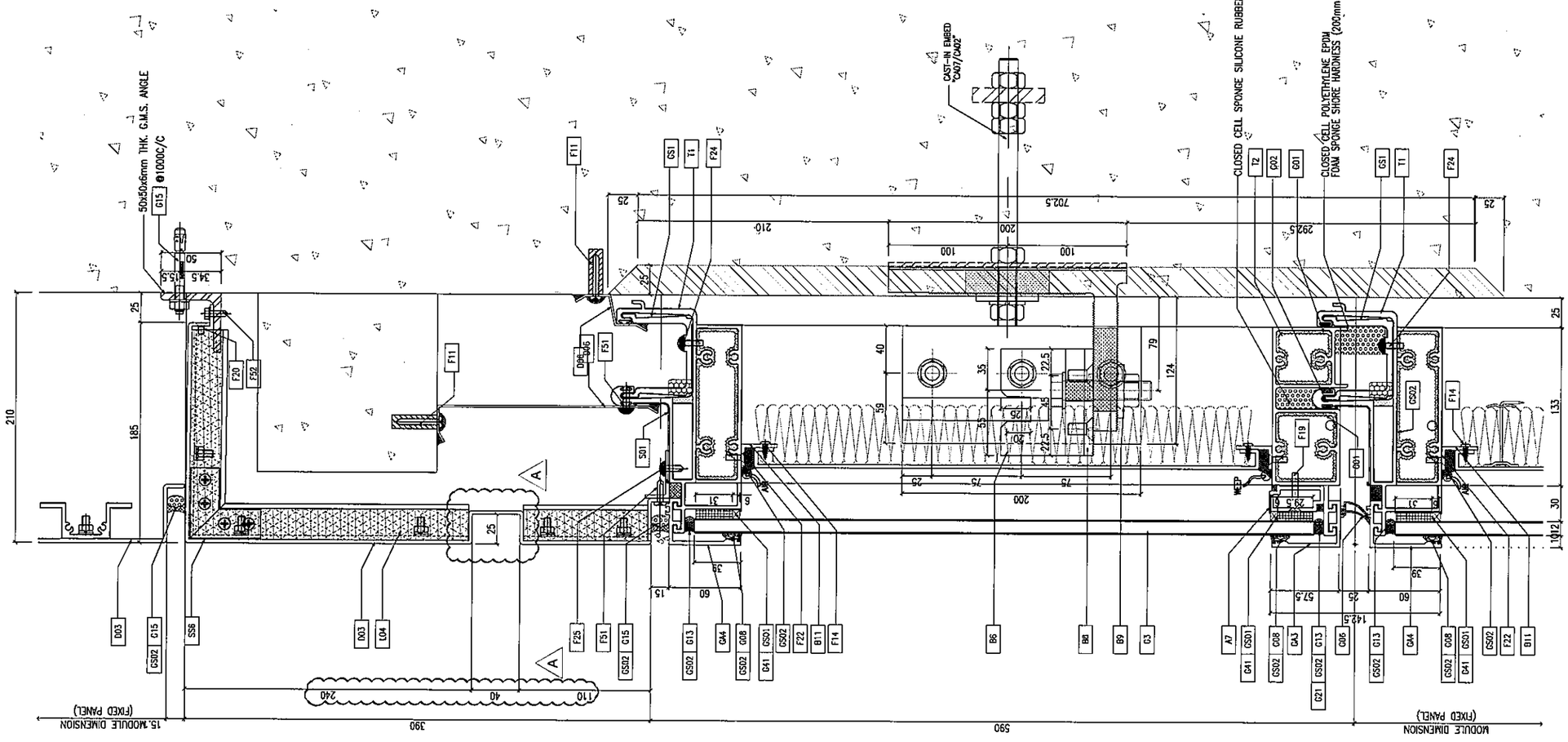

1 / D75 TYPICAL TRANSOM DETAIL CURTAIN WALL

B.D. REF :

CLIENT :
信和置業有限公司
Sino Land Company Limited

ARCHITECT :
ronald lu & partners
Architects . Planners . Interior Designers
Ronald Lu & Partners (HK) Ltd.
呂元祥建築師事務所(香港)有限公司

MAIN CONTRACTOR :
Gammon

STRUCTURAL ENGINEER :
AECOM

FACADE CONSULTANT:
AECOM

NOTE :
1. ALL DIMENSIONS ARE IN mm.
2. ALL ELEVATIONS ARE VIEWED FROM OUTSIDE.
3. ALL DIMENSIONS TO BE VERIFIED ON SITE BEFORE FABRICATION.

LEGEND :
K1 — DETAIL MARK NO.
X001 — REFER SHEET NO.
1. F.F.L. --FINISHED FLOOR LEVEL
2. S.F.L. --STRUCTURAL FLOOR LEVEL
3. /R --REVERSED DETAIL

NO.	DATE	REVISED	BY
A	25/05/22	REVISED AS PER COMMENTS	LS

JOB NO. : J-858

PROJECT :
PROPOSED RESIDENTIAL DEVELOPMENT
AT TKOTL 70RP, PHASE 11, LOHAS PARK
TSEUNG KWAN O, N.T.

TITLE :
TYPICAL MULLION DETAIL
FOR CURTAIN WALL

DATE : 22-OCT-21 | SCALE : 1:2(A1)

DRAWN BY : | CHECKED BY :

美特鋁質有限公司
MIDI ALUMINUM FABRICATOR LTD.
Units 6-8, Sunray Industrial Centre, 1/F
610 Cha Kwo Ling Road, Kowloon
Tel:23489211-4 Fax:(852)27727666

DWG NO. : J858-CW-D75 | REV. : A

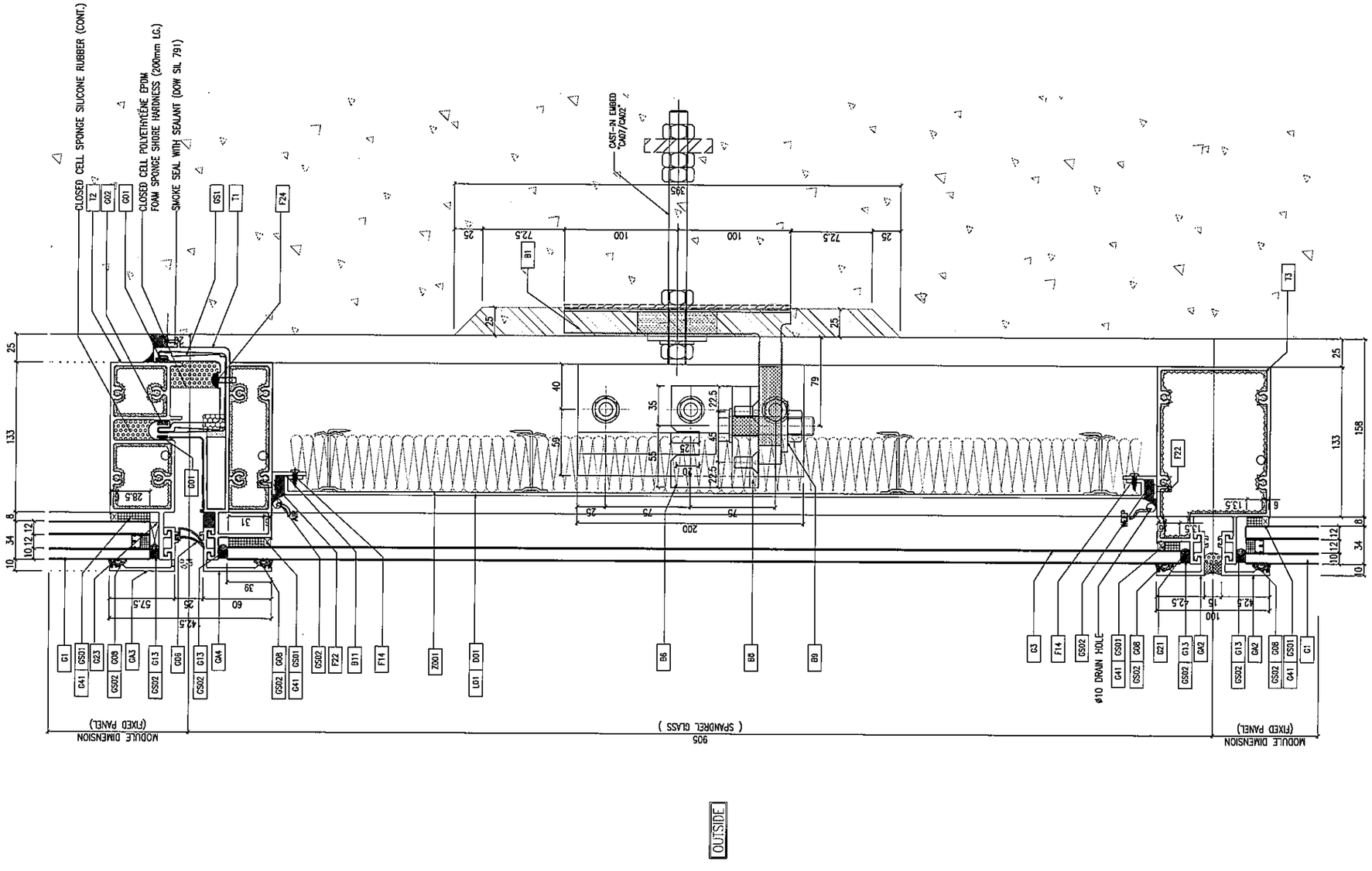

1 TYPICAL TRANSOM DETAIL
1 TYPICAL MULLION DETAIL
D76 CURTAIN WALL

B.D. REF :

CLIENT :
信和置業有限公司
Sino Land Company Limited

ARCHITECT :
ronald lu & partners
Architects . Planners . Interior Designers
Ronald Lu & Partners (HK) Ltd.
呂元祥建築師事務所(香港)有限公司

MAIN CONTRACTOR :
Gammon

STRUCTURAL ENGINEER :
AECOM

FACADE CONSULTANT:
AECOM

NOTE :
1. ALL DIMENSIONS ARE IN mm.
2. ALL ELEVATIONS ARE VIEWED FROM OUTSIDE.
3. ALL DIMENSIONS TO BE VERIFIED ON SITE BEFORE FABRICATION.

LEGEND :
X1 — DETAIL MARK NO.
X001 — REFER SHEET NO.
1. F.F.L. --FINISHED FLOOR LEVEL
2. S.F.L. --STRUCTURAL FLOOR LEVEL
3. /R --REVERSED DETAIL

NO.	DATE	REVISED	BY

JOB NO. : J-858

PROJECT :
PROPOSED RESIDENTIAL DEVELOPMENT
AT TKOTL 70RP, PHASE 11, LOHAS PARK
TSEUNG KWAN O, N.T.

TITLE :
TYPICAL MULLION DETAIL
FOR CURTAIN WALL

DATE : 22-OCT-21	SCALE : 1:2(A1)
DRAWN BY :	CHECKED BY :

美特鋁質有限公司
MIDI ALUMINIUM FABRICATOR LTD.
Units 6-8, Sunray Industrial Centre, 1/F
610 Cha Kwo Ling Road, Kowloon
Tel:23489211-4 Fax:(852)27727666

DWG NO. : J858-CW-D76 REV. : -

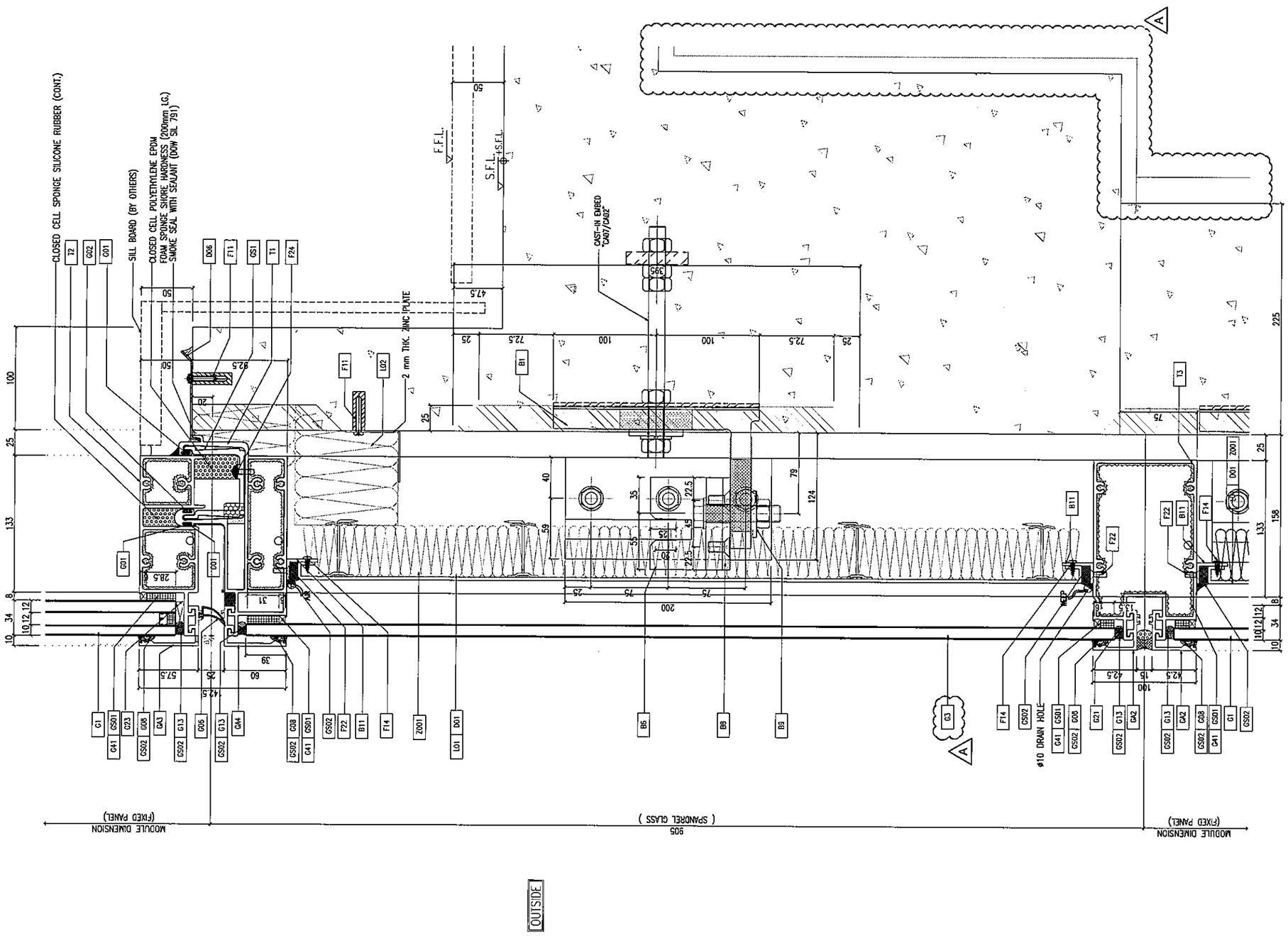

1 / D77 TYPICAL TRANSOM DETAIL CURTAIN WALL

B.D. REF :

CLIENT :
信和置業有限公司
Sino Land Company Limited

ARCHITECT :
ronald lu & partners
Architects . Planners . Interior Designers
Ronald Lu & Partners (HK) Ltd.
呂元祥建築師事務所(香港)有限公司

MAIN CONTRACTOR :
Gammon

STRUCTURAL ENGINEER :
AECOM

FACADE CONSULTANT:
AECOM

NOTE :
1. ALL DIMENSIONS ARE IN mm.
2. ALL ELEVATIONS ARE VIEWED FROM OUTSIDE.
3. ALL DIMENSIONS TO BE VERIFIED ON SITE BEFORE FABRICATION.

LEGEND :
- X1 / XD01 — DETAIL MARK NO. / REFER SHEET NO.
1. F.F.L. -- FINISHED FLOOR LEVEL
2. S.F.L. -- STRUCTURAL FLOOR LEVEL
3. (R) -- REVERSED DETAIL

NO.	DATE	REVISED	BY
A	23/12/21	REVISED AS PER COMMENTS	LS

JOB NO. : J-858

PROJECT :
PROPOSED RESIDENTIAL DEVELOPMENT
AT TKOTL 70RP, PHASE 11, LOHAS PARK
TSEUNG KWAN O, N.T.

TITLE :
TYPICAL MULLION DETAIL
FOR CURTAIN WALL

DATE : 22-OCT-21 | SCALE : 1:2(A1)

DRAWN BY : | CHECKED BY :

美特鋁質有限公司
MIDI ALUMINIUM FABRICATOR LTD.
Units 6-8, Sunray Industrial Centre, 1/F
610 Cha Kwo Ling Road, Kowloon
Tel:23489211-4 Fax:(852)27727666

DWG NO. : J858-CW-D77 | REV. : A

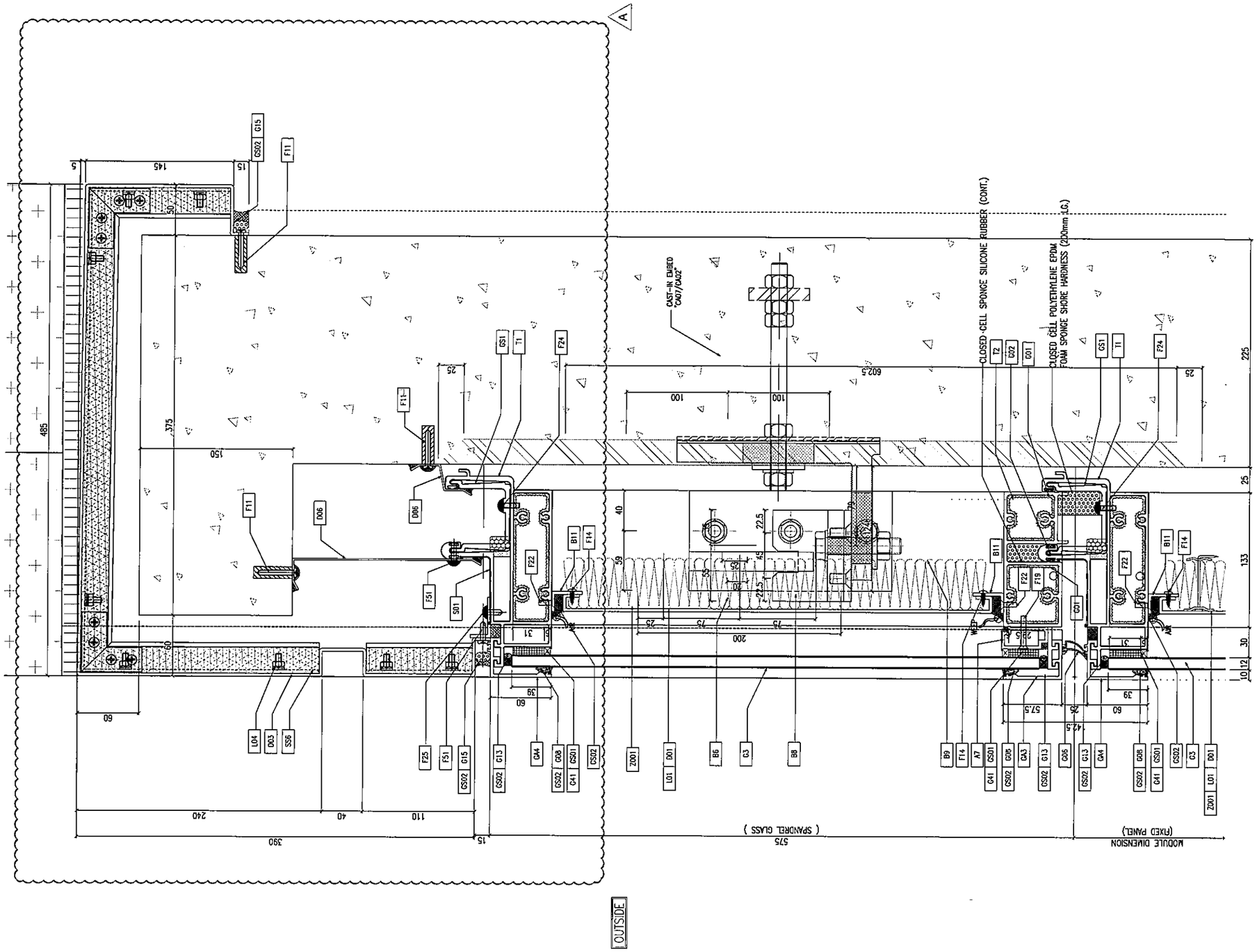

1 / D78 TYPICAL TRANSOM DETAIL CURTAIN WALL

B.D. REF :

CLIENT :
信和置業有限公司
Sino Land Company Limited

ARCHITECT :
ronald lu & partners
Architects . Planners . Interior Designers
Ronald Lu & Partners (HK) Ltd.
呂元祥建築師事務所(香港)有限公司

MAIN CONTRACTOR :
Gammon

STRUCTURAL ENGINEER :
AECOM

FACADE CONSULTANT:
AECOM

NOTE :
1. ALL DIMENSIONS ARE IN mm.
2. ALL ELEVATIONS ARE VIEWED FROM OUTSIDE.
3. ALL DIMENSIONS TO BE VERIFIED ON SITE BEFORE FABRICATION.

LEGEND :
K1 / X001 — DETAIL MARK NO. / REFER SHEET NO.
1. F.F.L. --FINISHED FLOOR LEVEL
2. S.F.L. --STRUCTURAL FLOOR LEVEL
3. /R --REVERSED DETAIL

NO.	DATE	REVISED	BY
A	23/12/21	REVISED AS PER COMMENTS	LS

JOB NO. : J-858

PROJECT :
PROPOSED RESIDENTIAL DEVELOPMENT
AT TKOTL 70RP, PHASE 11, LOHAS PARK
TSEUNG KWAN O, N.T.

TITLE :
TYPICAL MULLION DETAIL
FOR CURTAIN WALL

DATE : 22-OCT-21	SCALE : 1:2(A1)
DRAWN BY :	CHECKED BY :

美特鋁質有限公司
MIDI ALUMINIUM FABRICATOR LTD.
Units 6-8, Sunray Industrial Centre, 1/F
610 Cha Kwo Ling Road, Kowloon
Tel:23489211-4 Fax:(852)27727666

DWG NO. : J858-CW-D78 | REV. : A

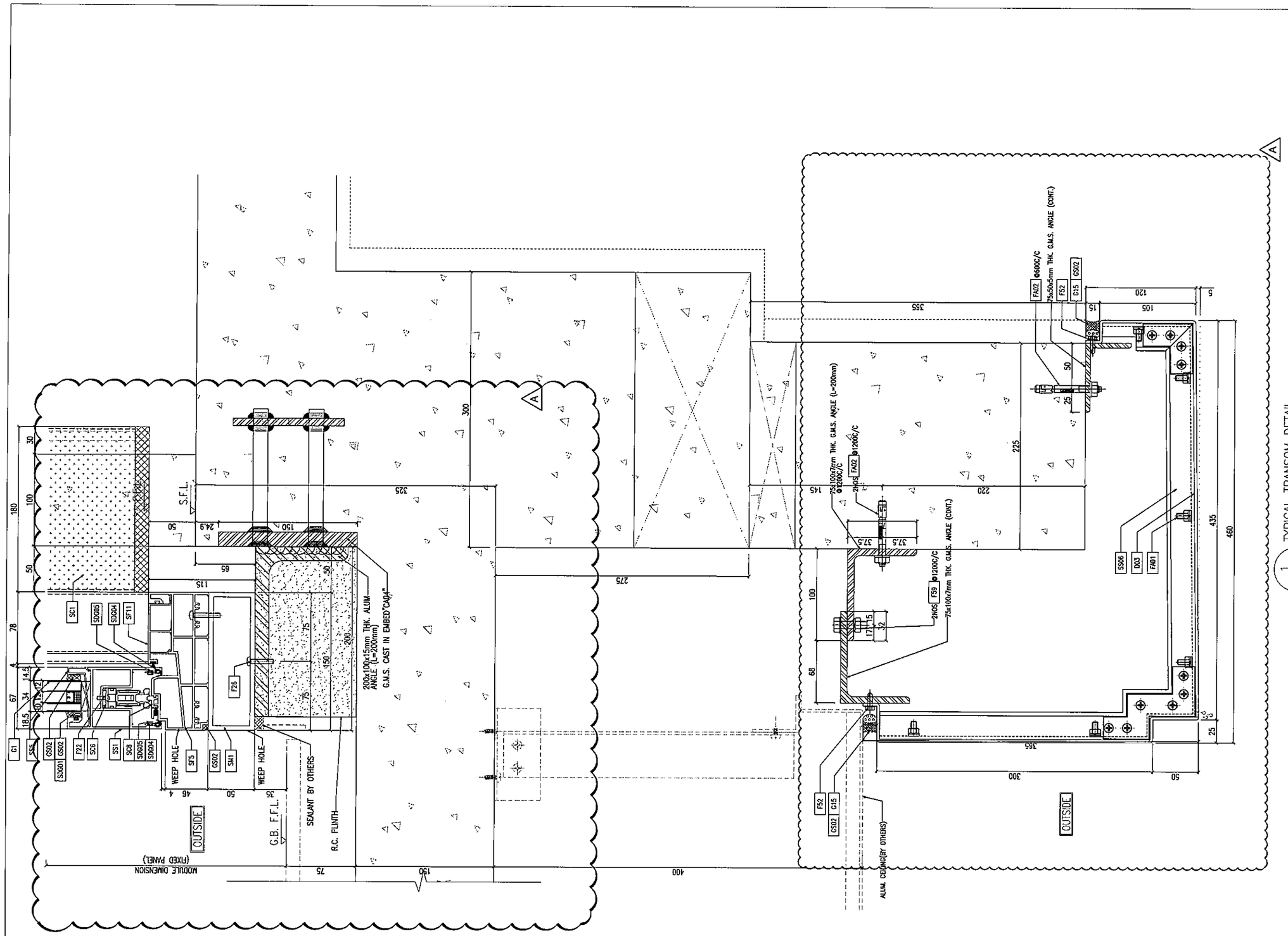

1 TYPICAL TRANSOM DETAIL OF CURTAIN WALL D79

B.D. REF :

CLIENT :
信和置業有限公司
Sino Land Company Limited

ARCHITECT :
ronald lu & partners
Architects . Planners . Interior Designers
Ronald Lu & Partners (HK) Ltd.
呂元祥建築師事務所(香港)有限公司

MAIN CONTRACTOR :
Gammon

STRUCTURAL ENGINEER :
AECOM

FACADE CONSULTANT:
AECOM

NOTE :
1. ALL DIMENSIONS ARE IN mm.
2. ALL ELEVATIONS ARE VIEWED FROM OUTSIDE.
3. ALL DIMENSIONS TO BE VERIFIED ON SITE BEFORE FABRICATION.

LEGEND :
K1 — DETAIL MARK NO.
X001 — REFER SHEET NO.
1. F.F.L. --FINISHED FLOOR LEVEL
2. S.F.L. --STRUCTURAL FLOOR LEVEL
3. /R --REVERSED DETAIL

NO.	DATE	REVISED	BY
A	23/12/21	REVISED AS PER COMMENTS	LS

JOB NO. : J-858

PROJECT :
PROPOSED RESIDENTIAL DEVELOPMENT
AT TKOTL 70RP, PHASE 11, LOHAS PARK
TSEUNG KWAN O, N.T.

TITLE :
TYPICAL MULLION DETAIL
FOR CURTAIN WALL

DATE : 22-OCT-21 | SCALE : 1:2(A1)

DRAWN BY : | CHECKED BY :

美特鋁質有限公司
MIDI ALUMINIUM FABRICATOR LTD.
Units 6-8, Sunray Industrial Centre, 1/F
610 Cha Kwo Ling Road, Kowloon
Tel:23489211-4 Fax:(852)27727666

DWG NO. : J858-CW-D79 | REV. : A

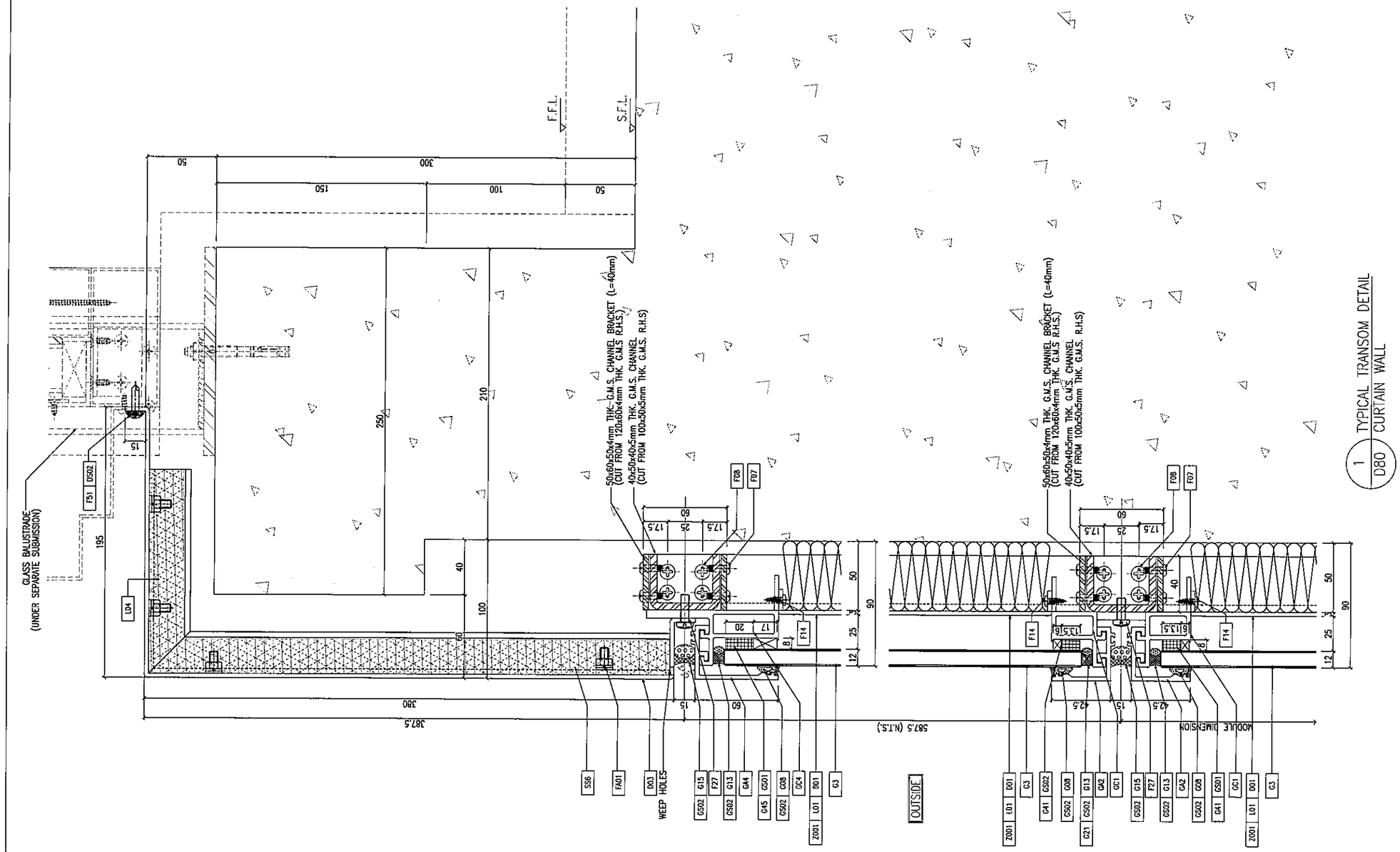

1 D80 TYPICAL TRANSOM DETAIL CURTAIN WALL

B.D. REF :

CLIENT :
信和置業有限公司
Sino Land Company Limited

ARCHITECT :
ronald lu & partners
Architects . Planners . Interior Designers
Ronald Lu & Partners (HK) Ltd.
呂元祥建築師事務所(香港)有限公司

MAIN CONTRACTOR :
Gammon

STRUCTURAL ENGINEER :
AECOM

FACADE CONSULTANT:
AECOM

NOTE :
1. ALL DIMENSIONS ARE IN mm.
2. ALL ELEVATIONS ARE VIEWED FROM OUTSIDE.
3. ALL DIMENSIONS TO BE VERIFIED ON SITE BEFORE FABRICATION.

LEGEND :
X1 / X001 — DETAIL MARK NO. / REFER SHEET NO.
1. F.F.L. --FINISHED FLOOR LEVEL
2. S.F.L. --STRUCTURAL FLOOR LEVEL
3. (/R) --REVERSED DETAIL

NO.	DATE	REVISED	BY

JOB NO. : J-858

PROJECT :
PROPOSED RESIDENTIAL DEVELOPMENT
AT TKOTL 70RP, PHASE 11, LOHAS PARK
TSEUNG KWAN O, N.T.

TITLE :
TYPICAL MULLION DETAIL
FOR CURTAIN WALL

DATE : 22-OCT-21 | SCALE : 1:1.5(A1)

DRAWN BY : | CHECKED BY :

美特鋁質有限公司
MIDI ALUMINIUM FABRICATOR LTD.
Units 6-8, Sunray Industrial Centre, 1/F
610 Cha Kwo Ling Road, Kowloon
Tel:23489211-4 Fax:(852)27727666

DWG NO. : J858-CW-D80 | REV. : -

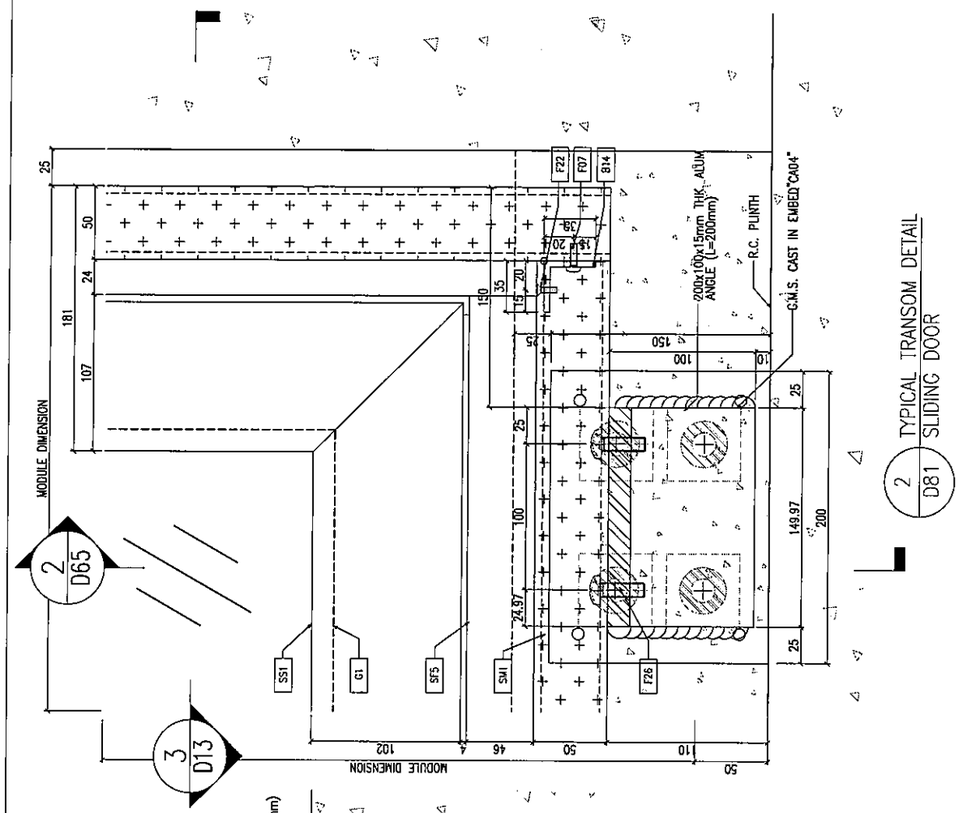

2 D81 TYPICAL TRANSOM DETAIL SLIDING DOOR

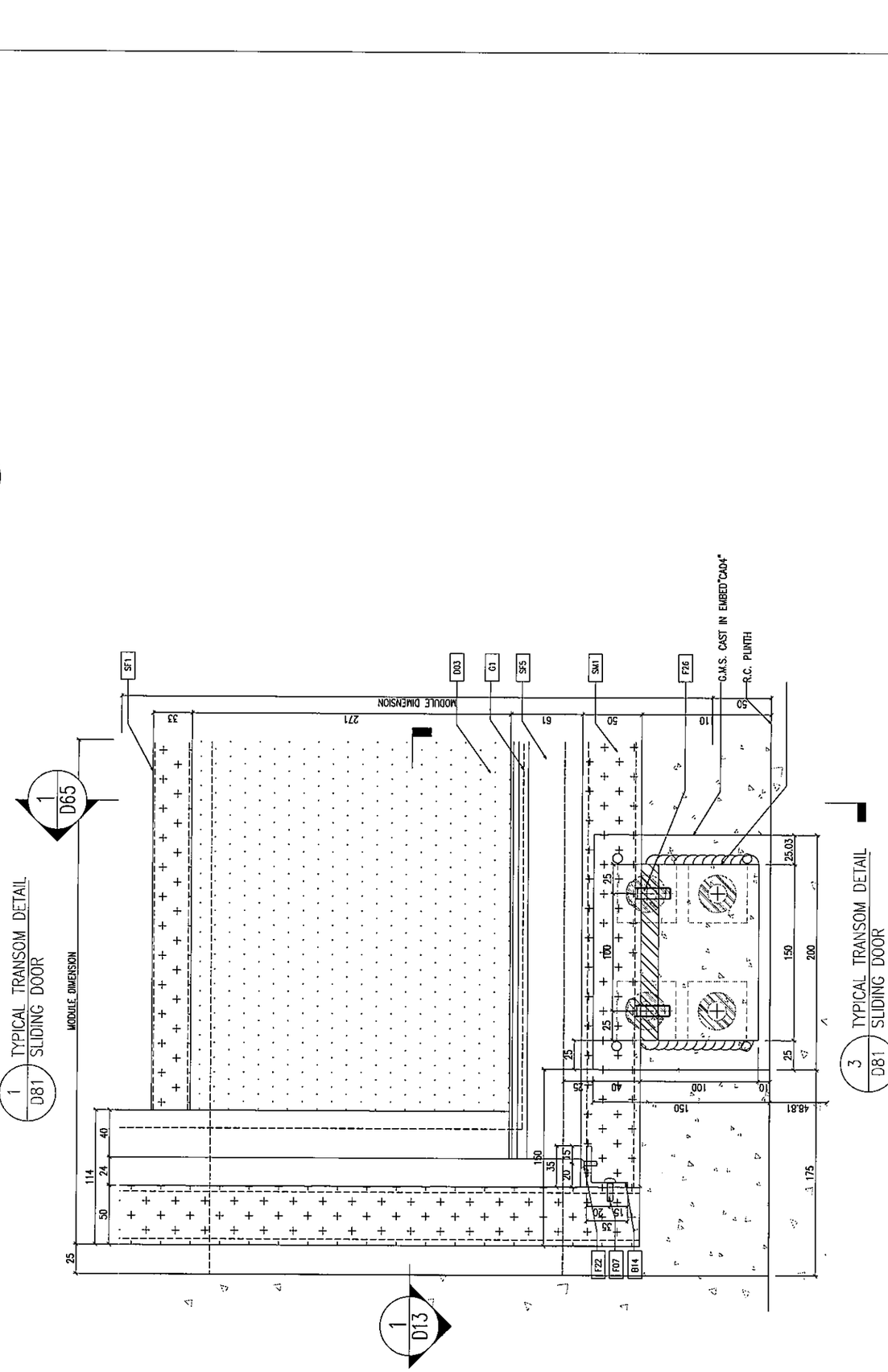

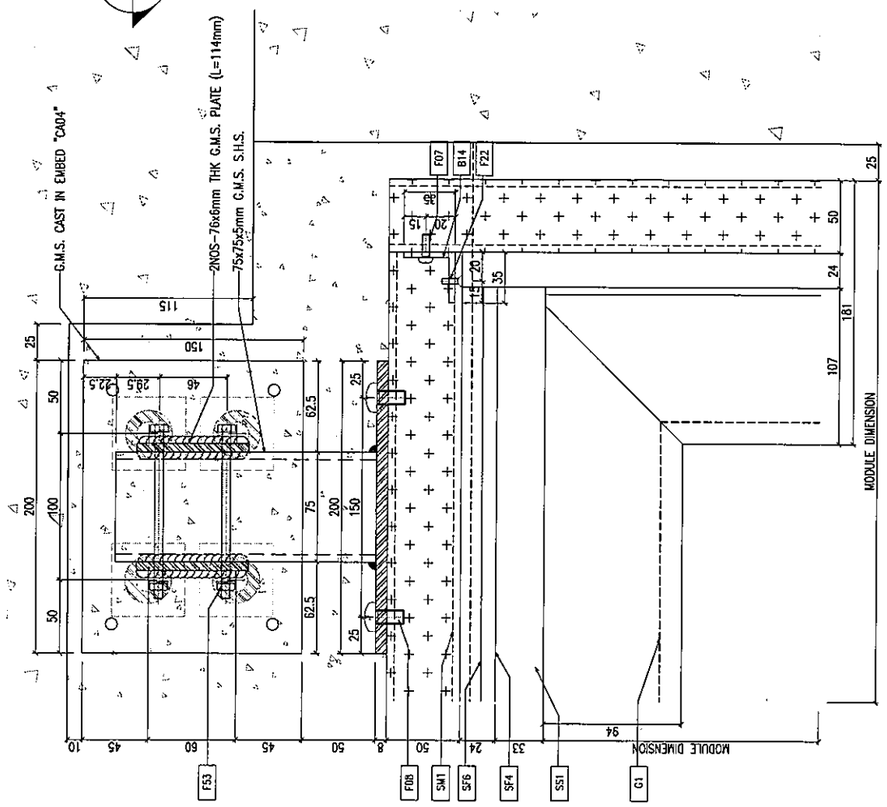

B.D. REF :

CLIENT :
信和置業有限公司
Sino Land Company Limited

ARCHITECT :
ronald lu & partners
Architects . Planners . Interior Designers
Ronald Lu & Partners (HK) Ltd.
呂元祥建築師事務所(香港)有限公司

MAIN CONTRACTOR :
Gammon

STRUCTURAL ENGINEER :
AECOM

FACADE CONSULTANT:
AECOM

NOTE :
1. ALL DIMENSIONS ARE IN mm.
2. ALL ELEVATIONS ARE VIEWED FROM OUTSIDE.
3. ALL DIMENSIONS TO BE VERIFIED ON SITE BEFORE FABRICATION.

LEGEND :
X1 — DETAIL MARK NO.
X001 — REFER SHEET NO.

1. F.F.L. --FINISHED FLOOR LEVEL
2. S.F.L. --STRUCTURAL FLOOR LEVEL
3. (R) --REVERSED DETAIL

NO.	DATE	REVISED	BY

JOB NO. : J-858

PROJECT :
PROPOSED RESIDENTIAL DEVELOPMENT
AT TKOTL 70RP, PHASE 11, LOHAS PARK
TSEUNG KWAN O, N.T.

TITLE :
TYPICAL MULLION DETAIL
FOR CURTAIN WALL

DATE : 22-OCT-21	SCALE : 1:1.5(A1)
DRAWN BY :	CHECKED BY :

美特鋁質有限公司
MIDI ALUMINIUM FABRICATOR LTD.
Units 6-8, Sunray Industrial Centre, 1/F
610 Cha Kwo Ling Road, Kowloon
Tel:23489211-4 Fax:(852)27727666

DWG NO. : J858-CW-D81 | REV. : -