美 特 鋁 質 有 限 公 司
MIDI ALUMINIUM FABRICATOR LTD.

工程指示 / 要求簡箋(E.I.)

工程指示編號：**EI / 0282 / 19** 修改版次：**G**

工程編號 ：**J - 837** 工程名稱 ：觀塘裕民坊

工程項目 ：幕牆 大圖 (第 6 份大圖 rev2)

收件人 ：生統 / 永林 發件人 ： **Eric Liu** 日 期 ：**21/08/2019**

☐要求提供 / ☐確認 事項 ：

( ) 初步鋁料 B.M. ( ) 加工拆圖，然後生產 ( ) 尺寸表

( ) 正式鋁料 B.M. ( ) 技術上資料 / 指示 ( ) 報價

( ) 配件 B.M. ( ) 樣辦或貨品說明書 ( ) 分判合約

( ) 其他 ：_____

內容 ：

因 EI9536 已到 J 版，無法登記，現以此 EI0282 為準

G 版: 提供第 6 份大圖 REV2

請按此提供玻璃 BM，鋁料，配件拆圖

優先提供 6/F 及標準層最後一層拆圖

謝謝！

請在 **2019/ 08 / 24** 前完成上列要求。

附： **206 頁大圖+CAD**

以上項目為:

☐ 原合約工程包 ☐ 原合約工程加 / 減賬 ☐ 新工程報價

原因 :-

分發東莞各部門 ：

( )生產技術總監☐連附件 (✓)技術部 ☐連附件 ( )生產部 ☐連附件 ( )機械設計部☐連附件

( )採購部 ☐連附件 (✓)生產統籌部☐連附件

( )質檢部 ☐連附件 ( )會計部 ☐連附件 ( )報關組 ☐連附件 ( )其他 楊榮輝 ☐連附件

分發香港各部門 ：

( )行政部☐連附件 ( )會計部☐連附件 ( )統籌部☐連附件 ( )工程部地盤科文 ☐連附件

( )採購部☐連附件 ( )QS 部 ☐連附件 ( )維修部☐連附件 ( )其他 _____☐連附件

傳遞編號： **HK 1856 /19**

發件人簽署：

項目經理簽署：

PROJECT :

URA KWUN TONG TOWN CENTRE
REDEVELOPMENT (AREA 2 & 3) AT NKIL 6514, KWUN TONG, KWLOON

5

TITLE : CURTAIN WALL AT TOWER
SHOPDRAWING SUBMISSION

DATE: 19 - Aug- 2019

美特鋁製有限公司
MIDI ALUMINIUM FABRICATOR LTD.
Units 6-8, Sunray Industrial Centre, 1/F
610 Cha Kwo Ling Road, Kowloon
Tel:23489211-4 Fax:(852)27727666

DWG NO. : J837-CW-CP01 REV. : E

DRAWING SUBMISSION REGISTER

PROJECT :
URA KWUN TONG TOWN CENTRE
REDEVELOPMENT (AREA 2 & 3) AT
NKIL 6514, KWUN TONG, KWLOON

TITLE :
SHOPDRAWING FOR
CURTAIN WALL AT TOWER

| DRAWING TITLE | DWG. NO. | DATE OF ISSUE / REVISIONS | | |

DRAWING SUBMISSION REGISTER

PROJECT :
URA KWUN TONG TOWN CENTRE
REDEVELOPMENT (AREA 2 & 3) AT
NKIL 6514, KWUN TONG, KWLOON

TITLE :
SHOPDRAWING FOR
CURTAIN WALL AT TOWER

DATE OF ISSUE											
ISSUE	01	02	03	04	05	06					
DAY	23	10	24	22	28	20					
MONTH	07	09	11	12	01	05					
YEAR	18	18	18	18	19	19					

SUBMISSION STATE (FOR B.D / A.S.D)
AP - APPROVED
AC - APPROVED SUB. TO CONDITION
NA - NOT APPROVED

SUBMISSION STATE (FOR CLIENT / CONSULTANT)
AP - APPROVED
AC - APPROVED SUB. TO CONDITION
NA - NOT APPROVED

SUBMISSION STATE (FOR ARCHITECT)
AP - APPROVED
AC - APPROVED SUB. TO CONDITION
NA - NOT APPROVED

FABRICATION / CONSTRUCTION STATE
ISSUE TO CHINA OFFICE
ISSUE TO SITE
ISSUE TO SUB-CONTRACTOR

DRAWING TITLE	DWG. NO.	REVISIONS										COMMENT DATE	REV.	STATE	COMMENT DATE	REV.	STATE	COMMENT DATE	REV.	STATE	REV.	DATE	REV.	DATE	REV.	DATE
CAST IN CHANNEL & EMBED TYPICAL DETAILS OF CURTAIN WALL	J837-CW-ED05	-	A	B	C	D	D																			
CAST IN CHANNEL & EMBED TYPICAL DETAILS OF CURTAIN WALL	J837-CW-ED06		-	A	B	C	C																			
CAST IN CHANNEL & EMBED TYPICAL DETAILS OF CURTAIN WALL	J837-CW-ED07		-	A	B	B	B																			
CAST IN CHANNEL & EMBED TYPICAL DETAILS OF CURTAIN WALL	J837-CW-ED08		-	A	A	A	B																			
CAST IN CHANNEL & EMBED TYPICAL DETAILS OF CURTAIN WALL	J837-CW-ED09		-	A	A	A	B																			
CAST IN CHANNEL & EMBED TYPICAL DETAILS OF CURTAIN WALL	J837-CW-ED10		-	A	A	A	B																			
CAST IN CHANNEL & EMBED TYPICAL DETAILS OF CURTAIN WALL	J837-CW-ED11		A	A	A	A	A																			
CAST IN CHANNEL & EMBED TYPICAL DETAILS OF CURTAIN WALL	J837-CW-ED12		-	-	A	A	C																			
CAST IN CHANNEL & EMBED TYPICAL DETAILS OF CURTAIN WALL	J837-CW-ED13					-	-																			
CAST IN CHANNEL & EMBED TYPICAL DETAILS OF CURTAIN WALL	J837-CW-ED14					-	-																			
CAST IN CHANNEL & EMBED TYPICAL DETAILS OF CURTAIN WALL	J837-CW-ED15					-	A																			
CAST IN CHANNEL & EMBED TYPICAL DETAILS OF CURTAIN WALL	J837-CW-ED16					-	A																			
CAST IN CHANNEL & EMBED TYPICAL DETAILS OF CURTAIN WALL	J837-CW-ED17						-																			
CAST IN CHANNEL & EMBED TYPICAL DETAILS OF CURTAIN WALL	J837-CW-ED18						-																			
CAST IN CHANNEL & EMBED TYPICAL DETAILS OF CURTAIN WALL	J837-CW-ED19						-																			
CAST IN CHANNEL & EMBED TYPICAL DETAILS OF CURTAIN WALL	J837-CW-ED20						-																			
CAST IN CHANNEL & EMBED TYPICAL DETAILS OF CURTAIN WALL	J837-CW-ED21						-																			
PART ELEVATION OF CURTAIN WALL AT TOWER 1	J837-CW-2101	-	A	B	C	E	F																			
PART ELEVATION OF CURTAIN WALL AT TOWER 1	J837-CW-2102	-	A	B	C	E	G																			
PART ELEVATION OF CURTAIN WALL AT TOWER 1	J837-CW-2103	-	A	B	C	E	H																			
PART ELEVATION OF CURTAIN WALL AT TOWER 1	J837-CW-2104	-	A	B	C	E	G																			
PART ELEVATION OF CURTAIN WALL AT TOWER 1	J837-CW-2105	-	A	B	C	E	G																			
PART ELEVATION OF CURTAIN WALL AT TOWER 1	J837-CW-2106	-	A	B	C	E	H																			
PART ELEVATION OF CURTAIN WALL AT TOWER 1	J837-CW-2107	-	A	B	C	E	G																			
PART ELEVATION OF CURTAIN WALL AT TOWER 1	J837-CW-2108	-	A	B	B	E	F																			
PART ELEVATION OF CURTAIN WALL AT TOWER 1	J837-CW-2109	-	A	B	C	E	H																			
PART ELEVATION OF CURTAIN WALL AT TOWER 1	J837-CW-2110	-	A	B	C	E	G																			
PART ELEVATION OF CURTAIN WALL AT TOWER 1	J837-CW-2111	-	A	B	C	E	G																			
PART ELEVATION OF CURTAIN WALL AT TOWER 1	J837-CW-2112	-	A	B	C	E	G																			
PART ELEVATION OF CURTAIN WALL AT TOWER 1	J837-CW-2113	-	A	B	C	E	G																			
PART ELEVATION OF CURTAIN WALL AT TOWER 1	J837-CW-2114					-	B																			
PART ELEVATION OF CURTAIN WALL AT TOWER 2	J837-CW-2201	-	A	B	C	E	H																			
PART ELEVATION OF CURTAIN WALL AT TOWER 2	J837-CW-2202	-	A	B	C	E	G																			
PART ELEVATION OF CURTAIN WALL AT TOWER 2	J837-CW-2203	-	A	B	C	E	G																			
PART ELEVATION OF CURTAIN WALL AT TOWER 2	J837-CW-2204	-	A	B	C	E	G																			
PART ELEVATION OF CURTAIN WALL AT TOWER 2	J837-CW-2205	-	A	B	C	E	G																			
PART ELEVATION OF CURTAIN WALL AT TOWER 2	J837-CW-2206	-	A	B	C	E	G																			
PART ELEVATION OF CURTAIN WALL AT TOWER 2	J837-CW-2207	-	A	B	C	E	F																			
PART ELEVATION OF CURTAIN WALL AT TOWER 2	J837-CW-2208	-	A	B	C	E	G																			
PART ELEVATION OF CURTAIN WALL AT TOWER 2	J837-CW-2209	-	A	B	C	E	F																			
PART ELEVATION OF CURTAIN WALL AT TOWER 2	J837-CW-2210	-	A	B	C	E	F																			
PART ELEVATION OF CURTAIN WALL AT TOWER 2	J837-CW-2211	-	A	B	C	E	G																			
PART ELEVATION OF CURTAIN WALL AT TOWER 2	J837-CW-2212	-	A	B	C	E	G																			
PART ELEVATION OF CURTAIN WALL AT TOWER 2	J837-CW-2213	-	A	B	C	E	F																			
TOTAL PAGES : (INCLUDING COVERPAGE AND DRAWING SUBMISSION REGISTER)							44																			

IN-HOUSE DESIGN CHECKER

美特鋁質有限公司
MIDI ALUMINIUM FABRICATOR LTD.
Units 6-8, Sunray Industrial Centre, 1/F
610 Cha Kwo Ling Road, Kowloon
Tel:23489211-4 Fax:(852)27727666

DWG NO. : J837-CW-DR02 | REV. : E

DRAWING SUBMISSION REGISTER

PROJECT :
URA KWUN TONG TOWN CENTRE
REDEVELOPMENT (AREA 2 & 3) AT
NKIL 6514, KWUN TONG, KWLOON

TITLE :
SHOPDRAWING FOR
CURTAIN WALL AT TOWER

DRAWING TITLE	DWG. NO.	REVISIONS	DATE OF ISSUE	SUBMISSION STATE (FOR B.D / A.S.D)	SUBMISSION STATE (FOR CLIENT / CONSULTANT)	SUBMISSION STATE (FOR ARCHITECT)	FABRICATION / CONSTRUCTION STATE
			ISSUE 01 02 03 04 05 06	AP - APPROVED	AP - APPROVED	AP - APPROVED	ISSUE TO CHINA OFFICE
			DAY 23 10 24 22 28 20	AC - APPROVED SUB. TO CONDITION	AC - APPROVED SUB. TO CONDITION	AC - APPROVED SUB. TO CONDITION	ISSUE TO SITE
			MONTH 07 09 11 12 01 05	NA - NOT APPROVED	NA - NOT APPROVED	NA - NOT APPROVED	ISSUE TO SUB-CONTRACTOR
			YEAR 18 18 18 18 19 19	COMMENT DATE / REV. / STATE	COMMENT DATE / REV. / STATE	COMMENT DATE / REV. / STATE	REV. / DATE / REV. / DATE / REV. / DATE
PART ELEVATION OF CURTAIN WALL AT TOWER 2	J837-CW-2214	- C					
PART ELEVATION OF CURTAIN WALL AT TOWER 3	J837-CW-2301	- A B C E H					
PART ELEVATION OF CURTAIN WALL AT TOWER 3	J837-CW-2302	- A B C E F					
PART ELEVATION OF CURTAIN WALL AT TOWER 3	J837-CW-2303	- A B C E F					
PART ELEVATION OF CURTAIN WALL AT TOWER 3	J837-CW-2304	- A B C E G					
PART ELEVATION OF CURTAIN WALL AT TOWER 3	J837-CW-2305	- A B C E H					
PART ELEVATION OF CURTAIN WALL AT TOWER 3	J837-CW-2306	- A B C E H					
PART ELEVATION OF CURTAIN WALL AT TOWER 3	J837-CW-2307	- A B C E G					
PART ELEVATION OF CURTAIN WALL AT TOWER 3	J837-CW-2308	- A B C E F					
PART ELEVATION OF CURTAIN WALL AT TOWER 3	J837-CW-2309	-- A B C E F					
PART ELEVATION OF CURTAIN WALL AT TOWER 3	J837-CW-2310	- A B C E F					
PART ELEVATION OF CURTAIN WALL AT TOWER 3	J837-CW-2311	- A B C E H					
PART ELEVATION OF CURTAIN WALL AT TOWER 3	J837-CW-2312	- A B C E F					
PART ELEVATION OF CURTAIN WALL AT TOWER 3	J837-CW-2313	--					
PART ELEVATION OF CURTAIN WALL AT TOWER 5	J837-CW-2501	- A B C E F					
PART ELEVATION OF CURTAIN WALL AT TOWER 5	J837-CW-2502	- A B C E F					
PART ELEVATION OF CURTAIN WALL AT TOWER 5	J837-CW-2503	-- A B C E F					
PART ELEVATION OF CURTAIN WALL AT TOWER 5	J837-CW-2504	- A B C E F					
PART ELEVATION OF CURTAIN WALL AT TOWER 5	J837-CW-2505	- A B C E F					
PART ELEVATION OF CURTAIN WALL AT TOWER 5	J837-CW-2506	- A B C E F					
PART ELEVATION OF CURTAIN WALL AT TOWER 5	J837-CW-2507	- A B C E F					
PART ELEVATION OF CURTAIN WALL AT TOWER 5	J837-CW-2508	- A B C E G					
PART ELEVATION OF CURTAIN WALL AT TOWER 5	J837-CW-2509	- A B C E G					
PART ELEVATION OF CURTAIN WALL AT TOWER 5	J837-CW-2510	- A B C E F					
PART ELEVATION OF CURTAIN WALL AT TOWER 5	J837-CW-2511	- A B C E G					
PART ELEVATION OF CURTAIN WALL AT TOWER 5	J837-CW-2512	- A B C E G					
PART ELEVATION OF CURTAIN WALL AT TOWER 5	J837-CW-2513	-- - C					
6TH FLOOR FULL LAYOUT PLAN AT TOWER 1	J837-CW-3101	- A D E G J					
TYPICAL FLOOR FULL LAYOUT PLAN AT TOWER 1	J837-CW-3102	-- A C D F G					
50TH FLOOR FULL LAYOUT PLAN AT TOWER 1	J837-CW-3103	- B C G I					
ROOF FLOOR FULL LAYOUT PLAN AT TOWER 1	J837-CW-3104	- - - B C					
6TH FLOOR FULL LAYOUT PLAN AT TOWER 2	J837-CW-3201	- A D E F H					
TYPICAL FLOOR FULL LAYOUT PLAN AT TOWER 2	J837-CW-3202	- A C D E E					
55TH FLOOR FULL LAYOUT PLAN AT TOWER 2	J837-CW-3203	- A B D F					
ROOF FLOOR FULL LAYOUT PLAN AT TOWER 2	J837-CW-3204	- -- A B C					
6TH FLOOR FULL LAYOUT PLAN AT TOWER 3	J837-CW-3301	-- A C C D F					
TYPICAL FLOOR FULL LAYOUT PLAN AT TOWER 3	J837-CW-3302	- A C C C C					
52ND FLOOR FULL LAYOUT PLAN AT TOWER 3	J837-CW-3303	- B C C F					
ROOF FLOOR FULL LAYOUT PLAN AT TOWER 3	J837-CW-3304	- -- - - A					
6TH FLOOR FULL LAYOUT PLAN AT TOWER 5	J837-CW-3501	-- A E F G I					
TYPICAL FLOOR FULL LAYOUT PLAN(7F~21F) AT TOWER 5	J837-CW-3502	- A D E F F					
TYPICAL FLOOR FULL LAYOUT PLAN(22~50F) AT TOWER 5	J837-CW-3503	- C D E E					
51ST FLOOR FULL LAYOUT PLAN AT TOWER 5	J837-CW-3504	- -- A A D					
ROOF FLOOR FULL LAYOUT PLAN AT TOWER 5	J837-CW-3505	- - A A B					
TOTAL PAGES : (INCLUDING COVERPAGE AND DRAWING SUBMISSION REGISTER)		44					

IN-HOUSE DESIGN CHECKER

美特鋁質有限公司
MIDI ALUMINIUM FABRICATOR LTD.
Units 6-8, Sunray Industrial Centre, 1/F
610 Cha Kwo Ling Road, Kowloon
Tel:23489211-4 Fax:(852)27727666

DWG NO. : J837-CW-DR03 | REV. : E

DRAWING SUBMISSION REGISTER

PROJECT :
URA KWUN TONG TOWN CENTRE
REDEVELOPMENT (AREA 2 & 3) AT
NKIL 6514, KWUN TONG, KWLOON

TITLE :
SHOPDRAWING FOR
CURTAIN WALL AT TOWER

DRAWING TITLE	DWG. NO.	REVISIONS	DATE OF ISSUE	SUBMISSION STATE (FOR B.D / A.S.D)			SUBMISSION STATE (FOR CLIENT / CONSULTANT)			SUBMISSION STATE (FOR ARCHITECT)			FABRICATION / CONSTRUCTION STATE					
			ISSUE 01 02 03 04 05 06 DAY 23 10 24 22 28 20 MONTH 07 09 11 12 01 05 YEAR 18 18 18 18 19 19	AP - APPROVED AC - APPROVED SUB. TO CONDITION NA - NOT APPROVED			AP - APPROVED AC - APPROVED SUB. TO CONDITION NA - NOT APPROVED			AP - APPROVED AC - APPROVED SUB. TO CONDITION NA - NOT APPROVED			ISSUE TO CHINA OFFICE		ISSUE TO SITE		ISSUE TO SUB-CONTRACTOR	
				COMMENT DATE	REV.	STATE	COMMENT DATE	REV.	STATE	COMMENT DATE	REV.	STATE	REV.	DATE	REV.	DATE	REV.	DATE
TYPICAL MULLION DETAIL FOR CURTAIN WALL AT TOWER	J837-CW-5001	– A B B B B																
TYPICAL MULLION DETAIL FOR CURTAIN WALL AT TOWER	J837-CW-5002	– A B C C D																
TYPICAL MULLION DETAIL FOR CURTAIN WALL AT TOWER	J837-CW-5003	– A B B B C																
TYPICAL MULLION DETAIL FOR CURTAIN WALL AT TOWER	J837-CW-5004	– A B C E E																
TYPICAL MULLION DETAIL FOR CURTAIN WALL AT TOWER	J837-CW-5005	– A B C D F																
TYPICAL MULLION DETAIL FOR CURTAIN WALL AT TOWER	J837-CW-5006	– A B C E E																
TYPICAL MULLION DETAIL FOR CURTAIN WALL AT TOWER	J837-CW-5007	– – – – –																
TYPICAL MULLION DETAIL FOR CURTAIN WALL AT TOWER	J837-CW-5008	– – – – –																
TYPICAL MULLION DETAIL FOR CURTAIN WALL AT TOWER	J837-CW-5009	– A A B B																
TYPICAL MULLION DETAIL FOR CURTAIN WALL AT TOWER	J837-CW-5010	– A B B B																
TYPICAL MULLION DETAIL FOR CURTAIN WALL AT TOWER	J837-CW-5011	– A A B B																
TYPICAL MULLION DETAIL FOR CURTAIN WALL AT TOWER	J837-CW-5012	A B B C																
TYPICAL MULLION DETAIL FOR CURTAIN WALL AT TOWER	J837-CW-5013	– A A B																
TYPICAL MULLION DETAIL FOR CURTAIN WALL AT TOWER	J837-CW-5014	– A A																
TYPICAL MULLION DETAIL FOR CURTAIN WALL AT TOWER	J837-CW-5015	– B																
TYPICAL MULLION DETAIL FOR CURTAIN WALL AT TOWER	J837-CW-5016	– –																
TYPICAL MULLION DETAIL FOR CURTAIN WALL AT TOWER	J837-CW-5017	– –																
REMEDIAL DETAILS FOR CURTAIN WALL AT TOWER	J837-CW-5018	A A																
TYPICAL MULLION DETAIL FOR CURTAIN WALL AT TOWER	J837-CW-5019	– –																
TYPICAL MULLION DETAIL FOR CURTAIN WALL AT TOWER	J837-CW-5020	– –																
TYPICAL MULLION DETAIL FOR CURTAIN WALL AT TOWER	J837-CW-5021	– –																
TYPICAL MULLION DETAIL FOR CURTAIN WALL AT TOWER	J837-CW-5022	– –																
TYPICAL TRANSOM DETAIL FOR CURTAIN WALL AT TOWER	J837-CW-6001	– A B B B B																
TYPICAL TRANSOM DETAIL FOR CURTAIN WALL AT TOWER	J837-CW-6002	– A B C E E																
TYPICAL TRANSOM DETAIL FOR CURTAIN WALL AT TOWER	J837-CW-6003	– A B C D D																
TYPICAL TRANSOM DETAIL FOR CURTAIN WALL AT TOWER	J837-CW-6004	– A B B D D																
TYPICAL TRANSOM DETAIL FOR CURTAIN WALL AT TOWER	J837-CW-6005	– A B B B B																
TYPICAL TRANSOM DETAIL FOR CURTAIN WALL AT TOWER	J837-CW-6006	– A B B D D																
TYPICAL TRANSOM DETAIL FOR CURTAIN WALL AT TOWER	J837-CW-6007	– A B C C C																
TYPICAL TRANSOM DETAIL FOR CURTAIN WALL AT TOWER	J837-CW-6008	– A B B B B																
TYPICAL TRANSOM DETAIL FOR CURTAIN WALL AT TOWER	J837-CW-6009	– A B C D E																
TYPICAL TRANSOM DETAIL FOR CURTAIN WALL AT TOWER	J837-CW-6010	– A B B B B																
TYPICAL TRANSOM DETAIL FOR CURTAIN WALL AT TOWER	J837-CW-6011	– A B C E E																
TYPICAL TRANSOM DETAIL FOR CURTAIN WALL AT TOWER	J837-CW-6012	– A B C E E																
TYPICAL TRANSOM DETAIL FOR CURTAIN WALL AT TOWER	J837-CW-6013	– A B B C D																
TYPICAL TRANSOM DETAIL FOR CURTAIN WALL AT TOWER	J837-CW-6013A	– A A A A																
TYPICAL TRANSOM DETAIL FOR CURTAIN WALL AT TOWER	J837-CW-6014	– A B B B																
TYPICAL TRANSOM DETAIL FOR CURTAIN WALL AT TOWER	J837-CW-6015	– A B B B																
TYPICAL TRANSOM DETAIL FOR CURTAIN WALL AT TOWER	J837-CW-6016	– A A B B																
TYPICAL TRANSOM DETAIL FOR CURTAIN WALL AT TOWER	J837-CW-6017	– A A B B																
TYPICAL TRANSOM DETAIL FOR CURTAIN WALL AT TOWER	J837-CW-6018	– A A B B																
TYPICAL TRANSOM DETAIL FOR CURTAIN WALL AT TOWER	J837-CW-6019	A A B B																
TYPICAL TRANSOM DETAIL FOR CURTAIN WALL AT TOWER	J837-CW-6020	A B D D																
TYPICAL TRANSOM DETAIL FOR CURTAIN WALL AT TOWER	J837-CW-6021	– C C																
TOTAL PAGES : (INCLUDING COVERPAGE AND DRAWING SUBMISSION REGISTER)		44																

IN-HOUSE DESIGN CHECKER

美特鋁質有限公司
MIDI ALUMINIUM FABRICATOR LTD.
Units 6-8, Sunray Industrial Centre, 1/F
610 Cha Kwo Ling Road, Kowloon
Tel:23489211-4 Fax:(852)27727666

DWG NO. : J837-CW-DR04 | REV. : E

DRAWING SUBMISSION REGISTER

PROJECT :
URA KWUN TONG TOWN CENTRE
REDEVELOPMENT (AREA 2 & 3) AT
NKIL 6514, KWUN TONG, KWLOON

TITLE :
SHOPDRAWING FOR
CURTAIN WALL AT TOWER

DATE OF ISSUE										
ISSUE	01	02	03	04	05	06				
DAY	23	10	24	22	28	20				
MONTH	07	09	11	12	01	05				
YEAR	18	18	18	18	19	19				

SUBMISSION STATE (FOR B.D / A.S.D)
AP - APPROVED
AC - APPROVED SUB. TO CONDITION
NA - NOT APPROVED

SUBMISSION STATE (FOR CLIENT / CONSULTANT)
AP - APPROVED
AC - APPROVED SUB. TO CONDITION
NA - NOT APPROVED

SUBMISSION STATE (FOR ARCHITECT)
AP - APPROVED
AC - APPROVED SUB. TO CONDITION
NA - NOT APPROVED

FABRICATION / CONSTRUCTION STATE

DRAWING TITLE	DWG. NO.	REVISIONS	COMMENT DATE	REV.	STATE	COMMENT DATE	REV.	STATE	COMMENT DATE	REV.	STATE	ISSUE TO CHINA OFFICE REV.	ISSUE TO CHINA OFFICE DATE	ISSUE TO SITE REV.	ISSUE TO SITE DATE	ISSUE TO SUB-CONTRACTOR REV.	ISSUE TO SUB-CONTRACTOR DATE
TYPICAL TRANSOM DETAIL FOR CURTAIN WALL AT TOWER	J837-CW-6022	- A A															
TYPICAL TRANSOM DETAIL FOR CURTAIN WALL AT TOWER	J837-CW-6023	- A A															
TYPICAL TRANSOM DETAIL FOR CURTAIN WALL AT TOWER	J837-CW-6024	- - A															
TYPICAL TRANSOM DETAIL FOR CURTAIN WALL AT TOWER	J837-CW-6025	A A															
TYPICAL TRANSOM DETAIL FOR CURTAIN WALL AT TOWER	J837-CW-6026	A A															
TYPICAL TRANSOM DETAIL FOR CURTAIN WALL AT TOWER	J837-CW-6027	- --															
TYPICAL TRANSOM DETAIL FOR CURTAIN WALL AT TOWER	J837-CW-6028	A A															
TYPICAL TRANSOM DETAIL FOR CURTAIN WALL AT TOWER	J837-CW-6029	A B															
TYPICAL TRANSOM DETAIL FOR CURTAIN WALL AT TOWER	J837-CW-6030	- -															
TYPICAL TRANSOM DETAIL FOR CURTAIN WALL AT TOWER	J837-CW-6031	- A															
TYPICAL TRANSOM DETAIL FOR CURTAIN WALL AT TOWER	J837-CW-6032	-- -															
TYPICAL TRANSOM DETAIL FOR CURTAIN WALL AT TOWER	J837-CW-6033	- A															
TYPICAL TRANSOM DETAIL FOR CURTAIN WALL AT TOWER	J837-CW-6034	- -															
TYPICAL TRANSOM DETAIL FOR CURTAIN WALL AT TOWER	J837-CW-6035	- -															
TYPICAL TRANSOM DETAIL FOR CURTAIN WALL AT TOWER	J837-CW-6036	- -															
TYPICAL TRANSOM DETAIL FOR CURTAIN WALL AT TOWER	J837-CW-6037	- -															
TYPICAL TRANSOM DETAIL FOR CURTAIN WALL AT TOWER	J837-CW-6038	-															
TYPICAL TRANSOM DETAIL FOR CURTAIN WALL AT TOWER	J837-CW-6039	-															
TYPICAL TRANSOM DETAIL FOR CURTAIN WALL AT TOWER	J837-CW-6040	-															
TYPICAL TRANSOM DETAIL FOR CURTAIN WALL AT TOWER	J837-CW-6041	-															
TYPICAL TRANSOM DETAIL FOR CURTAIN WALL AT TOWER	J837-CW-6042	-															
TYPICAL TRANSOM DETAIL FOR CURTAIN WALL AT TOWER	J837-CW-6043	-															
TYPICAL TRANSOM DETAIL FOR CURTAIN WALL AT TOWER	J837-CW-6044	--															
TYPICAL TRANSOM DETAIL FOR CURTAIN WALL AT TOWER	J837-CW-6045	-															
TYPICAL TRANSOM DETAIL FOR CURTAIN WALL AT TOWER	J837-CW-6046	-															
TYPICAL TRANSOM DETAIL FOR CURTAIN WALL AT TOWER	J837-CW-6047	-															
TYPICAL TRANSOM DETAIL FOR CURTAIN WALL AT TOWER	J837-CW-6048	-															
TYPICAL TRANSOM DETAIL FOR CURTAIN WALL AT TOWER	J837-CW-6049	-															
TYPICAL TRANSOM DETAIL FOR CURTAIN WALL AT TOWER	J837-CW-6050	-															
TYPICAL TRANSOM DETAIL FOR CURTAIN WALL AT TOWER	J837-CW-6051	-															
TOTAL PAGES : (INCLUDING COVERPAGE AND DRAWING SUBMISSION REGISTER)		30															

IN-HOUSE DESIGN CHECKER

美特鋁質有限公司
MIDI ALUMINIUM FABRICATOR LTD.
Units 6-8, Sunray Industrial Centre, 1/F
610 Cha Kwo Ling Road, Kowloon
Tel:23489211-4 Fax:(852)27727686

DWG NO. : J837-CW-DR05 | REV. : A

GENERAL NOTES FOR CURTAIN WALL

1. DESIGN CODES :
   a) BUILDING (CONSTRUCTION) REGULATIONS , 1990 HONG KONG.
   b) CODE OF PRACTICE FOR THE STRUCTURAL USE OF STEEL , 2011 HONG KONG
   c) CODE OF PRACTICE FOR THE STRUCTURAL USE OF CONCRETE, 2013 HONG KONG
   d) CODE OF PRACTICE ON WIND EFFECTS IN HONG KONG 2004.
   e) BS 8118 – THE STRUCTURAL USE OF ALUMINIUM , PART I – 1991.
   f) BS 6262 –CODE OF PRACTICE FOR GLAZING OF BUILDING – 2005.
   g) BS EN 10088: 2005 STAINLESS STEELS.
   h) ALL RELEVANT CODES AND STANDARDS AS PER PROJECT TECHNICAL SPECIFICATIONS.
   i) CODE OF PRACTICE FOR DEAD AND IMPOSED LOAD 2011

2. DESIGN LOADS :
   a) WIND LOAD :
      HEIGHT ABOVE GROUND LEVEL = 188.42mPD – 8.58mPD = 179.84m
      DESIGN WIND PRESSURE FOR CURTAIN WALL
      BASE WIND LOAD: 3.14 KPa
      DESIGN WIND LOAD (Cp = +1.0/–1.4): 3.14 x (Cp = +1.0) = 3.14 KPa (FOR INWARD)
      3.14 x (Cp = –1.4) = –4.396 KPa (FOR OUTWARD)

   b) IMPOSED LOAD : (FOR RESIDENTIAL FLOOR)
      NONCROWDED LOAD – HORIZONTAL IMPOSED LOAD SHALL BE COMPLIED CODE OF PRACTICE FOR DEAD & IMPOSED LOADS 2011.
      i) LINE LOAD TO BE APPLIED AT A HEIGHT OF 1.1m ABOVE F.F.L. = 0.75 kN/m
      ii) UNIFORMLY DISTRIBUTED LOAD TO BE APPLIED ON THE INFILL BETWEEN FLOOR AND TOP RAIL = 1.0 kPa
      iii) CONCENTRATED LOAD TO BE APPLIED ON ANY PART OF THE INFILL BETWEEN FLOOR AND TOP RAIL = 0.5 kN

   c) DEAD LOAD :
      GLASS WEIGHT: 26 kN/m³
      STEEL WEIGHT: 77 kN/m³
      ALUM. WEIGHT: 27.2 kN/m³

3. GLASS :
   a) FACIAL GLASS FOR CURTAIN WALL USED TO BE :
      i) G1 : IGU 10 mm THK. TEMPERED BLUE TINTED GLASS (OUTER)+ 9 mm AIR SPACE + 8 mm THK. TEMPERED CLEAR GLASS (INNER) (FOR VISION ZONE)
      ii) G2 : IGU 8 mm THK. HEAT STRENGTHENED TINTED GLASS (OUTER)+ 9 mm AIR SPACE + 8 mm THK. HEAT STRENGTHENED CLEAR GLASS (INNER) (FOR VISION ZONE)
      iii) G3 : IGU 10 mm THK. HEAT STRENGTHENED BLUE TINTED GLASS (OUTER)+ 9 mm AIR SPACE + 8 mm THK. TEMPERED CLEAR GLASS (INNER) (FOR VISION ZONE)
      iv) G4 : 8 mm THK. BLUE TINTED HEAT STRENGTHENED GLASS WITH BACK PAN (FOR SPANDREL ZONE)
      v) G5 : IGU 8 mm THK. HEAT STRENGTHENED BLUE TINTED GLASS (OUTER)+ 9 mm AIR SPACE + 8 mm THK. TEMPERED CLEAR GLASS (INNER) (FOR VISION ZONE)
      vi) G6 : 8 mm THK. BLUE TINTED TEMPERED GLASS WITH BACK PAN (FOR SPANDREL ZONE)
      vii) G7 : 8 mm THK. HEAT STRENGTHENED TINTED GLASS (OUTER)+ 1.52PVB + 8 mm THK. HEAT STRENGTHENED CLEAR LAMINATED GLASS (INNER) (FOR VISION ZONE)
      vii) 10mm THK CLEAR TEMPERED GLASS (FOR PROTECTIVE BARIER)

   b) FULL TEMPERED GLASS TO BE 100% HEAT SOAK TESTED IN ACCORDANCE WITH BS EN 14179–1:2005 AND PMAP APP 37.

   c) DESIGN OF GLASS SHALL COMPLY TO B.S. 6262 , 2005. :
      –ALLOWABLE BENDING STRENGTH (TEMPERED) =50 N/mm²
      –ALLOWABLE BENDING STRENGTH (HEAT STRENGTHENED) =25 N/mm²
      –YOUNG'S MODULUS =70,000 N/mm²
      –DENSITY =26 kN/m³

   d) GLASS MATERIALS SHALL COMPLY TO BS 952:1995
   e) ALL GLASS UNDER 1.1m ABOVE F.F.L. SHALL BE COMPLY IMPACT TEST TO BS 6206 CLASS A.
   f) RESIDUAL SURFACE COMPRESSION FOR TEMPERED GLASS TO BE NOT LESS THAN 69 MPa.

4. ALUMINIUM ALLOY :
   a) ALUMINIUM SHEET :
      ALL ALUMINIUM SHEET TO BE ALLOY 3003–H14 TO ALUMINIUM DESIGN MANUAL: BS EN485–2:2008
      0.2% PROOF (YIELD) STRENGTH = 125 MPa
      MINIMUM ULTIMATE TENSILE STRESS = 145 MPa
      MODULUS OF ELASTICITY (E) = 70000 MPa.
   b) ALUMINIUM EXTRUSION : IN ACCORDANCE WITH DESIGN CODE BS: 8118–1:1991, COMPLY TO BS EN 755–2, 2008
      i) ALUMINIUM EXTRUSION – TO BE ALLOY 6063–T5
      0.2% PROOF STRENGTH = 110 MPa
      MINIMUM TENSILE STRENGTH = 130 MPa
      MODULUS OF ELASTICITY = 70000 MPa.
      ii) ALUMINIUM EXTRUSION – TO BE ALLOY 6063–T6
      0.2% PROOF STRENGTH = 160 MPa
      MINIMUM TENSILE STRENGTH = 175 MPa
      MODULUS OF ELASTICITY = 70000 MPa.
      iii) ALUMINIUM EXTRUSION – TO BE ALLOY 6061–T6
      0.2% PROOF STRENGTH = 240 MPa
      MINIMUM TENSILE STRENGTH = 260 MPa
      MODULUS OF ELASTICITY = 70000 MPa.

5. STEEL :
   a) ALL STEEL MEMBERS SHALL MEET THE MINIMUM REQUIREMENTS OF BS EN10025 S275 JO AND CLASS 1 TO C.O.P. FOR THE STRUCTURAL USE OF STEEL 2011.
   b) SURFACE TREATMENT SHALL BE HOT–DIP GALVANIZED COMPLIED WITH BS EN ISO 1461, 2009. (MIN. THICKNESS = 85 MICRONS)

FOR THICKNESS "T" : T≤16mm (GRADE S275)		FOR THICKNESS "T" : 16mm<T≤40mm (GRADE S275)	
YOUNG'S MODULUS	205,000 N/mm²	YOUNG'S MODULUS	205,000 N/mm²
DENSITY	77 kN/m³	DENSITY	77 kN/m³
YIELD STRENGTH	275 N/mm²	YIELD STRENGTH	265 N/mm²
TENSILE STRENGTH	275 N/mm²	TENSILE STRENGTH	265 N/mm²
BENDING STRENGTH	275 N/mm²	BENDING STRENGTH	265 N/mm²
SHEAR STRENGTH	158.8 N/mm²	SHEAR STRENGTH	153 N/mm²

6. WELDING :
   a) ALL WELDS SHALL COMPLY TO BS EN 1011 & BS EN 440 OR EQUIVALENT TO HKSC 2011.
      DESIGN STRENGTH 220 N/mm²
   b) UNLESS OTHERWISE INDICATED, ALL WELDS SHALL BE 5mm THICK FILLET WELD.
   c) ALL WELDING SHALL BE ELECTRODE PERFORMED BY QUALIFIED WELDERS, TO BE COMPLY WITH BS EN 1011.
   d) ALL SITE WELDS SHALL BE RECEIVED 2 COATS OF ZINE CHROMATE PRIMER.

7. SILICONE SEALANT :
   a) " DOW SIL – 791 " TO BE USED AS WEATHER SEALED & CAULKING SEALANT.

8. GASKET & SETTING BLOCK :
   a) ALL GASKET USED SHALL BE DENSE EXTRUDED SANTOPRENE WITH A HARDNESS OF 60°±5°.
   b) SETTING BLOCKS SHALL BE DENSE EXTRUDED SANTOPRENE WITH A HARDNESS OF 85°±5° DUROMETER SHORE A , A MIN. LENGTH OF 120 mm & A MIN. WIDTH CORRESPONDING TO THE GLASS THICKNESS & LOCATED AT GLASS 1/8 POINTS.

9. FASTENERS
   ALL FASTENERS, BOLTS & NUTS SHALL BE STAINLESS STEEL GRADE A4–70 COMPLYING WITH BS EN ISO 3506.

		FOR GRADE A4–70
MINIMUM YIELD STRENGTH, Ysb	=	450 MPa
ULTIMATE TENSILE STRENGTH, Usb	=	700 MPa
SHEAR STRENGTH, Psb	=	311 MPa
TENSILE STRENGTH, Ptb	=	450 MPa
BEARING STRENGTH, Pbb	=	828 MPa

   UNLESS OTHER SPECIFIED, ALL SCREWS SHALL BE M6 AT 300 C/C GRADE A4–70 STAINLESS STEEL COMPLIED WITH BS EN ISO 3506.(FOR NON–EXPOSED AREA)

10. CAST–IN CHANNEL, CAST–IN BOLT AND CAST–IN EMBED
    a) CAST–IN EMBED SHALL BE GRADE 8.8 COMPLY TO DIN975 & NUT TO BE GRADE 10 COMPLY TO BE BS 4190
       –TENSILE STRENGTH = 550N/m
       –SHEAR STRENGTH = 375N/m
       –BEARING STRENGTH = 1000N/m
    c) CAST–IN ROD SHALL BE GRADE JO S275 G.M.S. ROD TO BS EN 10025. GR. S275: YIELD STRENGTH = 275 N/mm
    d) CAST–IN BRACKETS. STIFFENERS AND GUSSET PLATES TO BE GRADE S275 JO (CLASS 1) TO BS EN 10025.
    e) ALL CAST IN CHANNEL SHALL BE " GRADE S235 G.M.S. ANCHOR CHANNEL
    f) ALL T HEAD BOLT USED TO BE " HILTI , HBC – C " – M16 (GRADE 8.8)
    g) THE DESIGN & INSTALLATION OF " HILTI " ANCHOR CHANNEL & T HEAD BOLT ARE STRICTLY IN ACCORDING WITH MANUFACTURER'S RECOMMENDATION

CHANNEL MODEL	BD REF. NO	MINIMUM DESIGN CRITERIA: CONCRETE THICKNESS (mm)	MINIMUM DESIGN CRITERIA: EDGE DISTANCE (UP/DOWN)(mm)	RECOMMENDED LOAD (kN) (CRACKED CONCRETE): TENSION	RECOMMENDED LOAD (kN) (CRACKED CONCRETE): SHEAR	PULL OUT TEST LOAD (kN) (1.5 x RECOMMENDED LOAD)
HAC-50	BD-AF134	250	150	27	23	33
HAC-70	BD-AF132	250	200	34.7	29.8	52.05

11. INSULATION
    a) FIRE STOP (BD REF. NO. BD–FS011)
    ALUMINIUM SOFFIT/CEILING/WALL SURFACE SHALL SEALED WITH FIRE SHEET & STEEL / CONCRETE INTERFACE 2 HOUR FIRE RAITING THERMAL INSULATION
    b) THERMAL INSULATION
    "CSR" 110Kg/mm ROCKWOOL FIBERTEX–820 SHALL BE 50mm THK.
    c) SMOKE SEAL SHALL BE COMPLY WITH FIRE CODE CLAUSE C10.2

12. OPENABLE WINDOWS
    a) ALL OPENABLE WINDOW SHALL BE CLOSED UNDER STRONG WIND CONDITION.
    b) ALL OPENABLE WINDOW SHALL BE APPROVAL UNDER LOCKED CONDITION.

13. ISOLATION FOR METALS

    SHALL BE APPLIED A LAYER OF BITUMINOUS PAINT FOR PROTECTION AGAINST BI–METALLIC CORROSION.

14. CONCRETE GRADE
    CONCRETE STRUCTURE SHOWN IN THE SUBMISSION SHALL BE OF GRADE 45D MINIMUM.

15. ANCHOR BOLT FOR ALUM. CLADDING
    ANCHOR BOLT TO BE "HILTI" TYPE,DESIGN AND INSTALLATION TO BE IN ACCORDANCE(FOR CRACKED CONCRETE)

Anchor Type	BD REF. NO	Min. embedment depth (mm) into sound concrete	Minimum edge distance in concrete	Minimum spacing in concrete	Recommended Load: Tensile (kN)	Recommended Load: Shear (kN)	Test load(1.5 x recommended tensile load) (kN)
~~M8x74 HST3-R~~	~~BD-AF151~~	~~64~~	~~40~~	~~50~~	~~2.5~~	~~5.2~~	~~=1.5x1.142x2.5=5.033~~
M10x90 HST3-R	BD-AF149	78	45	90	4.0	8.4	=1.5x1.15x4.0=7.080
M16x140 HST3-R	BD-AF148	82	80	70	8.3	16.8	=1.5x1.15x9.4=16.538

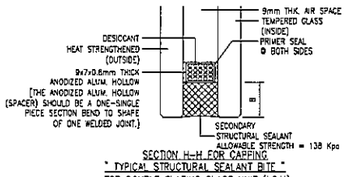

SECTION H–H FOR CAPPING
" TYPICAL STRUCTURAL SEALANT BITE "
FOR DOUBLE GLAZING GLASS UNIT (I.G.U)

QUALITY ASSURANCE DOCUMENT SUCH AS TEST REPORT / CERTIFICATES INDICATING COMPILES WITH ASTM E2190 OR EQUIVALENT WITH RESPECT TO THE SEAL PERFORMANCE FOR INSTALLING GLASS UNIT SHALL BE SUBMITTED TO BD PRIOR TO COMMENCE OF WORKS.

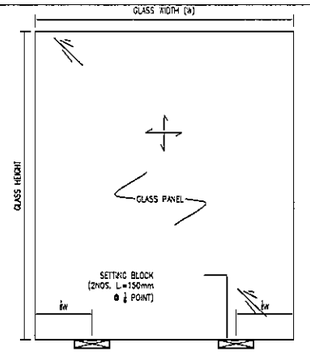

" TYPICAL ELEVATION FOR SETTING BLOCK LOCATION "
(N.T.S.)

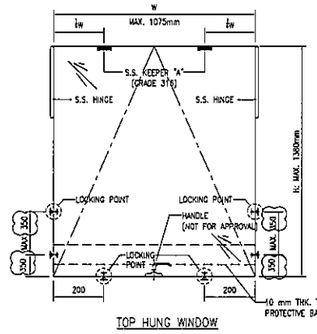

TOP HUNG WINDOW

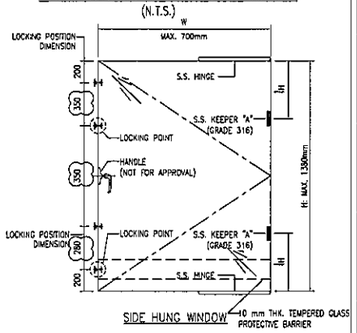

SIDE HUNG WINDOW — 10 mm THK. TEMPERED GLASS PROTECTIVE BARRIER

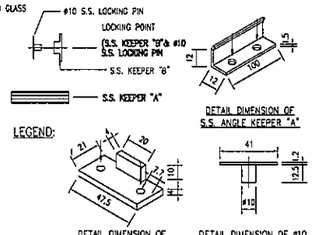

DETAIL DIMENSION OF S.S. ANGLE KEEPER "A"

LEGEND:

DETAIL DIMENSION OF S.S. KEEPER "B"

DETAIL DIMENSION OF ø10 S.S. LOCKING PIN

" TYPICAL CONFIGURATION OF OPENABLE WINDOW IN LOCKED POSITION "
(FOR APPROVAL UNDER THIS SUBMISSION)

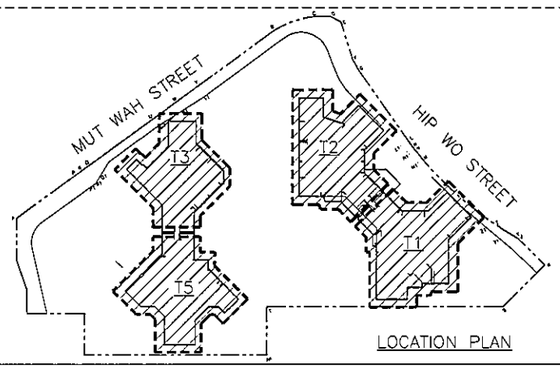

B.D. REF :

CLIENT :
偉和置業有限公司
Sino Land Company Limited

ARCHITECT : WONG TUNG & PARTNERS LIMITED ARCHITECTS & PLANNERS

MAIN CONTRACTOR :
CR Construction Company Limited

STRUCTURAL ENGINEER : AECOM

FACADE CONSULTANT: AECOM

NOTE :
1. ALL DIMENSIONS ARE IN mm.
2. ALL ELEVATIONS ARE VIEWED FROM OUTSIDE.
3. ALL DIMENSIONS TO BE VERIFIED ON SITE BEFORE FABRICATION.

LEGEND :
X1 / X001 — DETAIL MARK NO. / REFER SHEET NO.
1. F.F.L. --FINISHED FLOOR LEVEL
2. S.F.L. --STRUCTURAL FLOOR LEVEL
3. (R) --REVERSED DETAIL

NO.	DATE	REVISED	BY
D	20/05/2018	GENERAL REVISED	
C	22/12/2018	GENERAL REVISED	
B	25/11/2018	GENERAL REVISED	
A	10/9/2018	GENERAL REVISED	

JOB NO. : J–837

PROJECT :
URA KWUN TONG TOWN CENTRE REDEVELOPMENT (AREA 2 & 3) AT NKIL 6514, KWUN TONG, KWLOON

TITLE :
GENERAL NOTES FOR CURTAIN WALL

DATE : 13–JUL–18 | SCALE : 1:1 (A1)

DRAWN BY : ASING | CHECKED BY : –

美特鋁質有限公司
MIDI ALUMINIUM FABRICATOR LTD.
Units 6–8, Sunray Industrial Centre, 1/F
610 Cha Kwo Ling Road, Kowloon
Tel:23489211–4 Fax:(852)27727666

DWG NO. : J837–CW–GN01 | REV. : D

M1 --- ALUMINIUM MULLION | COATING --- PVF2 COATING
GRADE --- 6063 T6

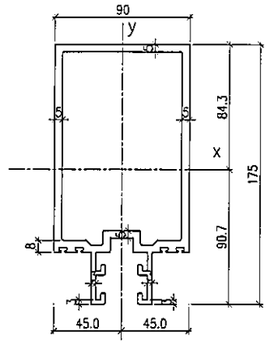

MASS PROPERTIES (UNIT)	VALUES
Area (mm²) :	2685.6
Perimeter (mm) :	1168.9
Bounding Box – X (mm):	–45.0 to 45.0
Bounding Box – Y (mm):	–90.7 to 84.3
Centroid – X (mm) :	0.0
Centroid – Y (mm) :	0.0
Moments of inertia – X (mm⁴) :	8560927.0
Moments of inertia – Y (mm⁴) :	3111287.7
Product of inertia – XY (mm⁴) :	0.0
Radii of gyration – X (mm) :	56.4
Radii of gyration – Y (mm) :	34.0
Principal moments along X–Y (mm⁴) :	8560927.0 along [1.0 0.0]
Principal moments along Y–X (mm⁴) :	3111287.7 along [0.0 1.0]
Elastic Modulus – Zx (mm³):	I / y–max= 94344.9
Elastic Modulus – Zy (mm³):	J / x–max= 69139.7

M2 --- ALUMINIUM MULLION | COATING --- PVF2 COATING
GRADE --- 6063 T6

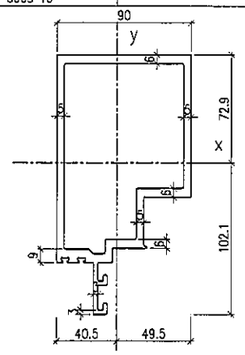

MASS PROPERTIES (UNIT)	VALUES
Area (mm²) :	2560.0
Perimeter (mm) :	1002.9
Bounding Box – X (mm):	–40.5 to 49.5
Bounding Box – Y (mm):	–102.1 to 72.9
Centroid – X (mm) :	0.0
Centroid – Y (mm) :	0.0
Moments of inertia – X (mm⁴) :	7148090.8
Moments of inertia – Y (mm⁴) :	2693592.6
Product of inertia – XY (mm⁴) :	–858464.6
Radii of gyration – X (mm) :	52.8
Radii of gyration – Y (mm) :	32.4
Principal moments along X–Y (mm⁴) :	7307806.3 along [1.0 –0.2]
Principal moments along Y–X (mm⁴) :	2533877.1 along [0.2 1.0]
Elastic Modulus – Zx (mm³):	I / y–max= 69979.9
Elastic Modulus – Zy (mm³):	J / x–max= 54419.8

M3 --- ALUMINIUM MULLION | COATING --- PVF2 COATING
GRADE --- 6063 T6

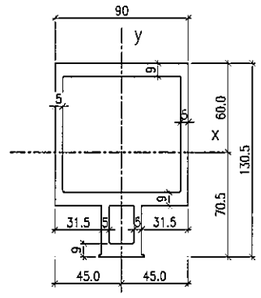

MASS PROPERTIES (UNIT)	VALUES
Area (mm²) :	2904.8
Perimeter (mm) :	845.0
Bounding Box – X (mm):	–45.0 to 45.0
Bounding Box – Y (mm):	–70.5 to 60.0
Centroid – X (mm) :	0.0
Centroid – Y (mm) :	0.0
Moments of inertia – X (mm⁴) :	5525541.9
Moments of inertia – Y (mm⁴) :	2552618.8
Product of inertia – XY (mm⁴) :	0.0
Radii of gyration – X (mm) :	43.6
Radii of gyration – Y (mm) :	29.6
Principal moments along X–Y (mm⁴) :	5525541.9 along [1.0 0.0]
Principal moments along Y–X (mm⁴) :	2552618.8 along [0.0 1.0]
Elastic Modulus – Zx (mm³):	I / y–max= 78397.1
Elastic Modulus – Zy (mm³):	J / x–max= 56724.9

M4 --- ALUMINIUM MULLION | COATING --- PVF2 COATING
GRADE --- 6063 T6

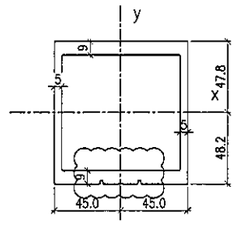

MASS PROPERTIES (UNIT)	VALUES
Area (mm²) :	2391.5
Perimeter (mm) :	694.8
Bounding Box – X (mm):	–45.0 to 45.0
Bounding Box – Y (mm):	–48.2 to 47.8
Centroid – X (mm) :	0.0
Centroid – Y (mm) :	0.0
Moments of inertia – X (mm⁴) :	3452385.8
Moments of inertia – Y (mm⁴) :	2503996.5
Product of inertia – XY (mm⁴) :	0.0
Radii of gyration – X (mm) :	38.0
Radii of gyration – Y (mm) :	32.4
Principal moments along X–Y (mm⁴) :	2503996.5 along [0.0 1.0]
Principal moments along Y–X (mm⁴) :	3452385.8 along [–1.0 0.0]
Elastic Modulus – Zx (mm³):	I / y–max= 71650.3
Elastic Modulus – Zy (mm³):	J / x–max= 55644.4

M5 --- ALUMINIUM MULLION | COATING --- PVF2 COATING
GRADE --- 6063 T6

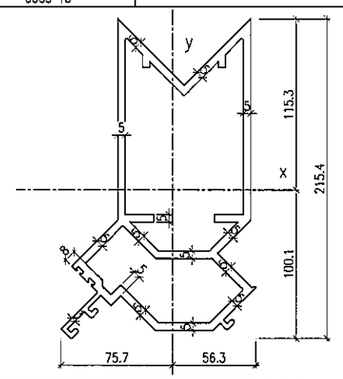

MASS PROPERTIES (UNIT)	VALUES
Area (mm²) :	4006.3
Perimeter (mm) :	1633.1
Bounding Box – X (mm):	–75.7 to 56.3
Bounding Box – Y (mm):	–100.1 to 115.3
Centroid – X (mm) :	0.0
Centroid – Y (mm) :	0.0
Moments of inertia – X (mm⁴) :	17546808.7
Moments of inertia – Y (mm⁴) :	5955158.6
Product of inertia – XY (mm⁴) :	–1928247.4
Radii of gyration – X (mm) :	66.2
Radii of gyration – Y (mm) :	38.6
Principal moments along X–Y (mm⁴) :	17859152.5 along [1.0 –0.2]
Principal moments along Y–X (mm⁴) :	5642814.9 along [0.2 1.0]
Elastic Modulus – Zx (mm³):	I / y–max= 152220.1
Elastic Modulus – Zy (mm³):	J / x–max= 78715.3

M6 --- ALUMINIUM MULLION | COATING --- PVF2 COATING
GRADE --- 6063 T6

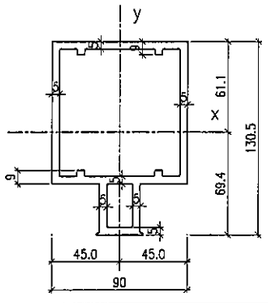

MASS PROPERTIES (UNIT)	VALUES
Area (mm²) :	2278.1
Perimeter (mm) :	895.8
Bounding Box – X (mm):	–45.0 to 45.0
Bounding Box – Y (mm):	–69.4 to 61.1
Centroid – X (mm) :	0.0
Centroid – Y (mm) :	0.0
Moments of inertia – X (mm⁴) :	4229062.4
Moments of inertia – Y (mm⁴) :	2263514.5
Product of inertia – XY (mm⁴) :	0.0
Radii of gyration – X (mm) :	43.1
Radii of gyration – Y (mm) :	31.5
Principal moments along X–Y (mm⁴) :	4229062.4 along [1.0 0.0]
Principal moments along Y–X (mm⁴) :	2263514.5 along [0.0 1.0]
Elastic Modulus – Zx (mm³):	I / y–max= 60912.9
Elastic Modulus – Zy (mm³):	J / x–max= 50300.3

M7 --- ALUMINIUM MULLION | COATING --- PVF2 COATING
GRADE --- 6063 T6

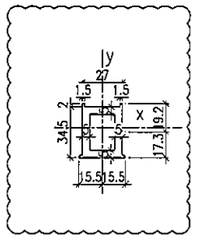

MASS PROPERTIES (UNIT)	VALUES
Area (mm²) :	526.8
Perimeter (mm) :	218.3
Bounding Box – X (mm):	–15.5 to 15.5
Bounding Box – Y (mm):	–17.3 to 19.2
Centroid – X (mm) :	0.0
Centroid – Y (mm) :	0.0
Moments of inertia – X (mm⁴) :	75041.8
Moments of inertia – Y (mm⁴) :	48619.6
Product of inertia – XY (mm⁴) :	0.0
Radii of gyration – X (mm) :	11.9
Radii of gyration – Y (mm) :	9.6
Principal moments along X–Y (mm⁴) :	48619.6 along [0.0 1.0]
Principal moments along Y–X (mm⁴) :	75041.8 along [–1.0 0.0]
Elastic Modulus – Zx (mm³):	I / y–max= 3908.2
Elastic Modulus – Zy (mm³):	J / x–max= 3136.7

T1 --- ALUMINIUM TRANSOM | COATING --- PVF2 COATING
GRADE --- 6063 T6

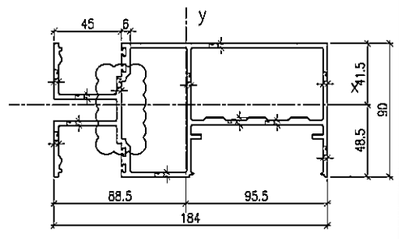

MASS PROPERTIES (UNIT)	VALUES
Area (mm²) :	2283.2
Perimeter (mm) :	1446.4
Bounding Box – X (mm):	–88.5 to 95.5
Bounding Box – Y (mm):	–48.5 to 41.5
Centroid – X (mm) :	0.0
Centroid – Y (mm) :	0.0
Moments of inertia – X (mm⁴) :	1841389.3
Moments of inertia – Y (mm⁴) :	8107752.5
Product of inertia – XY (mm⁴) :	–388294.0
Radii of gyration – X (mm) :	28.4
Radii of gyration – Y (mm) :	59.6
Principal moments along X–Y (mm⁴) :	1817420.4 along [1.0 0.1]
Principal moments along Y–X (mm⁴) :	8131721.4 along [–0.1 1.0]
Elastic Modulus – Zx (mm³):	I / y–max= 37934.0
Elastic Modulus – Zy (mm³):	J / x–max= 84907.9

T2 --- ALUMINIUM TRANSOM | COATING --- PVF2 COATING
GRADE --- 6063 T6

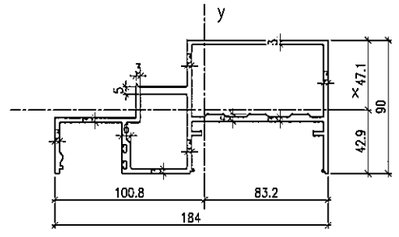

MASS PROPERTIES (UNIT)	VALUES
Area (mm²) :	1969.2
Perimeter (mm) :	1203.5
Bounding Box – X (mm):	–100.8 to 83.2
Bounding Box – Y (mm):	–42.9 to 47.1
Centroid – X (mm) :	0.0
Centroid – Y (mm) :	0.0
Moments of inertia – X (mm⁴) :	1401920.1
Moments of inertia – Y (mm⁴) :	6039676.5
Product of inertia – XY (mm⁴) :	1059596.3
Radii of gyration – X (mm) :	26.7
Radii of gyration – Y (mm) :	55.4
Principal moments along X–Y (mm⁴) :	1171300.2 along [1.0 0.2]
Principal moments along Y–X (mm⁴) :	6270296.4 along [–0.2 1.0]
Elastic Modulus – Zx (mm³):	I / y–max= 29761.3
Elastic Modulus – Zy (mm³):	J / x–max= 59896.7

T3 --- ALUMINIUM TRANSOM | COATING --- PVF2 COATING
GRADE --- 6063 T6

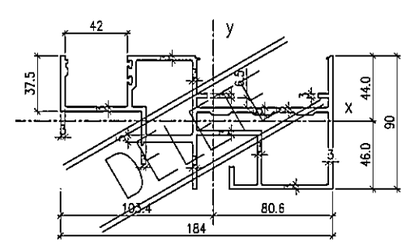

MASS PROPERTIES (UNIT)	VALUES
Area (mm²) :	2171.4
Perimeter (mm) :	1338.9
Bounding Box – X (mm):	–103.4 to 80.6
Bounding Box – Y (mm):	–46.0 to 44.0
Centroid – X (mm) :	0.0
Centroid – Y (mm) :	0.0
Moments of inertia – X (mm⁴) :	1410096.2
Moments of inertia – Y (mm⁴) :	6188637.8
Product of inertia – XY (mm⁴) :	–1175811.4
Radii of gyration – X (mm) :	25.5
Radii of gyration – Y (mm) :	53.4
Principal moments along X–Y (mm⁴) :	1136446.1 along [1.0 –0.2]
Principal moments along Y–X (mm⁴) :	6462287.9 along [0.2 1.0]
Elastic Modulus – Zx (mm³):	I / y–max= 30624.6
Elastic Modulus – Zy (mm³):	J / x–max= 59868.0

M4A --- ALUMINIUM MULLION | COATING --- PVF2 COATING
GRADE --- 6063 T6 & GRADE : S275

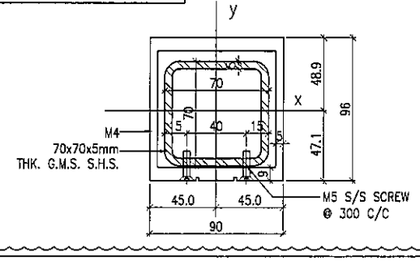

MASS PROPERTIES (UNIT)	VALUES
Area (mm²) :	3627.1
Perimeter (mm) :	1189.0
Bounding Box – X (mm):	–45.0 to 45.0
Bounding Box – Y (mm):	–47.1 to 48.9
Centroid – X (mm) :	0.0
Centroid – Y (mm) :	0.0
Moments of inertia – X (mm⁴) :	4307019.9
Moments of inertia – Y (mm⁴) :	3350288.4
Product of inertia – XY (mm⁴) :	0.0
Radii of gyration – X (mm) :	34.5
Radii of gyration – Y (mm) :	30.4
Principal moments along X–Y (mm⁴) :	3350288.4 along [0.0 1.0]
Principal moments along Y–X (mm⁴) :	4307019.9 along [–1.0 0.0]
Elastic Modulus – Zx (mm³):	I / y–max= 88066.8
Elastic Modulus – Zy (mm³):	J / x–max= 74450.9

B.D. REF :

CLIENT :
信和置業有限公司
Sino Land Company Limited

ARCHITECT :
WONG TUNG & PARTNERS LIMITED
ARCHITECTS & PLANNERS

MAIN CONTRACTOR :
CR Construction Company Limited

STRUCTURAL ENGINEER :
AECOM

FACADE CONSULTANT:
AECOM

NOTE :
1. ALL DIMENSIONS ARE IN mm.
2. ALL ELEVATIONS ARE VIEWED FROM OUTSIDE.
3. ALL DIMENSIONS TO BE VERIFIED ON SITE BEFORE FABRICATION.

LEGEND :
X1 / X001 — DETAIL MARK NO. / REFER SHEET NO.
1. F.F.L. --FINISHED FLOOR LEVEL
2. S.F.L. --STRUCTURAL FLOOR LEVEL
3. (/P) --REVERSED DETAIL

NO.	DATE	REVISED	BY
B	25/11/2018	GENERAL REVISED	
A	10/9/2018	GENERAL REVISED	

JOB NO. : J–837

PROJECT :
URA KWUN TONG TOWN CENTRE REDEVELOPMENT (AREA 2 & 3) AT NKIL 6514, KWUN TONG, KWLOON

TITLE :
TYPICAL MULLION DETAIL FOR CURTAIN WALL

DATE : 13–JUL–18 | SCALE : 1:2 (A1)

DRAWN BY : ASING | CHECKED BY : –

美特鋁質有限公司
MIDI ALUMINIUM FABRICATOR LTD.
Units 6–8, Sunray Industrial Centre, 1/F
610 Cha Kwo Ling Road, Kowloon
Tel:23489211–4 Fax:(852)27727666

DWG NO. : J837–CW–ML01 | REV. : B

T3A --- ALUMINIUM TRANSOM | COATING --- PVF2 COATING

GRADE --- 6063 T6

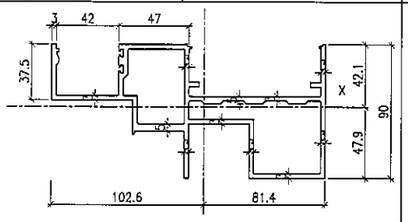

MASS PROPERTIES (UNIT)	VALUES
Area (mm2) :	2078.4
Perimeter (mm) :	1276.9
Bounding Box – X (mm):	−102.6 to 81.4
Bounding Box – Y (mm):	−47.9 to 42.1
Centroid – X (mm) :	0.0
Centroid – Y (mm) :	0.0
Moments of inertia – X (mm⁴) :	1239902.0
Moments of inertia – Y (mm⁴) :	6157299.2
Product of inertia – XY (mm⁴) :	−1105578.0
Radii of gyration – X (mm) :	24.4
Radii of gyration – Y (mm) :	54.4
Principal moments along X–Y (mm⁴) :	1002770.2 along [1.0 −0.2]
Principal moments along Y–X (mm⁴) :	6394431.0 along [0.2 1.0]
Elastic Modulus – Zx (mm³):	I / y-max= 25881.0
Elastic Modulus – Zy (mm³):	J / x-max= 60007.2

A01 --- ALUMINIUM CAP | COATING --- PVF2 COATING

GRADE --- 6063 T5

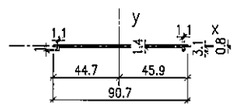

MASS PROPERTIES (UNIT)	VALUES
Area (mm2) :	132.6
Perimeter (mm) :	194.5
Bounding Box – X (mm):	−44.7 to 45.9
Bounding Box – Y (mm):	−3.1 to 0.8
Centroid – X (mm) :	0.0
Centroid – Y (mm) :	0.0
Moments of inertia – X (mm⁴) :	51.8
Moments of inertia – Y (mm⁴) :	96748.1
Product of inertia – XY (mm⁴) :	118.1
Radii of gyration – X (mm) :	0.6
Radii of gyration – Y (mm) :	27.0
Principal moments along X–Y (mm⁴) :	51.7 along [1.0 0.0]
Principal moments along Y–X (mm⁴) :	96748.3 along [0.0 1.0]
Elastic Modulus – Zx (mm³):	I / y-max= 16.6
Elastic Modulus – Zy (mm³):	J / x-max= 2107.2

A02 --- ALUM. WINDOW SASH | COATING --- PVF2 COATING

GRADE --- 6063 T6

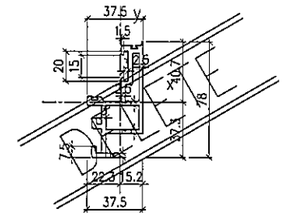

MASS PROPERTIES (UNIT)	VALUES
Area (mm2) :	673.8
Perimeter (mm) :	465.0
Bounding Box – X (mm):	−22.3 to 15.2
Bounding Box – Y (mm):	−37.3 to 40.7
Centroid – X (mm) :	0.0
Centroid – Y (mm) :	0.0
Moments of inertia – X (mm⁴) :	287162.6
Moments of inertia – Y (mm⁴) :	88704.2
Product of inertia – XY (mm⁴) :	−87527.0
Radii of gyration – X (mm) :	20.6
Radii of gyration – Y (mm) :	11.5
Principal moments along X–Y (mm⁴) :	320249.0 along [0.9 −0.4]
Principal moments along Y–X (mm⁴) :	55617.8 along [0.4 0.9]
Elastic Modulus – Zx (mm³):	I / y-max= 7060.2
Elastic Modulus – Zy (mm³):	J / x-max= 3982.3

A03 --- ALUMINIUM CAPPING | COATING --- PVF2 COATING

GRADE --- 6063 T6

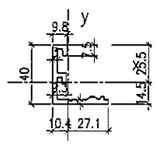

MASS PROPERTIES (UNIT)	VALUES
Area (mm2) :	304.6
Perimeter (mm) :	199.5
Bounding Box – X (mm):	−10.4 to 27.1
Bounding Box – Y (mm):	−14.5 to 25.5
Centroid – X (mm) :	0.0
Centroid – Y (mm) :	0.0
Moments of inertia – X (mm⁴) :	56645.9
Moments of inertia – Y (mm⁴) :	36421.8
Product of inertia – XY (mm⁴) :	−25163.9
Radii of gyration – X (mm) :	13.6
Radii of gyration – Y (mm) :	10.9
Principal moments along X–Y (mm⁴) :	19414.2 along [0.6 −0.8]
Principal moments along Y–X (mm⁴) :	73653.5 along [0.8 0.6]
Elastic Modulus – Zx (mm³):	I / y-max= 2224.1
Elastic Modulus – Zy (mm³):	J / x-max= 1346.3

A04 --- ALUM. WINDOW SASH | COATING --- PVF2 COATING

GRADE --- 6063 T6

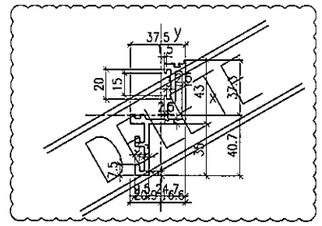

MASS PROPERTIES (UNIT)	VALUES
Area (mm2) :	559.7
Perimeter (mm) :	388.6
Bounding Box – X (mm):	−20.9 to 16.6
Bounding Box – Y (mm):	−40.7 to 37.3
Centroid – X (mm) :	0.0
Centroid – Y (mm) :	0.0
Moments of inertia – X (mm⁴) :	246529.6
Moments of inertia – Y (mm⁴) :	75425.8
Product of inertia – XY (mm⁴) :	−100120.7
Radii of gyration – X (mm) :	21.0
Radii of gyration – Y (mm) :	11.6
Principal moments along X–Y (mm⁴) :	292671.6 along [0.9 −0.4]
Principal moments along Y–X (mm⁴) :	29283.8 along [0.4 0.9]
Elastic Modulus – Zx (mm³):	I / y-max= 6058.8
Elastic Modulus – Zy (mm³):	J / x-max= 3609.7

A05 --- ALUMINIUM ADAPTER | COATING --- PVF2 COATING

GRADE --- 6063 T6

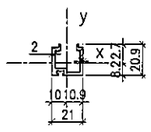

MASS PROPERTIES (UNIT)	VALUES
Area (mm2) :	138.3
Perimeter (mm) :	142.3
Bounding Box – X (mm):	−10.1 to 10.9
Bounding Box – Y (mm):	−8.2 to 12.7
Centroid – X (mm) :	0.0
Centroid – Y (mm) :	0.0
Moments of inertia – X (mm⁴) :	5995.3
Moments of inertia – Y (mm⁴) :	8724.2
Product of inertia – XY (mm⁴) :	−2.7
Radii of gyration – X (mm) :	6.6
Radii of gyration – Y (mm) :	7.9
Principal moments along X–Y (mm⁴) :	5995.3 along [1.0 0.0]
Principal moments along Y–X (mm⁴) :	8724.2 along [0.0 1.0]
Elastic Modulus – Zx (mm³):	I / y-max= 472.3
Elastic Modulus – Zy (mm³):	J / x-max= 798.7

A06 --- ALUM. SUB-FRAME | COATING --- PVF2 COATING

GRADE --- 6063 T6

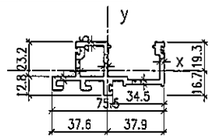

MASS PROPERTIES (UNIT)	VALUES
Area (mm2) :	644.3
Perimeter (mm) :	426.8
Bounding Box – X (mm):	−37.6 to 37.9
Bounding Box – Y (mm):	−16.7 to 19.3
Centroid – X (mm) :	0.0
Centroid – Y (mm) :	0.0
Moments of inertia – X (mm⁴) :	67511.8
Moments of inertia – Y (mm⁴) :	317162.2
Product of inertia – XY (mm⁴) :	−18128.4
Radii of gyration – X (mm) :	10.2
Radii of gyration – Y (mm) :	22.2
Principal moments along X–Y (mm⁴) :	66202.3 along [1.0 0.1]
Principal moments along Y–X (mm⁴) :	318471.7 along [−0.1 1.0]
Elastic Modulus – Zx (mm³):	I / y-max= 3500.1
Elastic Modulus – Zy (mm³):	J / x-max= 8373.3

A07 --- ALUM. SUB-FRAME | COATING --- PVF2 COATING

GRADE --- 6063 T6

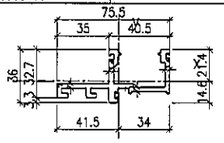

MASS PROPERTIES (UNIT)	VALUES
Area (mm2) :	542.1
Perimeter (mm) :	360.0
Bounding Box – X (mm):	−41.5 to 34.0
Bounding Box – Y (mm):	−14.6 to 21.4
Centroid – X (mm) :	0.0
Centroid – Y (mm) :	0.0
Moments of inertia – X (mm⁴) :	47327.7
Moments of inertia – Y (mm⁴) :	273371.8
Product of inertia – XY (mm⁴) :	−43936.6
Radii of gyration – X (mm) :	9.3
Radii of gyration – Y (mm) :	22.5
Principal moments along X–Y (mm⁴) :	39088.0 along [1.0 0.2]
Principal moments along Y–X (mm⁴) :	281611.5 along [−0.2 1.0]
Elastic Modulus – Zx (mm³):	I / y-max= 2215.7
Elastic Modulus – Zy (mm³):	J / x-max= 6593.1

A08 --- ALUMINIUM CAP | COATING --- PVF2 COATING

GRADE --- 6063 T5

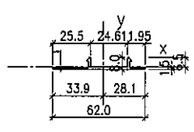

MASS PROPERTIES (UNIT)	VALUES
Area (mm2) :	99.0
Perimeter (mm) :	152.5
Bounding Box – X (mm):	−33.9 to 28.1
Bounding Box – Y (mm):	−1.5 to 6.5
Centroid – X (mm) :	0.0
Centroid – Y (mm) :	0.0
Moments of inertia – X (mm⁴) :	367.5
Moments of inertia – Y (mm⁴) :	26487.8
Product of inertia – XY (mm⁴) :	−416.4
Radii of gyration – X (mm) :	1.9
Radii of gyration – Y (mm) :	16.4
Principal moments along X–Y (mm⁴) :	360.9 along [1.0 0.0]
Principal moments along Y–X (mm⁴) :	26494.4 along [0.0 1.0]
Elastic Modulus – Zx (mm³):	I / y-max= 56.5
Elastic Modulus – Zy (mm³):	J / x-max= 780.7

A09 --- ALUMINIUM CAP | COATING --- PVF2 COATING

GRADE --- 6063 T5

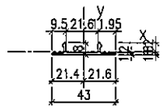

MASS PROPERTIES (UNIT)	VALUES
Area (mm2) :	78.5
Perimeter (mm) :	114.5
Bounding Box – X (mm):	−21.4 to 21.6
Bounding Box – Y (mm):	−1.8 to 6.2
Centroid – X (mm) :	0.0
Centroid – Y (mm) :	0.0
Moments of inertia – X (mm⁴) :	340.2
Moments of inertia – Y (mm⁴) :	10718.4
Product of inertia – XY (mm⁴) :	94.9
Radii of gyration – X (mm) :	2.1
Radii of gyration – Y (mm) :	11.7
Principal moments along X–Y (mm⁴) :	339.3 along [1.0 0.0]
Principal moments along Y–X (mm⁴) :	10719.3 along [0.0 1.0]
Elastic Modulus – Zx (mm³):	I / y-max= 54.4
Elastic Modulus – Zy (mm³):	J / x-max= 496.3

A10--- ALUMINIUM SLEEVE | COATING --- N/A FINISHED

GRADE --- 6061 T6

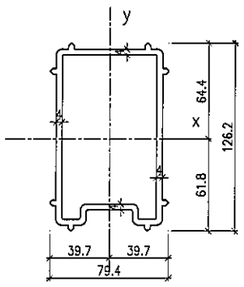

MASS PROPERTIES (UNIT)	VALUES
Area (mm2) :	1610.0
Perimeter (mm) :	796.5
Bounding Box – X (mm):	−39.7 to 39.7
Bounding Box – Y (mm):	−61.8 to 64.4
Centroid – X (mm) :	0.0
Centroid – Y (mm) :	0.0
Moments of inertia – X (mm⁴) :	3033893.6
Moments of inertia – Y (mm⁴) :	1355281.8
Product of inertia – XY (mm⁴) :	0.0
Radii of gyration – X (mm) :	43.4
Radii of gyration – Y (mm) :	29.0
Principal moments along X–Y (mm⁴) :	3033893.6 along [1.0 0.0]
Principal moments along Y–X (mm⁴) :	1355281.8 along [0.0 1.0]
Elastic Modulus – Zx (mm³):	I / y-max= 47097.3
Elastic Modulus – Zy (mm³):	J / x-max= 34138.1

A11--- ALUMINIUM SLEEVE | COATING --- N/A FINISHED

GRADE --- 6061 T6

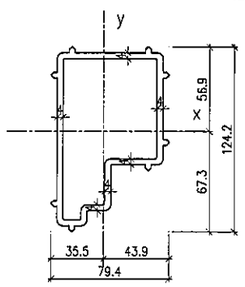

MASS PROPERTIES (UNIT)	VALUES
Area (mm2) :	1513.2
Perimeter (mm) :	748.1
Bounding Box – X (mm):	−35.5 to 43.9
Bounding Box – Y (mm):	−67.3 to 56.9
Centroid – X (mm) :	0.0
Centroid – Y (mm) :	0.0
Moments of inertia – X (mm⁴) :	2280153.3
Moments of inertia – Y (mm⁴) :	1114388.9
Product of inertia – XY (mm⁴) :	−380553.7
Radii of gyration – X (mm) :	38.8
Radii of gyration – Y (mm) :	27.1
Principal moments along X–Y (mm⁴) :	2393383.7 along [1.0 −0.3]
Principal moments along Y–X (mm⁴) :	1001158.5 along [0.3 1.0]
Elastic Modulus – Zx (mm³):	I / y-max= 33883.4
Elastic Modulus – Zy (mm³):	J / x-max= 25407.2

A12--- ALUMINIUM SLEEVE | COATING --- N/A FINISHED

GRADE --- 6061 T6

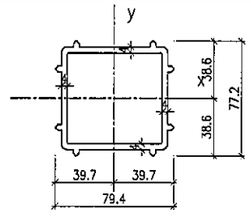

MASS PROPERTIES (UNIT)	VALUES
Area (mm2) :	1150.1
Perimeter (mm) :	568.7
Bounding Box – X (mm):	−39.7 to 39.7
Bounding Box – Y (mm):	−38.6 to 38.6
Centroid – X (mm) :	0.0
Centroid – Y (mm) :	0.0
Moments of inertia – X (mm⁴) :	832674.0
Moments of inertia – Y (mm⁴) :	888679.5
Product of inertia – XY (mm⁴) :	0.0
Radii of gyration – X (mm) :	26.9
Radii of gyration – Y (mm) :	27.8
Principal moments along X–Y (mm⁴) :	832674.0 along [1.0 0.0]
Principal moments along Y–X (mm⁴) :	888679.5 along [0.0 1.0]
Elastic Modulus – Zx (mm³):	I / y-max= 21571.9
Elastic Modulus – Zy (mm³):	J / x-max= 22384.9

A13--- ALUMINIUM SLEEVE | COATING --- N/A FINISHED

GRADE --- 6061 T6

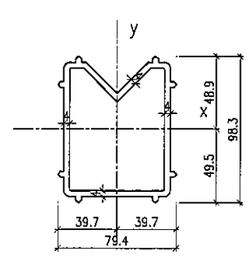

MASS PROPERTIES (UNIT)	VALUES
Area (mm2) :	1391.1
Perimeter (mm) :	689.2
Bounding Box – X (mm):	−39.7 to 39.7
Bounding Box – Y (mm):	−49.5 to 48.9
Centroid – X (mm) :	0.0
Centroid – Y (mm) :	0.0
Moments of inertia – X (mm⁴) :	1512584.9
Moments of inertia – Y (mm⁴) :	1092190.4
Product of inertia – XY (mm⁴) :	0.0
Radii of gyration – X (mm) :	33.0
Radii of gyration – Y (mm) :	28.0
Principal moments along X–Y (mm⁴) :	1512584.9 along [1.0 0.0]
Principal moments along Y–X (mm⁴) :	1092190.4 along [0.0 1.0]
Elastic Modulus – Zx (mm³):	I / y-max= 30570.9
Elastic Modulus – Zy (mm³):	J / x-max= 27511.1

A14--- ALUMINIUM CAPPING | COATING --- N/A FINISHED

GRADE --- 6063 T6

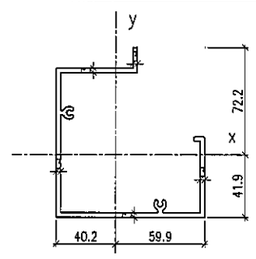

MASS PROPERTIES (UNIT)	VALUES
Area (mm2) :	1035.4
Perimeter (mm) :	703.6
Bounding Box – X (mm):	−40.2 to 59.9
Bounding Box – Y (mm):	−41.9 to 72.2
Centroid – X (mm) :	0.0
Centroid – Y (mm) :	0.0
Moments of inertia – X (mm⁴) :	1566832.4
Moments of inertia – Y (mm⁴) :	1420341.0
Product of inertia – XY (mm⁴) :	485422.7
Radii of gyration – X (mm) :	38.9
Radii of gyration – Y (mm) :	37.0
Principal moments along X–Y (mm⁴) :	1984504.3 along [0.8 0.7]
Principal moments along Y–X (mm⁴) :	1002669.1 along [−0.7 0.8]
Elastic Modulus – Zx (mm³):	I / y-max= 21697.1
Elastic Modulus – Zy (mm³):	J / x-max= 23696.2

B.D. REF :

CLIENT :
信和置業有限公司
Sino Land Company Limited

ARCHITECT :
WONG TUNG & PARTNERS LIMITED
ARCHITECTS & PLANNERS

MAIN CONTRACTOR :
CR Construction Company Limited

STRUCTURAL ENGINEER :
AECOM

FACADE CONSULTANT:
AECOM

NOTE :
1. ALL DIMENSIONS ARE IN mm.
2. ALL ELEVATIONS ARE VIEWED FROM OUTSIDE.
3. ALL DIMENSIONS TO BE VERIFIED ON SITE BEFORE FABRICATION.

LEGEND :
X1 — DETAIL MARK NO.
X001 — REFER SHEET NO.

1. F.F.L. --FINISHED FLOOR LEVEL
2. S.F.L. --STRUCTURAL FLOOR LEVEL
3. (R) --REVERSED DETAIL

NO.	DATE	REMARK	BY
C	22/12/2018	GENERAL REVISED	
B	25/11/2018	GENERAL REVISED	
A	10/9/2018	GENERAL REVISED	

JOB NO. : J-837

PROJECT :
URA KWUN TONG TOWN CENTRE REDEVELOPMENT (AREA 2 & 3) AT NKIL 6514, KWUN TONG, KWLOON

TITLE :
TYPICAL MULLION DETAIL FOR CURTAIN WALL

DATE : 13-JUL-18 | SCALE : 1:2 (A1)

DRAWN BY : ASING | CHECKED BY : –

美特鋁質有限公司
MIDI ALUMINIUM FABRICATOR LTD.
Units 6-8, Sunray Industrial Centre, 1/F
610 Cha Kwo Ling Road, Kowloon
Tel:23489211-4 Fax:(852)27727666

DWG NO. : J837-CW-MLO2 | REV. : C

A15 --- ALUMINIUM ADAPTER | COATING --- N/A FINISHED

GRADE --- 6063 T6

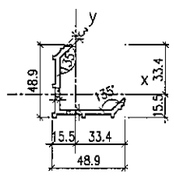

MASS PROPERTIES (UNIT)	VALUES
Area (mm²) :	315.6
Perimeter (mm) :	227.1
Bounding Box – X (mm):	−15.5 to 33.4
Bounding Box – Y (mm):	−15.5 to 33.4
Centroid – X (mm) :	0.0
Centroid – Y (mm) :	0.0
Moments of inertia – X (mm⁴) :	71527.2
Moments of inertia – Y (mm⁴) :	71527.2
Product of inertia – XY (mm⁴) :	−35469.7
Radii of gyration – X (mm) :	15.1
Radii of gyration – Y (mm) :	15.1
Principal moments along X–Y (mm⁴) :	36057.4 along [0.7 −0.7]
Principal moments along Y–X (mm⁴) :	106996.9 along [0.7 0.7]
Elastic Modulus – Zx (mm³):	I / y–max= 2142.2
Elastic Modulus – Zy (mm³):	J / x–max= 2142.2

A16 --- ALUMINIUM CAP | COATING --- PVF2 COATING

GRADE --- 6063 T5

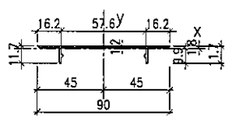

MASS PROPERTIES (UNIT)	VALUES
Area (mm²) :	135.5
Perimeter (mm) :	224.1
Bounding Box – X (mm):	−45.0 to 45.0
Bounding Box – Y (mm):	−9.9 to 1.8
Centroid – X (mm) :	0.0
Centroid – Y (mm) :	0.0
Moments of inertia – X (mm⁴) :	1029.5
Moments of inertia – Y (mm⁴) :	94802.7
Product of inertia – XY (mm⁴) :	0.0
Radii of gyration – X (mm) :	2.8
Radii of gyration – Y (mm) :	26.5
Principal moments along X–Y (mm⁴) :	1029.5 along [1.0 0.0]
Principal moments along Y–X (mm⁴) :	94802.7 along [0.0 1.0]
Elastic Modulus – Zx (mm³):	I / y–max= 104.5
Elastic Modulus – Zy (mm³):	J / x–max= 2106.7

A17 --- ALUMINIUM BAR | COATING --- PVF2 COATING

GRADE --- 6061 T6

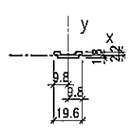

MASS PROPERTIES (UNIT)	VALUES
Area (mm²) :	51.2
Perimeter (mm) :	47.6
Bounding Box – X (mm):	−9.8 to 9.8
Bounding Box – Y (mm):	−1.8 to 2.2
Centroid – X (mm) :	0.0
Centroid – Y (mm) :	0.0
Moments of inertia – X (mm⁴) :	59.4
Moments of inertia – Y (mm⁴) :	1508.7
Product of inertia – XY (mm⁴) :	0.0
Radii of gyration – X (mm) :	1.1
Radii of gyration – Y (mm) :	5.4
Principal moments along X–Y (mm⁴) :	59.4 along [1.0 0.0]
Principal moments along Y–X (mm⁴) :	1508.7 along [0.0 1.0]
Elastic Modulus – Zx (mm³):	I / y–max= 26.9
Elastic Modulus – Zy (mm³):	J / x–max= 153.9

S01 --- ALUMINIUM ADAPTER | COATING --- PVF2 COATING

GRADE --- 6063 T6

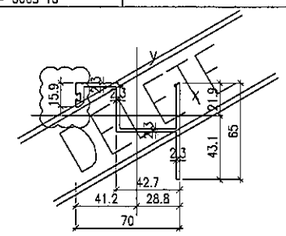

MASS PROPERTIES (UNIT)	VALUES
Area (mm²) :	432.3
Perimeter (mm) :	369.4
Bounding Box – X (mm):	−41.2 to 28.8
Bounding Box – Y (mm):	−43.1 to 21.9
Centroid – X (mm) :	0.0
Centroid – Y (mm) :	0.0
Moments of inertia – X (mm⁴) :	125442.4
Moments of inertia – Y (mm⁴) :	275101.2
Product of inertia – XY (mm⁴) :	−119565.0
Radii of gyration – X (mm) :	17.0
Radii of gyration – Y (mm) :	25.2
Principal moments along X–Y (mm⁴) :	59221.4 along [0.9 −0.5]
Principal moments along Y–X (mm⁴) :	341322.2 along [0.5 0.9]
Elastic Modulus – Zx (mm³):	I / y–max= 2910.1
Elastic Modulus – Zy (mm³):	J / x–max= 6675.8

S02 --ALUMINIUM DOOR FRAME | COATING --- PVF2 COATING

GRADE --- 6063 T6

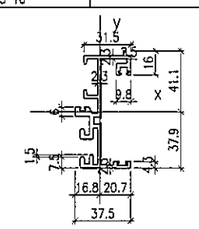

MASS PROPERTIES (UNIT)	VALUES
Area (mm²) :	587.9
Perimeter (mm) :	494.5
Bounding Box – X (mm):	−16.8 to 20.7
Bounding Box – Y (mm):	−37.9 to 41.1
Centroid – X (mm) :	0.0
Centroid – Y (mm) :	0.0
Moments of inertia – X (mm⁴) :	408805.4
Moments of inertia – Y (mm⁴) :	55024.6
Product of inertia – XY (mm⁴) :	44223.2
Radii of gyration – X (mm) :	26.4
Radii of gyration – Y (mm) :	9.7
Principal moments along X–Y (mm⁴) :	49580.4 along [0.1 1.0]
Principal moments along Y–X (mm⁴) :	414249.6 along [−1.0 0.1]
Elastic Modulus – Zx (mm³):	I / y–max= 9943.6
Elastic Modulus – Zy (mm³):	J / x–max= 2652.8

S03 --- ALUMINIUM ADAPTER | COATING --- PVF2 COATING

GRADE --- 6063 T6

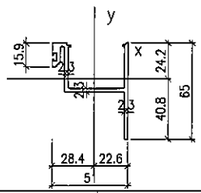

MASS PROPERTIES (UNIT)	VALUES
Area (mm²) :	388.6
Perimeter (mm) :	331.4
Bounding Box – X (mm):	−28.4 to 22.6
Bounding Box – Y (mm):	−40.8 to 24.2
Centroid – X (mm) :	0.0
Centroid – Y (mm) :	0.0
Moments of inertia – X (mm⁴) :	104504.4
Moments of inertia – Y (mm⁴) :	154744.3
Product of inertia – XY (mm⁴) :	−71275.1
Radii of gyration – X (mm) :	16.4
Radii of gyration – Y (mm) :	20.0
Principal moments along X–Y (mm⁴) :	54052.2 along [0.8 −0.6]
Principal moments along Y–X (mm⁴) :	205196.5 along [0.6 0.8]
Elastic Modulus – Zx (mm³):	I / y–max= 2563.1
Elastic Modulus – Zy (mm³):	J / x–max= 5440.7

S04 --ALUMINIUM DOOR FRAME | COATING --- PVF2 COATING

GRADE --- 6063 T6

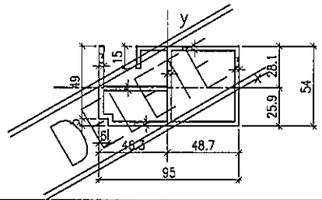

MASS PROPERTIES (UNIT)	VALUES
Area (mm²) :	1098.0
Perimeter (mm) :	732.6
Bounding Box – X (mm):	−46.3 to 48.7
Bounding Box – Y (mm):	−25.9 to 28.1
Centroid – X (mm) :	0.0
Centroid – Y (mm) :	0.0
Moments of inertia – X (mm⁴) :	416878.4
Moments of inertia – Y (mm⁴) :	1054801.2
Product of inertia – XY (mm⁴) :	41128.1
Radii of gyration – X (mm) :	19.5
Radii of gyration – Y (mm) :	31.0
Principal moments along X–Y (mm⁴) :	414237.8 along [1.0 0.1]
Principal moments along Y–X (mm⁴) :	1057441.9 along [−0.1 1.0]
Elastic Modulus – Zx (mm³):	I / y–max= 14840.4
Elastic Modulus – Zy (mm³):	J / x–max= 21644.0

S05 --- ALUMINIUM FRAME | COATING --- PVF2 COATING

GRADE --- 6063 T6

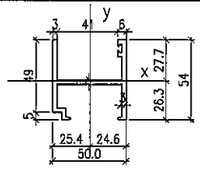

MASS PROPERTIES (UNIT)	VALUES
Area (mm²) :	504.5
Perimeter (mm) :	348.1
Bounding Box – X (mm):	−25.4 to 24.6
Bounding Box – Y (mm):	−26.3 to 27.7
Centroid – X (mm) :	0.0
Centroid – Y (mm) :	0.0
Moments of inertia – X (mm⁴) :	102891.8
Moments of inertia – Y (mm⁴) :	215062.9
Product of inertia – XY (mm⁴) :	−13391.3
Radii of gyration – X (mm) :	14.3
Radii of gyration – Y (mm) :	20.6
Principal moments along X–Y (mm⁴) :	101315.2 along [1.0 0.1]
Principal moments along Y–X (mm⁴) :	216639.4 along [−0.1 1.0]
Elastic Modulus – Zx (mm³):	I / y–max= 3711.5
Elastic Modulus – Zy (mm³):	J / x–max= 8464.2

S06 --- ALUMINIUM ADAPTER | COATING --- PVF2 COATING

GRADE --- 6063 T6

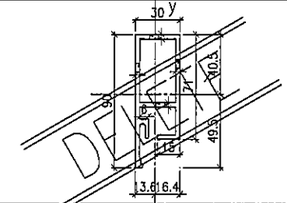

MASS PROPERTIES (UNIT)	VALUES
Area (mm²) :	707.2
Perimeter (mm) :	480.2
Bounding Box – X (mm):	−13.6 to 16.4
Bounding Box – Y (mm):	−49.5 to 40.5
Centroid – X (mm) :	0.0
Centroid – Y (mm) :	0.0
Moments of inertia – X (mm⁴) :	459441.1
Moments of inertia – Y (mm⁴) :	99079.8
Product of inertia – XY (mm⁴) :	35988.4
Radii of gyration – X (mm) :	25.5
Radii of gyration – Y (mm) :	11.8
Principal moments along X–Y (mm⁴) :	463000.0 along [−1.0 0.1]
Principal moments along Y–X (mm⁴) :	95520.9 along [0.1 1.0]
Elastic Modulus – Zx (mm³):	I / y–max= 9285.8
Elastic Modulus – Zy (mm³):	J / x–max= 6046.4

S07 --- ALUMINIUM ADAPTER | COATING --- PVF2 COATING

GRADE --- 6063 T6

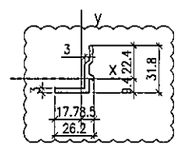

MASS PROPERTIES (UNIT)	VALUES
Area (mm²) :	156.3
Perimeter (mm) :	116.4
Bounding Box – X (mm):	−17.7 to 8.5
Bounding Box – Y (mm):	−9.4 to 22.4
Centroid – X (mm) :	0.0
Centroid – Y (mm) :	0.0
Moments of inertia – X (mm⁴) :	13005.1
Moments of inertia – Y (mm⁴) :	8019.9
Product of inertia – XY (mm⁴) :	6587.5
Radii of gyration – X (mm) :	9.1
Radii of gyration – Y (mm) :	7.2
Principal moments along X–Y (mm⁴) :	3469.2 along [0.6 0.8]
Principal moments along Y–X (mm⁴) :	17555.8 along [−0.8 0.6]
Elastic Modulus – Zx (mm³):	I / y–max= 581.5
Elastic Modulus – Zy (mm³):	J / x–max= 452.9

S08 --- ALUMINIUM ADAPTER | COATING --- PVF2 COATING

GRADE --- 6063 T6

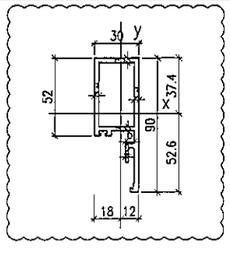

MASS PROPERTIES (UNIT)	VALUES
Area (mm²) :	630.7
Perimeter (mm) :	425.0
Bounding Box – X (mm):	−18.0 to 12.0
Bounding Box – Y (mm):	−52.6 to 37.4
Centroid – X (mm) :	0.0
Centroid – Y (mm) :	0.0
Moments of inertia – X (mm⁴) :	403620.5
Moments of inertia – Y (mm⁴) :	83564.6
Product of inertia – XY (mm⁴) :	−63394.8
Radii of gyration – X (mm) :	25.3
Radii of gyration – Y (mm) :	11.5
Principal moments along X–Y (mm⁴) :	71465.2 along [0.2 −1.0]
Principal moments along Y–X (mm⁴) :	415720.0 along [1.0 0.2]
Elastic Modulus – Zx (mm³):	I / y–max= 7676.3
Elastic Modulus – Zy (mm³):	J / x–max= 4647.2

S09 --- ALUMINIUM CAP | COATING --- PVF2 COATING

GRADE --- 6063 T5

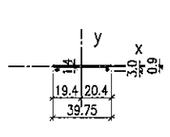

MASS PROPERTIES (UNIT)	VALUES
Area (mm²) :	61.3
Perimeter (mm) :	92.7
Bounding Box – X (mm):	−19.4 to 20.4
Bounding Box – Y (mm):	−3.0 to 0.9
Centroid – X (mm) :	0.0
Centroid – Y (mm) :	0.0
Moments of inertia – X (mm⁴) :	38.4
Moments of inertia – Y (mm⁴) :	8823.5
Product of inertia – XY (mm⁴) :	42.8
Radii of gyration – X (mm) :	0.8
Radii of gyration – Y (mm) :	12.0
Principal moments along X–Y (mm⁴) :	38.2 along [1.0 0.0]
Principal moments along Y–X (mm⁴) :	8823.7 along [0.0 1.0]
Elastic Modulus – Zx (mm³):	I / y–max= 12.9
Elastic Modulus – Zy (mm³):	J / x–max= 432.8

S10--- ALUMINIUM ADAPTER | COATING --- N/A FINISHED

GRADE --- 6063 T6

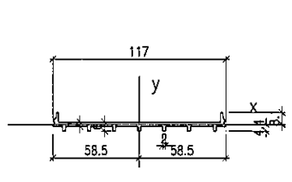

MASS PROPERTIES (UNIT)	VALUES
Area (mm²) :	415.1
Perimeter (mm) :	301.1
Bounding Box – X (mm):	−58.5 to 58.5
Bounding Box – Y (mm):	−4.4 to 8.1
Centroid – X (mm) :	0.0
Centroid – Y (mm) :	0.0
Moments of inertia – X (mm⁴) :	1191.9
Moments of inertia – Y (mm⁴) :	517216.1
Product of inertia – XY (mm⁴) :	0.0
Radii of gyration – X (mm) :	1.7
Radii of gyration – Y (mm) :	35.3
Principal moments along X–Y (mm⁴) :	1191.9 along [1.0 0.0]
Principal moments along Y–X (mm⁴) :	517216.1 along [0.0 1.0]
Elastic Modulus – Zx (mm³):	I / y–max= 148.0
Elastic Modulus – Zy (mm³):	J / x–max= 8841.3

S11--- ALUMINIUM CHANNEL | COATING --- PVF2 COATING

GRADE --- 6063 T6

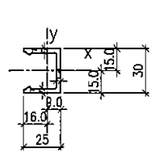

MASS PROPERTIES (UNIT)	VALUES
Area (mm²) :	224.8
Perimeter (mm) :	154.0
Bounding Box – X (mm):	−16.0 to 9.0
Bounding Box – Y (mm):	−15.0 to 15.0
Centroid – X (mm) :	0.0
Centroid – Y (mm) :	0.0
Moments of inertia – X (mm⁴) :	31228.0
Moments of inertia – Y (mm⁴) :	13928.5
Product of inertia – XY (mm⁴) :	0.0
Radii of gyration – X (mm) :	11.8
Radii of gyration – Y (mm) :	7.9
Principal moments along X–Y (mm⁴) :	31228.0 along [1.0 0.0]
Principal moments along Y–X (mm⁴) :	13928.5 along [0.0 1.0]
Elastic Modulus – Zx (mm³):	I / y–max= 2081.9
Elastic Modulus – Zy (mm³):	J / x–max= 871.6

S12 --- ALUMINIUM ADAPTER | COATING --- PVF2 COATING

GRADE --- 6063 T6

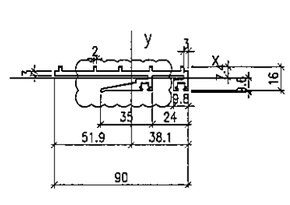

MASS PROPERTIES (UNIT)	VALUES
Area (mm²) :	500.8
Perimeter (mm) :	364.3
Bounding Box – X (mm):	−51.9 to 38.1
Bounding Box – Y (mm):	−9.6 to 7.4
Centroid – X (mm) :	0.0
Centroid – Y (mm) :	0.0
Moments of inertia – X (mm⁴) :	9631.4
Moments of inertia – Y (mm⁴) :	298985.8
Product of inertia – XY (mm⁴) :	−11984.1
Radii of gyration – X (mm) :	4.4
Radii of gyration – Y (mm) :	24.4
Principal moments along X–Y (mm⁴) :	9135.9 along [1.0 0.0]
Principal moments along Y–X (mm⁴) :	299481.3 along [0.0 1.0]
Elastic Modulus – Zx (mm³):	I / y–max= 1004.5
Elastic Modulus – Zy (mm³):	J / x–max= 5755.3

B.D. REF :

CLIENT :
信和置業有限公司
Sino Land Company Limited

ARCHITECT :
WONG TUNG & PARTNERS LIMITED
ARCHITECTS & PLANNERS

MAIN CONTRACTOR :
CR Construction Company Limited

STRUCTURAL ENGINEER :
AECOM

FACADE CONSULTANT:
AECOM

NOTE :
1. ALL DIMENSIONS ARE IN mm.
2. ALL ELEVATIONS ARE VIEWED FROM OUTSIDE.
3. ALL DIMENSIONS TO BE VERIFIED ON SITE BEFORE FABRICATION.

LEGEND :
- X1 / <001 — DETAIL MARK NO. / REFER SHEET NO.
1. F.F.L. --FINISHED FLOOR LEVEL
2. S.F.L. --STRUCTURAL FLOOR LEVEL
3. (P) --REVERSED DETAIL

NO.	DATE	REVISED	BY
C	22/12/2018	GENERAL REVISED	
B	25/11/2018	GENERAL REVISED	
A	10/9/2018	GENERAL REVISED	

JOB NO. : J–837

PROJECT :
URA KWUN TONG TOWN CENTRE REDEVELOPMENT (AREA 2 & 3) AT NKIL 6514, KWUN TONG, KWLOON

TITLE :
TYPICAL MULLION DETAIL FOR CURTAIN WALL

DATE : 13–JUL–18 | SCALE : 1:2 (A1)

DRAWN BY : ASING | CHECKED BY : –

美特鋁質有限公司
MIDI ALUMINIUM FABRICATOR LTD.
Units 6–8, Sunray Industrial Centre, 1/F
610 Cha Kwo Ling Road, Kowloon
Tel:23489211–4 Fax:(852)27727666

DWG NO. : J837–CW–ML03 | REV. : C

S13 --- ALUMINIUM FRAME / COATING --- PVF2 COATING

GRADE --- 6063 T6

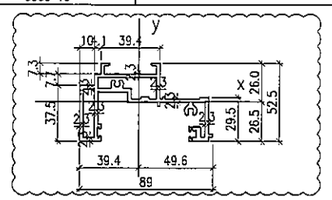
y
x
10.1
39.4
7.3
7.1
2.3
2.3
2.3
2.3
2.3
2.3
37.5
2.3
2.3
2.3
2.3
2.3
2.3

AB01--- ALUMINIUM BRACKET | COATING --- N/A FINISHED

GRADE --- 6061 T6

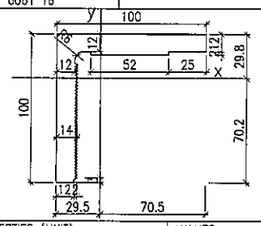

MASS PROPERTIES (UNIT)	VALUES
Area (mm2) :	2465.2
Perimeter (mm) :	464.1
Bounding Box - X (mm):	-29.5 to 70.5
Bounding Box - Y (mm):	-70.2 to 29.8
Centroid - X (mm) :	0.0
Centroid - Y (mm) :	0.0
Moments of inertia - X (mm4) :	2263878.7
Moments of inertia - Y (mm4) :	2192677.8
Product of inertia - XY (mm4) :	1315331.7
Radii of gyration - X (mm) :	30.3
Radii of gyration - Y (mm) :	29.8
Principal moments along X-Y (mm4) :	912464.8 along [0.7 0.7]
Principal moments along Y-X (mm4) :	3544091.7 along [-0.7 0.7]
Elastic Modulus - Zx (mm3):	I / y-max= 32262.0
Elastic Modulus - Zy (mm3):	J / x-max= 31110.8

AB2--- ALUM. SERRATE PLATE | COATING --- N/A FINISHED

GRADE --- 6061 T6

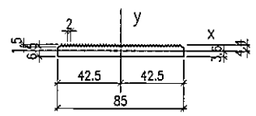

MASS PROPERTIES (UNIT)	VALUES
Area (mm2) :	613.6
Perimeter (mm) :	248.0
Bounding Box - X (mm):	-42.5 to 42.5
Bounding Box - Y (mm):	-3.6 to 4.4
Centroid - X (mm) :	0.0
Centroid - Y (mm) :	0.0
Moments of inertia - X (mm4) :	2728.1
Moments of inertia - Y (mm4) :	366334.2
Product of inertia - XY (mm4) :	0.0
Radii of gyration - X (mm) :	2.1
Radii of gyration - Y (mm) :	24.4
Principal moments along X-Y (mm4) :	2728.1 along [1.0 0.0]
Principal moments along Y-X (mm4) :	366334.2 along [0.0 1.0]
Elastic Modulus - Zx (mm3):	I / y-max= 623.4
Elastic Modulus - Zy (mm3):	J / x-max= 8619.6

AB4--- ALUM. ANGLE BRACKET | COATING --- N/A FINISHED

GRADE --- 6061 T6

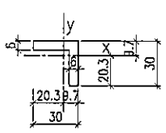

MASS PROPERTIES (UNIT)	VALUES
Area (mm2) :	324.0
Perimeter (mm) :	120.0
Bounding Box - X (mm):	-20.3 to 9.7
Bounding Box - Y (mm):	-20.3 to 9.7
Centroid - X (mm) :	0.0
Centroid - Y (mm) :	0.0
Moments of inertia - X (mm4) :	25452.0
Moments of inertia - Y (mm4) :	25452.0
Product of inertia - XY (mm4) :	-14400.0
Radii of gyration - X (mm) :	8.9
Radii of gyration - Y (mm) :	8.9
Principal moments along X-Y (mm4) :	11052.0 along [0.7 -0.7]
Principal moments along Y-X (mm4) :	39852.0 along [0.7 0.7]
Elastic Modulus - Zx (mm3):	I / y-max= 1251.7
Elastic Modulus - Zy (mm3):	J / x-max= 1251.7

AB5--- ALUM. ANGLE BRACKET | COATING --- N/A FINISHED

GRADE --- 6061 T6

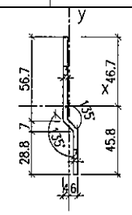

MASS PROPERTIES (UNIT)	VALUES
Area (mm2) :	324.0
Perimeter (mm) :	120.0
Bounding Box - X (mm):	-20.3 to 9.7
Bounding Box - Y (mm):	-20.3 to 9.7
Centroid - X (mm) :	0.0
Centroid - Y (mm) :	0.0
Moments of inertia - X (mm4) :	25452.0
Moments of inertia - Y (mm4) :	25452.0
Product of inertia - XY (mm4) :	-14400.0
Radii of gyration - X (mm) :	8.9
Radii of gyration - Y (mm) :	8.9
Principal moments along X-Y (mm4) :	11052.0 along [0.7 -0.7]
Principal moments along Y-X (mm4) :	39852.0 along [0.7 0.7]
Elastic Modulus - Zx (mm3):	I / y-max= 1251.7
Elastic Modulus - Zy (mm3):	J / x-max= 1251.7

AB6---ALUM. SERRATE WASHER | COATING --- N/A FINISHED

GRADE --- 6061 T6

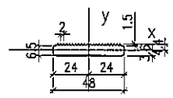

MASS PROPERTIES (UNIT)	VALUES
Area (mm2) :	343.7
Perimeter (mm) :	143.2
Bounding Box - X (mm):	-24.0 to 24.0
Bounding Box - Y (mm):	-3.6 to 4.4
Centroid - X (mm) :	0.0
Centroid - Y (mm) :	0.0
Moments of inertia - X (mm4) :	1509.7
Moments of inertia - Y (mm4) :	64737.2
Product of inertia - XY (mm4) :	0.0
Radii of gyration - X (mm) :	2.1
Radii of gyration - Y (mm) :	13.7
Principal moments along X-Y (mm4) :	1509.7 along [1.0 0.0]
Principal moments along Y-X (mm4) :	64737.2 along [0.0 1.0]
Elastic Modulus - Zx (mm3):	I / y-max= 344.2
Elastic Modulus - Zy (mm3):	J / x-max= 2697.4

AB7--- ALUM. ANGLE BRACKET | COATING --- N/A FINISHED

GRADE --- 6063 T5

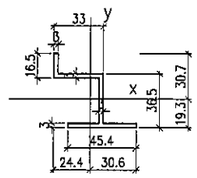

MASS PROPERTIES (UNIT)	VALUES
Area (mm2) :	367.2
Perimeter (mm) :	250.8
Bounding Box - X (mm):	-24.4 to 30.6
Bounding Box - Y (mm):	-19.3 to 30.7
Centroid - X (mm) :	0.0
Centroid - Y (mm) :	0.0
Moments of inertia - X (mm4) :	98770.4
Moments of inertia - Y (mm4) :	73005.2
Product of inertia - XY (mm4) :	-54327.9
Radii of gyration - X (mm) :	16.4
Radii of gyration - Y (mm) :	14.1
Principal moments along X-Y (mm4) :	30053.4 along [0.6 -0.8]
Principal moments along Y-X (mm4) :	141722.2 along [0.8 0.6]
Elastic Modulus - Zx (mm3):	I / y-max= 3218.4
Elastic Modulus - Zy (mm3):	J / x-max= 2389.2

AB8--- ALUMINIUM SLEEVE | COATING --- PVF2 COATING

GRADE --- 6061 T6

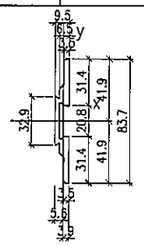

MASS PROPERTIES (UNIT)	VALUES
Area (mm2) :	383.3
Perimeter (mm) :	203.7
Bounding Box - X (mm):	-5.6 to 3.9
Bounding Box - Y (mm):	-41.9 to 41.9
Centroid - X (mm) :	0.0
Centroid - Y (mm) :	0.0
Moments of inertia - X (mm4) :	196853.9
Moments of inertia - Y (mm4) :	3047.6
Product of inertia - XY (mm4) :	0.1
Radii of gyration - X (mm) :	22.7
Radii of gyration - Y (mm) :	2.8
Principal moments along X-Y (mm4) :	3047.6 along [0.0 1.0]
Principal moments along Y-X (mm4) :	196853.9 along [-1.0 0.0]
Elastic Modulus - Zx (mm3):	I / y-max= 4703.4
Elastic Modulus - Zy (mm3):	J / x-max= 541.3

S23 --- ALUMINIUM CAPPING | COATING --- PVF2 COATING

GRADE --- 6063 T6

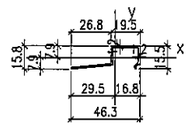

MASS PROPERTIES (UNIT)	VALUES
Area (mm2) :	81.3
Perimeter (mm) :	148.9
Bounding Box - X (mm):	-29.5 to 16.8
Bounding Box - Y (mm):	-7.9 to 7.9
Centroid - X (mm) :	0.0
Centroid - Y (mm) :	0.0
Moments of inertia - X (mm4) :	2714.0
Moments of inertia - Y (mm4) :	15005.0
Product of inertia - XY (mm4) :	3830.9
Radii of gyration - X (mm) :	5.8
Radii of gyration - Y (mm) :	13.6
Principal moments along X-Y (mm4) :	1617.7 along [1.0 0.3]
Principal moments along Y-X (mm4) :	16101.3 along [-0.3 1.0]
Elastic Modulus - Zx (mm3):	I / y-max= 342.4
Elastic Modulus - Zy (mm3):	J / x-max= 509.3

S24 --- ALUMINIUM CAPPING | COATING --- PVF2 COATING

GRADE --- 6063 T6

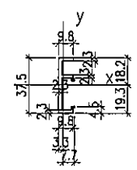

MASS PROPERTIES (UNIT)	VALUES
Area (mm2) :	144.4
Perimeter (mm) :	136.7
Bounding Box - X (mm):	-3.3 to 7.7
Bounding Box - Y (mm):	-19.3 to 18.2
Centroid - X (mm) :	0.0
Centroid - Y (mm) :	0.0
Moments of inertia - X (mm4) :	22312.0
Moments of inertia - Y (mm4) :	1332.5
Product of inertia - XY (mm4) :	106.1
Radii of gyration - X (mm) :	12.4
Radii of gyration - Y (mm) :	3.0
Principal moments along X-Y (mm4) :	1332.0 along [0.0 1.0]
Principal moments along Y-X (mm4) :	22312.5 along [-1.0 0.0]
Elastic Modulus - Zx (mm3):	I / y-max= 1157.9
Elastic Modulus - Zy (mm3):	J / x-max= 173.8

S25 --- ALUMINIUM FRAME | COATING --- PVF2 COATING

GRADE --- 6063 T6

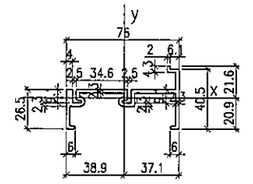

MASS PROPERTIES (UNIT)	VALUES
Area (mm2) :	450.0
Perimeter (mm) :	383.5
Bounding Box - X (mm):	-38.9 to 37.1
Bounding Box - Y (mm):	-20.9 to 21.6
Centroid - X (mm) :	0.0
Centroid - Y (mm) :	0.0
Moments of inertia - X (mm4) :	35329.1
Moments of inertia - Y (mm4) :	358824.1
Product of inertia - XY (mm4) :	29243.1
Radii of gyration - X (mm) :	8.9
Radii of gyration - Y (mm) :	28.2
Principal moments along X-Y (mm4) :	32706.9 along [1.0 0.1]
Principal moments along Y-X (mm4) :	361446.3 along [-0.1 1.0]
Elastic Modulus - Zx (mm3):	I / y-max= 1638.8
Elastic Modulus - Zy (mm3):	J / x-max= 9229.1

S26 --- ALUMINIUM FRAME | COATING --- PVF2 COATING

GRADE --- 6063 T6

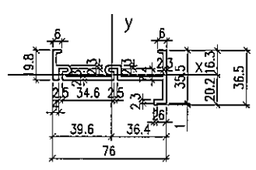

MASS PROPERTIES (UNIT)	VALUES
Area (mm2) :	407.4
Perimeter (mm) :	350.1
Bounding Box - X (mm):	-39.6 to 36.4
Bounding Box - Y (mm):	-20.2 to 16.3
Centroid - X (mm) :	0.0
Centroid - Y (mm) :	0.0
Moments of inertia - X (mm4) :	22371.1
Moments of inertia - Y (mm4) :	312330.4
Product of inertia - XY (mm4) :	-28556.2
Radii of gyration - X (mm) :	7.4
Radii of gyration - Y (mm) :	27.7
Principal moments along X-Y (mm4) :	19585.5 along [1.0 -0.1]
Principal moments along Y-X (mm4) :	315115.9 along [0.1 1.0]
Elastic Modulus - Zx (mm3):	I / y-max= 1105.2
Elastic Modulus - Zy (mm3):	J / x-max= 7877.7

A18 --- ALUM. WINDOW SASH | COATING --- PVF2 COATING

GRADE --- 6063 T6

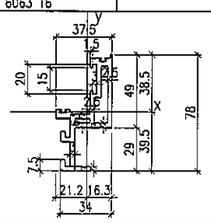

MASS PROPERTIES (UNIT)	VALUES
Area (mm2) :	620.5
Perimeter (mm) :	426.1
Bounding Box - X (mm):	-21.2 to 16.3
Bounding Box - Y (mm):	-39.5 to 38.5
Centroid - X (mm) :	0.0
Centroid - Y (mm) :	0.0
Moments of inertia - X (mm4) :	253671.5
Moments of inertia - Y (mm4) :	79636.7
Product of inertia - XY (mm4) :	97243.8
Radii of gyration - X (mm) :	20.2
Radii of gyration - Y (mm) :	11.3
Principal moments along X-Y (mm4) :	36161.2 along [0.4 0.9]
Principal moments along Y-X (mm4) :	297146.9 along [-0.9 0.4]
Elastic Modulus - Zx (mm3):	I / y-max= 6424.1
Elastic Modulus - Zy (mm3):	J / x-max= 3756.7

F06 --ALUMINIUM FRAME | COATING --- PVF2 COATING

GRADE --- 6063 T6

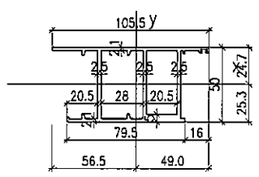

MASS PROPERTIES (UNIT)	VALUES
Area (mm2) :	817.9
Perimeter (mm) :	667.2
Bounding Box - X (mm):	-56.5 to 49.0
Bounding Box - Y (mm):	-25.3 to 24.7
Centroid - X (mm) :	0.0
Centroid - Y (mm) :	0.0
Moments of inertia - X (mm4) :	321201.0
Moments of inertia - Y (mm4) :	510627.5
Product of inertia - XY (mm4) :	-14435.7
Radii of gyration - X (mm) :	19.8
Radii of gyration - Y (mm) :	25.0
Principal moments along X-Y (mm4) :	321002.0 along [1.0 -0.1]
Principal moments along Y-X (mm4) :	511726.5 along [0.1 1.0]
Elastic Modulus - Zx (mm3):	I / y-max= 12746.6
Elastic Modulus - Zy (mm3):	J / x-max= 9032.0

S27 --- ALUMINIUM BAR | COATING --- PVF2 COATING

GRADE --- 6061 T6

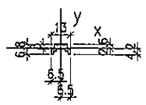

MASS PROPERTIES (UNIT)	VALUES
Area (mm2) :	43.6
Perimeter (mm) :	44.8
Bounding Box - X (mm):	-6.5 to 6.5
Bounding Box - Y (mm):	-4.2 to 2.6
Centroid - X (mm) :	0.0
Centroid - Y (mm) :	0.0
Moments of inertia - X (mm4) :	127.3
Moments of inertia - Y (mm4) :	631.4
Product of inertia - XY (mm4) :	0.0
Radii of gyration - X (mm) :	1.7
Radii of gyration - Y (mm) :	3.8
Principal moments along X-Y (mm4) :	127.3 along [1.0 0.0]
Principal moments along Y-X (mm4) :	631.4 along [0.0 1.0]
Elastic Modulus - Zx (mm3):	I / y-max= 30.6
Elastic Modulus - Zy (mm3):	J / x-max= 97.1

A21 --- ALUMINIUM CAP | COATING --- PVF2 COATING

GRADE --- 6061 T6

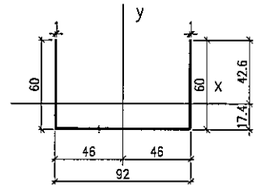

MASS PROPERTIES (UNIT)	VALUES
Area (mm2) :	209.6
Perimeter (mm) :	421.1
Bounding Box - X (mm):	-46.0 to 46.0
Bounding Box - Y (mm):	-17.4 to 42.6
Centroid - X (mm) :	0.0
Centroid - Y (mm) :	0.0
Moments of inertia - X (mm4) :	80636.9
Moments of inertia - Y (mm4) :	308290.6
Product of inertia - XY (mm4) :	0.0
Radii of gyration - X (mm) :	19.6
Radii of gyration - Y (mm) :	38.4
Principal moments along X-Y (mm4) :	80636.9 along [1.0 0.0]
Principal moments along Y-X (mm4) :	308290.6 along [0.0 1.0]
Elastic Modulus - Zx (mm3):	I / y-max= 1892.5
Elastic Modulus - Zy (mm3):	J / x-max= 6702.0

B.D. REF :

CLIENT :
信和置業有限公司
Sino Land Company Limited

ARCHITECT :
WONG TUNG & PARTNERS LIMITED
ARCHITECTS & PLANNERS

MAIN CONTRACTOR :
CR Construction Company Limited

STRUCTURAL ENGINEER :
AECOM

FACADE CONSULTANT:
AECOM

NOTE :
1. ALL DIMENSIONS ARE IN mm.
2. ALL ELEVATIONS ARE VIEWED FROM OUTSIDE.
3. ALL DIMENSIONS TO BE VERIFIED ON SITE BEFORE FABRICATION.

LEGEND :
- (X1 / XD01) — DETAIL MARK NO. / REFER SHEET NO.
1. F.F.L. --FINISHED FLOOR LEVEL
2. S.F.L. --STRUCTURAL FLOOR LEVEL
3. (/R) --REVERSED DETAIL

NO.	DATE	REVISED	BY
C	28/01/2019	GENERAL REVISED	
B	22/12/2018	GENERAL REVISED	
A	25/11/2018	GENERAL REVISED	

JOB NO. : J-837

PROJECT :
URA KWUN TONG TOWN CENTRE REDEVELOPMENT (AREA 2 & 3) AT NKIL 6514, KWUN TONG, KWLOON

TITLE :
TYPICAL MULLION DETAIL FOR CURTAIN WALL

DATE : 10-SEP-18 | SCALE : 1:2 (A1)

DRAWN BY : ASING | CHECKED BY : -

美特鋁質有限公司
MIDI ALUMINIUM FABRICATOR LTD.
Units 6-8, Sunray Industrial Centre, 1/F
610 Cha Kwo Ling Road, Kowloon
Tel:23489211-4 Fax:(852)27727666

DWG NO. : J837-CW-ML05 | REV. : C

Z01--- ALUMINIUM FRAME | COATING --- PVF2 COATING

GRADE --- 6063 T5

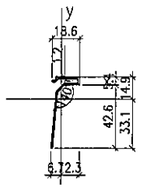

MASS PROPERTIES (UNIT)	VALUES
Area (mm²) :	83.0
Perimeter (mm) :	158.4
Bounding Box – X (mm):	-6.7 to 12.3
Bounding Box – Y (mm):	-33.1 to 14.9
Centroid – X (mm) :	0.0
Centroid – Y (mm) :	0.0
Moments of inertia – X (mm⁴) :	18694.5
Moments of inertia – Y (mm⁴) :	2804.5
Product of inertia – XY (mm⁴) :	5057.0
Radii of gyration – X (mm) :	15.0
Radii of gyration – Y (mm) :	5.8
Principal moments along X–Y (mm⁴) :	1331.7 along [0.3 1.0]
Principal moments along Y–X (mm⁴) :	20167.4 along [-1.0 0.3]
Elastic Modulus – Zx (mm³):	I / y-max= 565.0
Elastic Modulus – Zy (mm³):	J / x-max= 228.7

Z02 --ALUMINIUM DOOR FRAME | COATING --- PVF2 COATING

GRADE --- 6063 T6

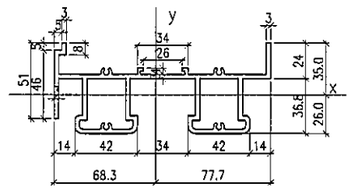

MASS PROPERTIES (UNIT)	VALUES
Area (mm²) :	1436.0
Perimeter (mm) :	980.1
Bounding Box – X (mm):	-68.3 to 77.7
Bounding Box – Y (mm):	-26.0 to 35.0
Centroid – X (mm) :	0.0
Centroid – Y (mm) :	0.0
Moments of inertia – X (mm⁴) :	399402.5
Moments of inertia – Y (mm⁴) :	3096515.2
Product of inertia – XY (mm⁴) :	-11940.5
Radii of gyration – X (mm) :	16.7
Radii of gyration – Y (mm) :	46.4
Principal moments along X–Y (mm⁴) :	399349.7 along [1.0 0.0]
Principal moments along Y–X (mm⁴) :	3096568.0 along [0.0 1.0]
Elastic Modulus – Zx (mm³):	I / y-max= 11411.5
Elastic Modulus – Zy (mm³):	J / x-max= 39859.3

Z03--- ALUMINIUM FRAME | COATING --- PVF2 COATING

GRADE --- 6063 T6

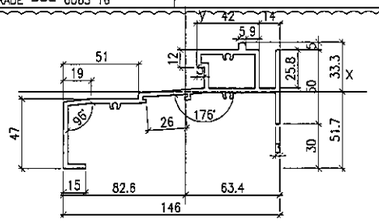

MASS PROPERTIES (UNIT)	VALUES
Area (mm²) :	1110.0
Perimeter (mm) :	753.1
Bounding Box – X (mm):	-82.6 to 63.4
Bounding Box – Y (mm):	-51.7 to 33.3
Centroid – X (mm) :	0.0
Centroid – Y (mm) :	0.0
Moments of inertia – X (mm⁴) :	425129.7
Moments of inertia – Y (mm⁴) :	2771143.0
Product of inertia – XY (mm⁴) :	738703.4
Radii of gyration – X (mm) :	19.6
Radii of gyration – Y (mm) :	50.0
Principal moments along X–Y (mm⁴) :	211908.6 along [1.0 0.3]
Principal moments along Y–X (mm⁴) :	2984364.0 along [-0.3 1.0]
Elastic Modulus – Zx (mm³):	I / y-max= 8219.1
Elastic Modulus – Zy (mm³):	J / x-max= 33563.8

Z04 --- ALUMINIUM ADAPTER | COATING --- PVF2 COATING

GRADE --- 6063 T6

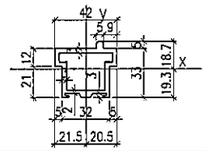

MASS PROPERTIES (UNIT)	VALUES
Area (mm²) :	433.1
Perimeter (mm) :	298.0
Bounding Box – X (mm):	-21.5 to 20.5
Bounding Box – Y (mm):	-19.3 to 18.7
Centroid – X (mm) :	0.0
Centroid – Y (mm) :	0.0
Moments of inertia – X (mm⁴) :	61303.9
Moments of inertia – Y (mm⁴) :	77707.7
Product of inertia – XY (mm⁴) :	3385.8
Radii of gyration – X (mm) :	11.9
Radii of gyration – Y (mm) :	13.4
Principal moments along X–Y (mm⁴) :	60632.5 along [1.0 0.2]
Principal moments along Y–X (mm⁴) :	78379.0 along [-0.2 1.0]
Elastic Modulus – Zx (mm³):	I / y-max= 3176.8
Elastic Modulus – Zy (mm³):	J / x-max= 3616.1

Z05 --- ALUMINIUM ADAPTER | COATING --- PVF2 COATING

GRADE --- 6063 T6

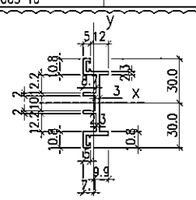

MASS PROPERTIES (UNIT)	VALUES
Area (mm²) :	256.9
Perimeter (mm) :	240.2
Bounding Box – X (mm):	-7.1 to 9.9
Bounding Box – Y (mm):	-30.0 to 30.0
Centroid – X (mm) :	0.0
Centroid – Y (mm) :	0.0
Moments of inertia – X (mm⁴) :	78744.2
Moments of inertia – Y (mm⁴) :	4673.4
Product of inertia – XY (mm⁴) :	0.0
Radii of gyration – X (mm) :	17.5
Radii of gyration – Y (mm) :	4.3
Principal moments along X–Y (mm⁴) :	4673.4 along [0.0 1.0]
Principal moments along Y–X (mm⁴) :	78744.2 along [-1.0 0.0]
Elastic Modulus – Zx (mm³):	I / y-max= 2624.8
Elastic Modulus – Zy (mm³):	J / x-max= 473.8

Z06 ---ALUMINIUM DOOR SASH | COATING --- PVF2 COATING

GRADE --- 6063 T6

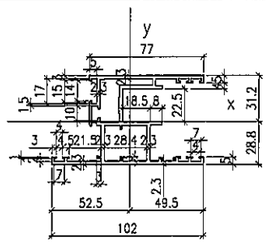

MASS PROPERTIES (UNIT)	VALUES
Area (mm²) :	890.7
Perimeter (mm) :	852.4
Bounding Box – X (mm):	-52.5 to 49.5
Bounding Box – Y (mm):	-28.8 to 31.2
Centroid – X (mm) :	0.0
Centroid – Y (mm) :	0.0
Moments of inertia – X (mm⁴) :	472857.2
Moments of inertia – Y (mm⁴) :	489265.1
Product of inertia – XY (mm⁴) :	70558.1
Radii of gyration – X (mm) :	23.0
Radii of gyration – Y (mm) :	23.4
Principal moments along X–Y (mm⁴) :	410027.7 along [0.7 0.7]
Principal moments along Y–X (mm⁴) :	552094.6 along [-0.7 0.7]
Elastic Modulus – Zx (mm³):	I / y-max= 9326.3
Elastic Modulus – Zy (mm³):	J / x-max= 15166.8

Z07 --- ALUMINIUM ADAPTER | COATING --- PVF2 COATING

GRADE --- 6063 T6

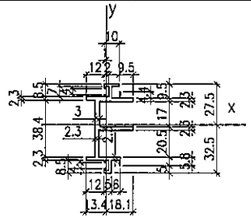

MASS PROPERTIES (UNIT)	VALUES
Area (mm²) :	351.0
Perimeter (mm) :	317.8
Bounding Box – X (mm):	-13.4 to 18.1
Bounding Box – Y (mm):	-32.5 to 27.5
Centroid – X (mm) :	0.0
Centroid – Y (mm) :	0.0
Moments of inertia – X (mm⁴) :	108319.6
Moments of inertia – Y (mm⁴) :	18552.3
Product of inertia – XY (mm⁴) :	6061.8
Radii of gyration – X (mm) :	17.6
Radii of gyration – Y (mm) :	7.3
Principal moments along X–Y (mm⁴) :	18144.8 along [0.1 1.0]
Principal moments along Y–X (mm⁴) :	108727.1 along [-1.0 0.1]
Elastic Modulus – Zx (mm³):	I / y-max= 3332.4
Elastic Modulus – Zy (mm³):	J / x-max= 1025.6

Z08--- ALUMINIUM ADAPTER | COATING --- PVF2 COATING

GRADE --- 6063 T6

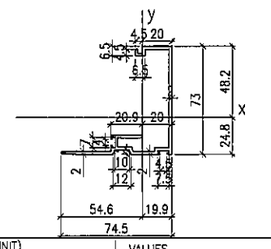

MASS PROPERTIES (UNIT)	VALUES
Area (mm²) :	410.1
Perimeter (mm) :	433.0
Bounding Box – X (mm):	-54.6 to 19.9
Bounding Box – Y (mm):	-24.8 to 48.2
Centroid – X (mm) :	0.0
Centroid – Y (mm) :	0.0
Moments of inertia – X (mm⁴) :	295765.9
Moments of inertia – Y (mm⁴) :	166387.4
Product of inertia – XY (mm⁴) :	111909.6
Radii of gyration – X (mm) :	26.9
Radii of gyration – Y (mm) :	20.1
Principal moments along X–Y (mm⁴) :	101815.4 along [0.5 0.9]
Principal moments along Y–X (mm⁴) :	360337.9 along [-0.9 0.5]
Elastic Modulus – Zx (mm³):	I / y-max= 6134.4
Elastic Modulus – Zy (mm³):	J / x-max= 3044.7

Z09--- ALUMINIUM FRAME | COATING --- N/A FINISHED

GRADE --- 6063 T5

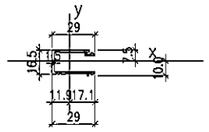

MASS PROPERTIES (UNIT)	VALUES
Area (mm²) :	101.9
Perimeter (mm) :	158.6
Bounding Box – X (mm):	-11.9 to 17.1
Bounding Box – Y (mm):	-10.0 to 7.5
Centroid – X (mm) :	0.0
Centroid – Y (mm) :	0.0
Moments of inertia – X (mm⁴) :	4520.6
Moments of inertia – Y (mm⁴) :	9044.8
Product of inertia – XY (mm⁴) :	185.0
Radii of gyration – X (mm) :	6.7
Radii of gyration – Y (mm) :	9.4
Principal moments along X–Y (mm⁴) :	4513.0 along [1.0 0.0]
Principal moments along Y–X (mm⁴) :	9052.3 along [0.0 1.0]
Elastic Modulus – Zx (mm³):	I / y-max= 453.8
Elastic Modulus – Zy (mm³):	J / x-max= 529.5

Z10---ALUMINIUM FRAME | COATING --- PVF2 COATING

GRADE --- 6063 T6

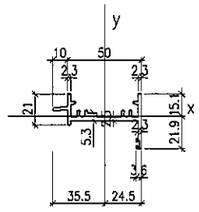

MASS PROPERTIES (UNIT)	VALUES
Area (mm²) :	331.5
Perimeter (mm) :	279.7
Bounding Box – X (mm):	-35.5 to 24.5
Bounding Box – Y (mm):	-21.9 to 15.1
Centroid – X (mm) :	0.0
Centroid – Y (mm) :	0.0
Moments of inertia – X (mm⁴) :	15939.6
Moments of inertia – Y (mm⁴) :	127742.4
Product of inertia – XY (mm⁴) :	-15797.0
Radii of gyration – X (mm) :	6.9
Radii of gyration – Y (mm) :	19.6
Principal moments along X–Y (mm⁴) :	13750.5 along [1.0 -0.1]
Principal moments along Y–X (mm⁴) :	129931.5 along [0.1 1.0]
Elastic Modulus – Zx (mm³):	I / y-max= 726.8
Elastic Modulus – Zy (mm³):	J / x-max= 3596.6

Z11 --- ALUMINIUM FRAME | COATING --- PVF2 COATING

GRADE --- 6063 T6

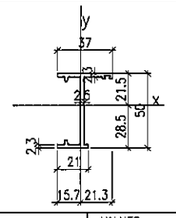

MASS PROPERTIES (UNIT)	VALUES
Area (mm²) :	259.2
Perimeter (mm) :	229.7
Bounding Box – X (mm):	-15.7 to 21.3
Bounding Box – Y (mm):	-28.5 to 21.5
Centroid – X (mm) :	0.0
Centroid – Y (mm) :	0.0
Moments of inertia – X (mm⁴) :	97631.2
Moments of inertia – Y (mm⁴) :	15103.8
Product of inertia – XY (mm⁴) :	12020.3
Radii of gyration – X (mm) :	19.4
Radii of gyration – Y (mm) :	7.6
Principal moments along X–Y (mm⁴) :	13388.6 along [0.1 1.0]
Principal moments along Y–X (mm⁴) :	99346.3 along [-1.0 0.1]
Elastic Modulus – Zx (mm³):	I / y-max= 3425.4
Elastic Modulus – Zy (mm³):	J / x-max= 710.7

Z12 --- ALUMINIUM FRAME | COATING --- PVF2 COATING

GRADE --- 6063 T6

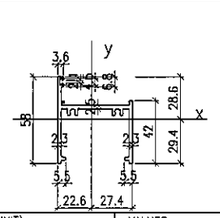

MASS PROPERTIES (UNIT)	VALUES
Area (mm²) :	392.4
Perimeter (mm) :	348.4
Bounding Box – X (mm):	-22.6 to 27.4
Bounding Box – Y (mm):	-29.4 to 28.6
Centroid – X (mm) :	0.0
Centroid – Y (mm) :	0.0
Moments of inertia – X (mm⁴) :	76284.5
Moments of inertia – Y (mm⁴) :	162456.9
Product of inertia – XY (mm⁴) :	-19283.7
Radii of gyration – X (mm) :	13.9
Radii of gyration – Y (mm) :	20.3
Principal moments along X–Y (mm⁴) :	72166.1 along [1.0 -0.2]
Principal moments along Y–X (mm⁴) :	166575.3 along [0.2 1.0]
Elastic Modulus – Zx (mm³):	I / y-max= 2593.9
Elastic Modulus – Zy (mm³):	J / x-max= 5922.4

Z13 --- ALUMINIUM FRAME | COATING --- N/A FINISHED

GRADE --- 6063 T6

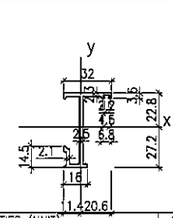

MASS PROPERTIES (UNIT)	VALUES
Area (mm²) :	254.0
Perimeter (mm) :	227.3
Bounding Box – X (mm):	-11.4 to 20.6
Bounding Box – Y (mm):	-27.2 to 22.8
Centroid – X (mm) :	0.0
Centroid – Y (mm) :	0.0
Moments of inertia – X (mm⁴) :	89284.3
Moments of inertia – Y (mm⁴) :	11809.4
Product of inertia – XY (mm⁴) :	14236.2
Radii of gyration – X (mm) :	18.7
Radii of gyration – Y (mm) :	6.8
Principal moments along X–Y (mm⁴) :	9276.3 along [0.2 1.0]
Principal moments along Y–X (mm⁴) :	91817.5 along [-1.0 0.2]
Elastic Modulus – Zx (mm³):	I / y-max= 3282.4
Elastic Modulus – Zy (mm³):	J / x-max= 574.3

Z14 ---- ALUMINIUM FRAME | COATING --- PVF2 COATING

GRADE ---- 6063 T5

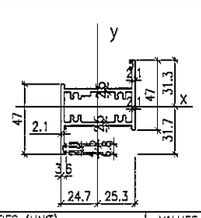

MASS PROPERTIES (UNIT)	VALUES
Area (mm²) :	517.8
Perimeter (mm) :	453.5
Bounding Box – X (mm):	-24.7 to 25.3
Bounding Box – Y (mm):	-31.7 to 31.3
Centroid – X (mm) :	0.0
Centroid – Y (mm) :	0.0
Moments of inertia – X (mm⁴) :	88026.5
Moments of inertia – Y (mm⁴) :	173305.3
Product of inertia – XY (mm⁴) :	39895.2
Radii of gyration – X (mm) :	13.0
Radii of gyration – Y (mm) :	18.3
Principal moments along X–Y (mm⁴) :	72272.8 along [0.9 0.4]
Principal moments along Y–X (mm⁴) :	189058.9 along [-0.4 0.9]
Elastic Modulus – Zx (mm³):	I / y-max= 2773.7
Elastic Modulus – Zy (mm³):	J / x-max= 6844.5

Z15 ---ALUMINIUM DOOR SASH | COATING --- PVF2 COATING

GRADE --- 6063 T6

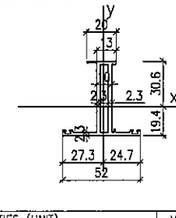

MASS PROPERTIES (UNIT)	VALUES
Area (mm²) :	389.2
Perimeter (mm) :	348.0
Bounding Box – X (mm):	-27.3 to 24.7
Bounding Box – Y (mm):	-19.4 to 30.6
Centroid – X (mm) :	0.0
Centroid – Y (mm) :	0.0
Moments of inertia – X (mm⁴) :	114990.8
Moments of inertia – Y (mm⁴) :	32732.4
Product of inertia – XY (mm⁴) :	3686.7
Radii of gyration – X (mm) :	17.6
Radii of gyration – Y (mm) :	9.4
Principal moments along X–Y (mm⁴) :	32567.5 along [0.0 1.0]
Principal moments along Y–X (mm⁴) :	115155.7 along [-1.0 0.0]
Elastic Modulus – Zx (mm³):	I / y-max= 3758.4
Elastic Modulus – Zy (mm³):	J / x-max= 1197.5

B.D. REF :

CLIENT :
信和置業有限公司
Sino Land Company Limited

ARCHITECT :
WONG TUNG & PARTNERS LIMITED
ARCHITECTS & PLANNERS

MAIN CONTRACTOR :
CR Construction Company Limited

STRUCTURAL ENGINEER :
AECOM

FACADE CONSULTANT:
AECOM

NOTE :
1. ALL DIMENSIONS ARE IN mm.
2. ALL ELEVATIONS ARE VIEWED FROM OUTSIDE.
3. ALL DIMENSIONS TO BE VERIFIED ON SITE BEFORE FABRICATION.

LEGEND :
X1 / X001 — DETAIL MARK NO. / REFER SHEET NO.
1. F.F.L. --FINISHED FLOOR LEVEL
2. S.F.L. --STRUCTURAL FLOOR LEVEL
3. (Y/R) --REVERSED DETAIL

NO.	DATE	REVISED	BY
A	16/07/2019	GENERAL REVISED	

JOB NO. : J-837

PROJECT :
URA KWUN TONG TOWN CENTRE REDEVELOPMENT (AREA 2 & 3) AT NKIL 6514, KWUN TONG, KWLOON

TITLE :
TYPICAL MULLION DETAIL FOR CURTAIN WALL

DATE : 21-FEB-19 | SCALE : 1:2 (A1)

DRAWN BY : ASING | CHECKED BY : --

美特鋁質有限公司
MIDI ALUMINIUM FABRICATOR LTD.
Units 6-8, Sunray Industrial Centre, 1/F
610 Cha Kwo Ling Road, Kowloon
Tel:23489211-4 Fax:(852)27727666

DWG NO. : J837-CW-ML06 | REV. : A

Z16--- ALUMINIUM FRAME	COATING --- PVF2 COATING
GRADE --- 6063 T6	

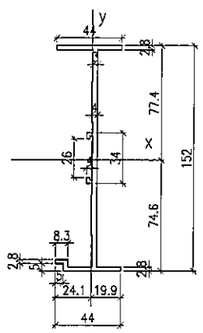

MASS PROPERTIES (UNIT)	VALUES
Area (mm2) :	775.3
Perimeter (mm) :	510.5
Bounding Box - X (mm):	-24.1 to 19.9
Bounding Box - Y (mm):	-74.6 to 77.4
Centroid - X (mm) :	0.0
Centroid - Y (mm) :	0.0
Moments of inertia - X (mm4) :	2290039.9
Moments of inertia - Y (mm4) :	47126.6
Product of inertia - XY (mm4) :	18594.1
Radii of gyration - X (mm) :	54.4
Radii of gyration - Y (mm) :	7.8
Principal moments along X-Y (mm4) :	46972.4 along [0.0 1.0]
Principal moments along Y-X (mm4) :	2290194.0 along [-1.0 0.0]
Elastic Modulus - Zx (mm3):	I / y-max= 29589.3
Elastic Modulus - Zy (mm3):	J / x-max= 1956.3

Z17--- ALUMINIUM FRAME	COATING --- PVF2 COATING
GRADE --- 6063 T6	

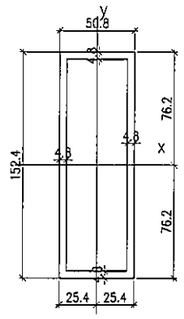

MASS PROPERTIES (UNIT)	VALUES
Area (mm2) :	1851.1
Perimeter (mm) :	773.2
Bounding Box - X (mm):	-25.4 to 25.4
Bounding Box - Y (mm):	-76.2 to 76.2
Centroid - X (mm) :	0.0
Centroid - Y (mm) :	0.0
Moments of inertia - X (mm4) :	4967652.4
Moments of inertia - Y (mm4) :	829940.1
Product of inertia - XY (mm4) :	0.0
Radii of gyration - X (mm) :	51.8
Radii of gyration - Y (mm) :	21.2
Principal moments along X-Y (mm4) :	829940.1 along [0.0 1.0]
Principal moments along Y-X (mm4) :	4967652.4 along [-1.0 0.0]
Elastic Modulus - Zx (mm3):	I / y-max= 65192.3
Elastic Modulus - Zy (mm3):	J / x-max= 32674.8

B.D. REF :

CLIENT :
信和置業有限公司
Sino Land Company Limited

ARCHITECT :
WONG TUNG & PARTNERS LIMITED
ARCHITECTS & PLANNERS

MAIN CONTRACTOR :
CR Construction Company Limited

STRUCTURAL ENGINEER :
AECOM

FACADE CONSULTANT:
AECOM

NOTE :
1. ALL DIMENSIONS ARE IN mm.
2. ALL ELEVATIONS ARE VIEWED FROM OUTSIDE.
3. ALL DIMENSIONS TO BE VERIFIED ON SITE BEFORE FABRICATION.

LEGEND :
- x1 / x001 — DETAIL MARK NO. / REFER SHEET NO.
1. F.F.L. --FINISHED FLOOR LEVEL
2. S.F.L. --STRUCTURAL FLOOR LEVEL
3. (/P) --REVERSED DETAIL

NO.	DATE	REVISED	BY
A	16/07/2019	GENERAL REVISED	

JOB NO. : J-837

PROJECT :
URA KWUN TONG TOWN CENTRE REDEVELOPMENT (AREA 2 & 3) AT NKIL 6514, KWUN TONG, KWLOON

TITLE :
TYPICAL MULLION DETAIL FOR CURTAIN WALL

DATE : 21-FEB-19 | SCALE : 1:2 (A1)

DRAWN BY : ASING | CHECKED BY : -

美特鋁質有限公司
MIDI ALUMINIUM FABRICATOR LTD.
Units 6-8, Sunray Industrial Centre, 1/F
610 Cha Kwo Ling Road, Kowloon
Tel:23489211-4 Fax:(852)27727666

DWG NO. : JB37-CW-ML07 | REV. : A

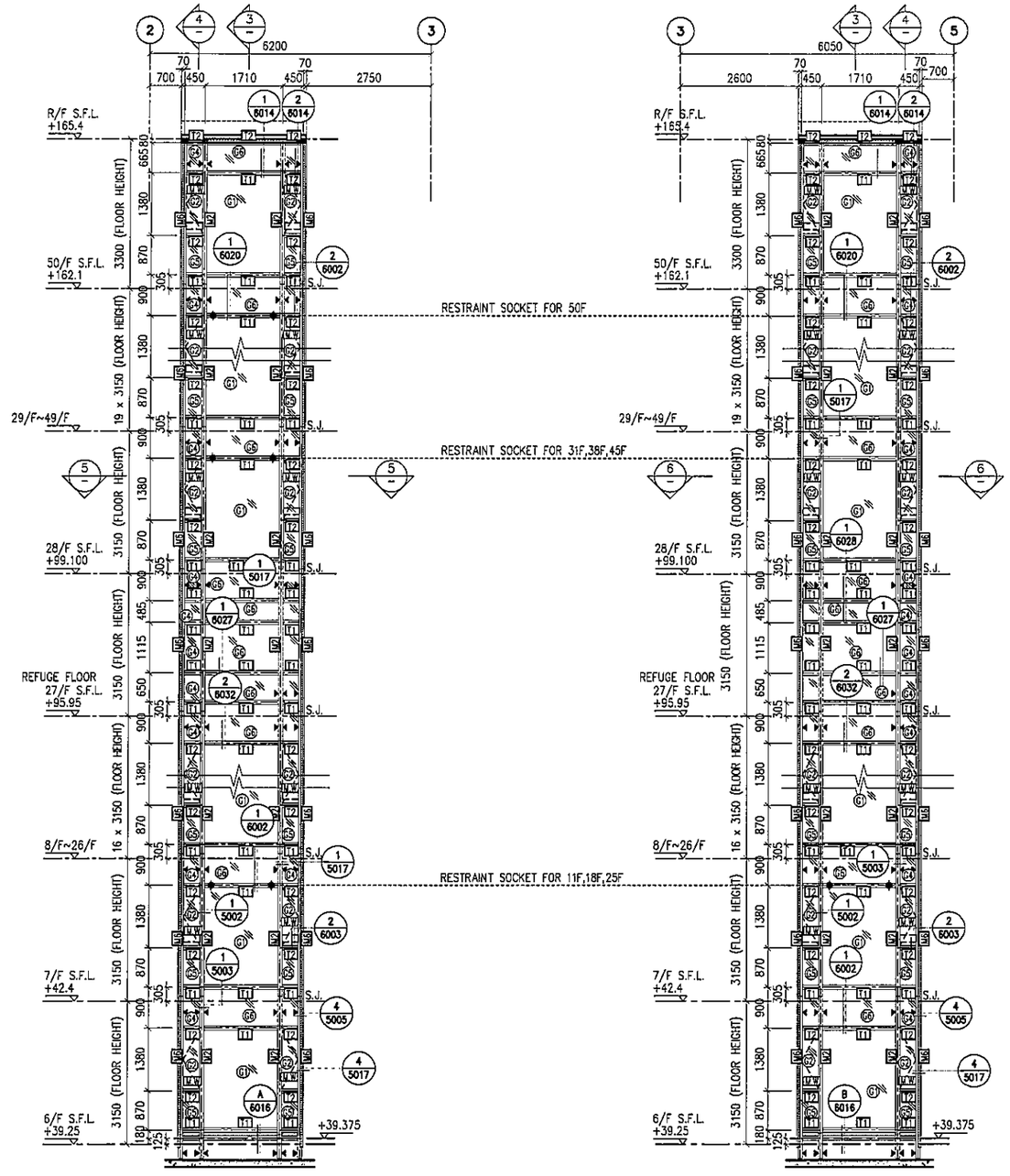

1 / – PART ELEVATION FOR CURTAIN WALL

2 / – PART ELEVATION FOR CURTAIN WALL

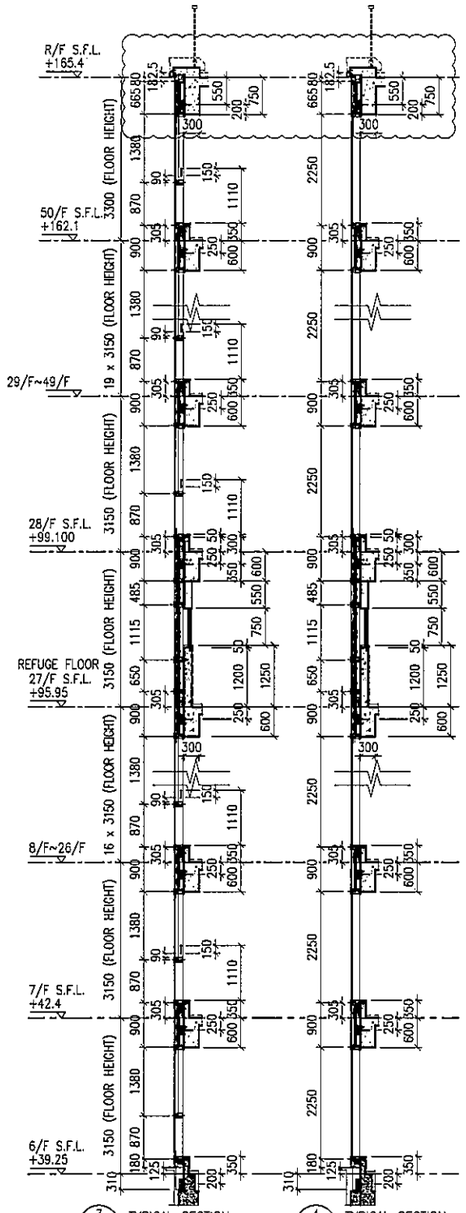

3 / – TYPICAL SECTION FOR CURTAIN WALL

4 / – TYPICAL SECTION FOR CURTAIN WALL

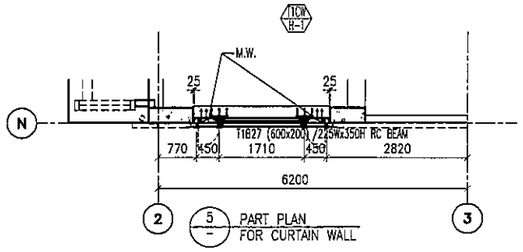

5 / – PART PLAN FOR CURTAIN WALL

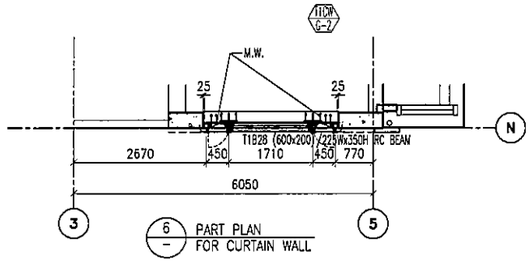

6 / – PART PLAN FOR CURTAIN WALL

LEGEND:

- 10 mm THK. TEMPERED BLUE TINTED GLASS (OUTER) + 9 mm AIR SPACE + 8 mm THK. TEMPERED CLEAR GLASS (INNER)
- 8 mm THK. HEAT STRENGTHENED TINTED GLASS (OUTER)+ 9 mm AIR SPACE + 8 mm THK. HEAT STRENGTHENED CLEAR GLASS (INNER)
- 10 mm THK. HEAT STRENGTHENED BLUE TINTED GLASS (OUTER)+ 9 mm AIR SPACE + 8 mm THK. TEMPERED CLEAR GLASS (INNER)
- 8 mm THK. HEAT STRENGTHENED BLUE TINTED GLASS (SPANDREL GLASS)
- 8 mm THK. HEAT STRENGTHENED BLUE TINTED GLASS (OUTER)+ 9 mm AIR SPACE + 8 mm THK. TEMPERED CLEAR GLASS (INNER)
- 8 mm THK. TEMPERED BLUE TINTED GLASS (SPANDREL GLASS)
- 8 mm THK. HEAT STRENGTHENED TINTED GLASS (OUTER)+ 1.52PVB + 8 mm THK. HEAT STRENGTHENED CLEAR LAMINATED GLASS (INNER)
- 10 mm THK. TEMPERED GLASS (INTERNAL PROTECTIVE BARRIER)
- 3 mm THK. ALUM. CLADDING
- M.W. – MAINTENANCE WINDOW
- S.J. – STACK JOINT
- AF-01 – ALUM. EXTRUSION DIE NO.
- ▲ – SUPPORT POINT
- ◆ – RESTRAINT SOCKET

B.D. REF :

CLIENT :
信和置業有限公司
Sino Land Company Limited

ARCHITECT :
WONG TUNG & PARTNERS LIMITED
ARCHITECTS & PLANNERS

MAIN CONTRACTOR :
CR Construction Company Limited

STRUCTURAL ENGINEER :
AECOM

FACADE CONSULTANT:
AECOM

NOTE :
1. ALL DIMENSIONS ARE IN mm.
2. ALL ELEVATIONS ARE VIEWED FROM OUTSIDE.
3. ALL DIMENSIONS TO BE VERIFIED ON SITE BEFORE FABRICATION.

LEGEND :
X1 / X001 — DETAIL MARK NO. / REFER SHEET NO.
1. F.F.L. – FINISHED FLOOR LEVEL
2. S.F.L. – STRUCTURAL FLOOR LEVEL
3. /R – REVERSED DETAIL

NO.	DATE	REVISED	BY
F	16/07/2019	GENERAL REVISED	
E	17/01/2019	GENERAL REVISED	
D	22/12/2018	GENERAL REVISED	
C	04/12/2018	GENERAL REVISED	
B	24/11/2018	GENERAL REVISED	
A	10/9/2018	GENERAL REVISED	

JOB NO. : J-837

PROJECT :
URA KWUN TONG TOWN CENTRE REDEVELOPMENT (AREA 2 & 3) AT NKIL 6514, KWUN TONG, KWLOON

TITLE :
PART ELEVATION OF CURTAIN WALL AT TOWER 1

DATE : 04-JUL-18 | SCALE : 1:50 (A1)

DRAWN BY : ASING | CHECKED BY : –

美特鋁質有限公司
MIDI ALUMINIUM FABRICATOR LTD.
Units 6-8, Sunray Industrial Centre, 1/F
610 Cha Kwo Ling Road, Kowloon
Tel:23489211-4 Fax:(852)27727666

DWG NO. : J837-CW-2101 | REV. : F

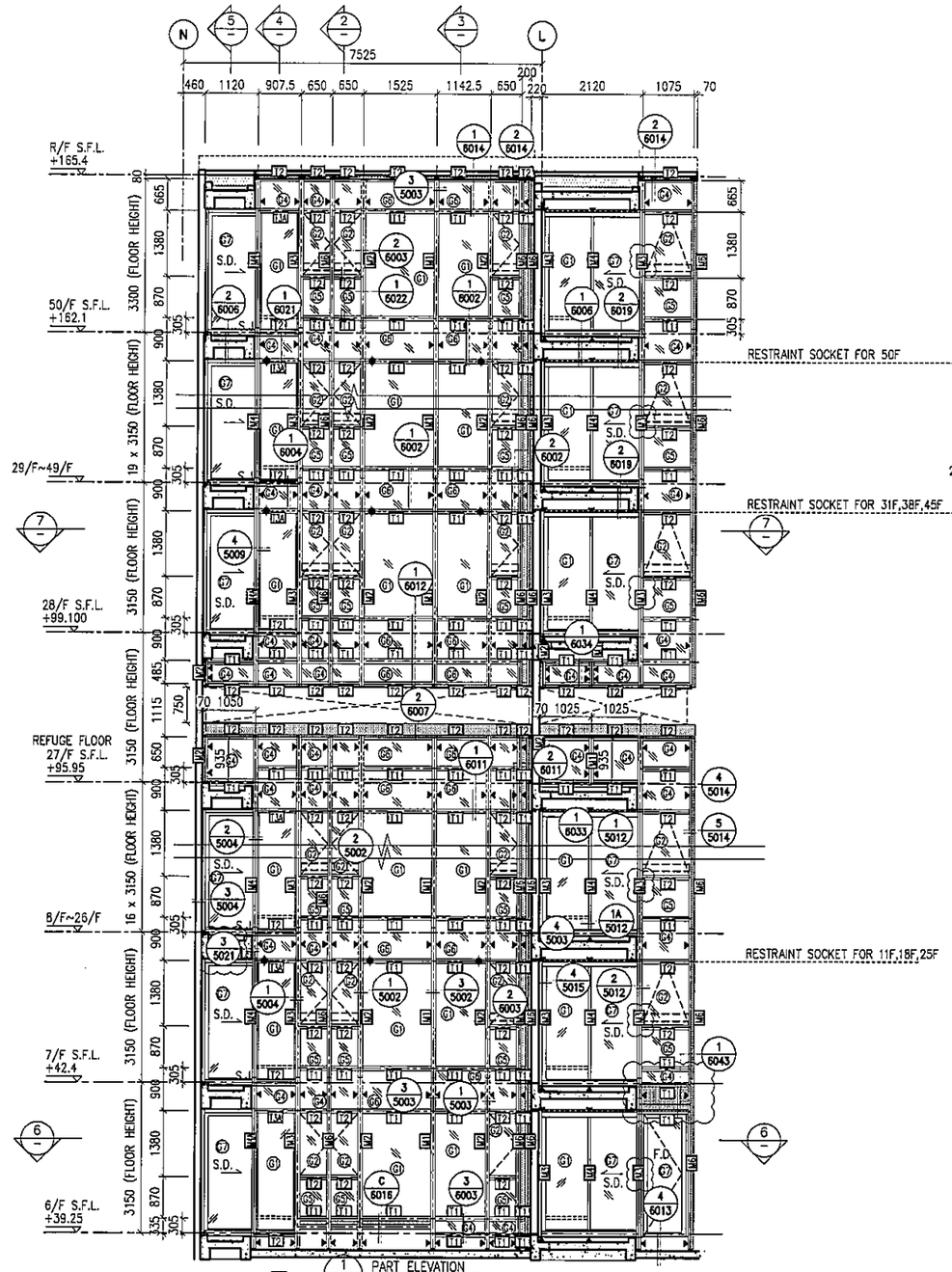

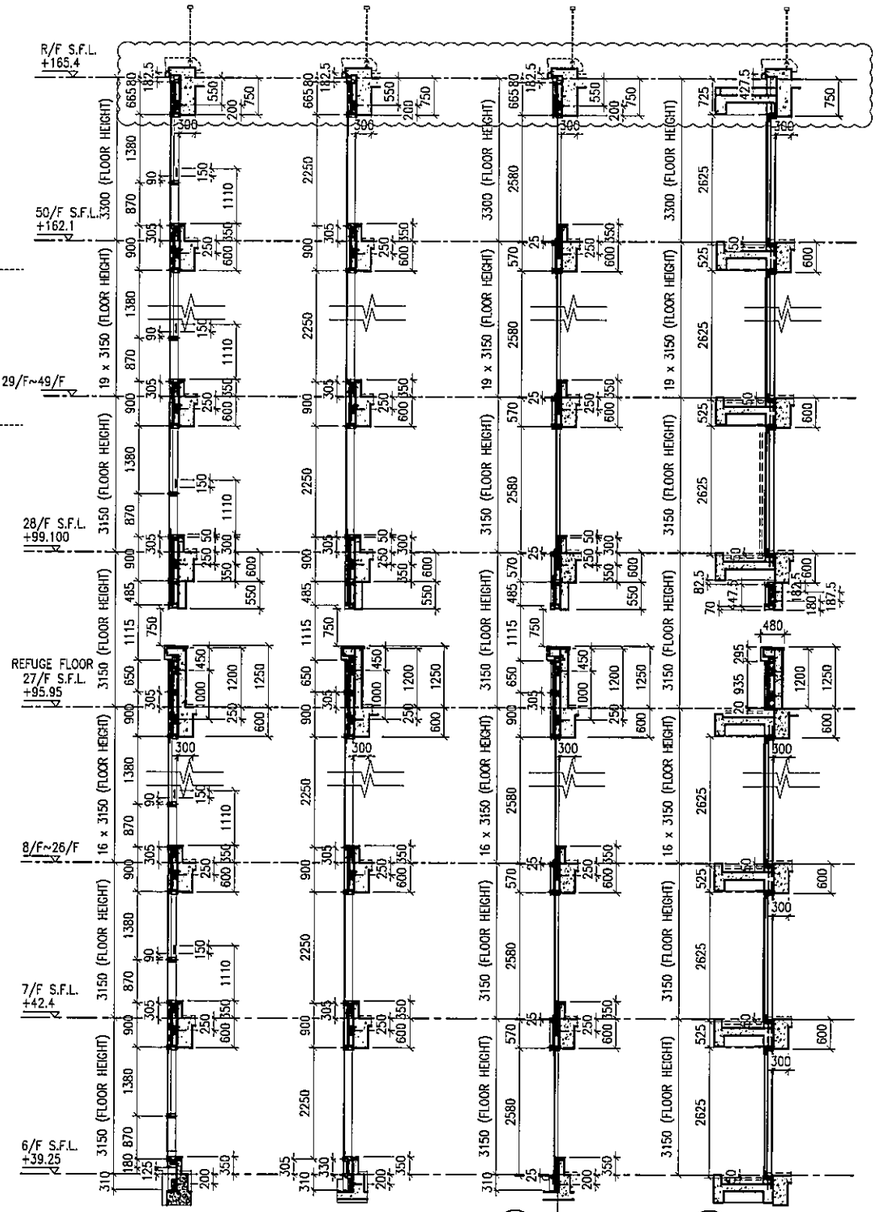

2 TYPICAL SECTION FOR CURTAIN WALL

3 TYPICAL SECTION FOR CURTAIN WALL

4 TYPICAL SECTION FOR CURTAIN WALL

5 TYPICAL SECTION FOR CURTAIN WALL

1 PART ELEVATION FOR CURTAIN WALL

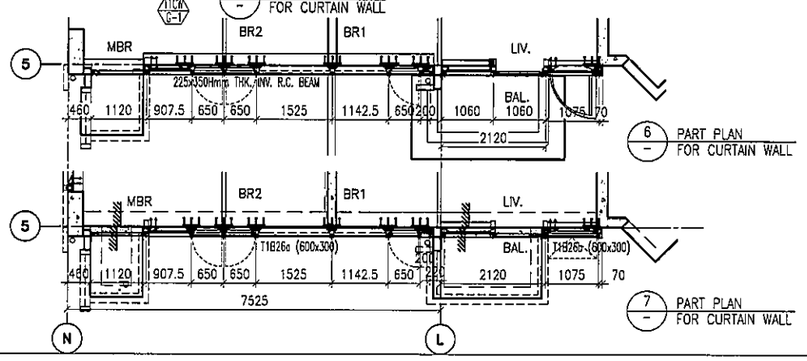

6 PART PLAN FOR CURTAIN WALL

7 PART PLAN FOR CURTAIN WALL

LEGEND:

- 10 mm THK. TEMPERED BLUE TINTED GLASS (OUTER) + 9 mm AIR SPACE + 8 mm THK. TEMPERED CLEAR GLASS (INNER)
- 8 mm THK. HEAT STRENGTHENED TINTED GLASS (OUTER)+ 9 mm AIR SPACE + 8 mm THK. HEAT STRENGTHENED CLEAR GLASS (INNER)
- 10 mm THK. HEAT STRENGTHENED BLUE TINTED GLASS (OUTER)+ 9 mm AIR SPACE + 8 mm THK. TEMPERED CLEAR GLASS (INNER)
- 8 mm THK. HEAT STRENGTHENED BLUE TINTED GLASS (SPANDREL GLASS)
- 8 mm THK. HEAT STRENGTHENED BLUE TINTED GLASS (OUTER)+ 9 mm AIR SPACE + 8 mm THK. TEMPERED CLEAR GLASS (INNER)
- 8 mm THK. TEMPERED BLUE TINTED GLASS (SPANDREL GLASS)
- 8 mm THK. HEAT STRENGTHENED TINTED GLASS (OUTER)+ 1.52PVB + 8 mm THK. HEAT STRENGTHENED CLEAR LAMINATED GLASS (INNER)
- 10 mm THK. TEMPERED GLASS (INTERNAL PROTECTIVE BARRIER)
- 3 mm THK. ALUM. CLADDING
- M.W. – MAINTENANCE WINDOW
- S.J. – STACK JOINT
- AE01 – ALUM. EXTRUSION DIE NO.
- ▲ – SUPPORT POINT
- ✦ – RESTRAINT SOCKET

B.D. REF :

CLIENT :
信和置業有限公司
Sino Land Company Limited

ARCHITECT :
WONG TUNG & PARTNERS LIMITED
ARCHITECTS & PLANNERS

MAIN CONTRACTOR :
CR Construction Company Limited

STRUCTURAL ENGINEER :
AECOM

FACADE CONSULTANT:
AECOM

NOTE :
1. ALL DIMENSIONS ARE IN mm.
2. ALL ELEVATIONS ARE VIEWED FROM OUTSIDE.
3. ALL DIMENSIONS TO BE VERIFIED ON SITE BEFORE FABRICATION.

LEGEND :
- (X1 / XC01) — DETAIL MARK NO. / REFER SHEET NO.
1. F.F.L. --FINISHED FLOOR LEVEL
2. S.F.L. --STRUCTURAL FLOOR LEVEL
3. (/R) --REVERSED DETAIL

NO.	DATE	REVISED	BY
G	16/07/2019	GENERAL REVISED	
F	12/05/2019	GENERAL REVISED	
E	17/01/2019	GENERAL REVISED	
D	22/12/2018	GENERAL REVISED	
C	04/12/2018	GENERAL REVISED	
B	24/11/2018	GENERAL REVISED	
A	10/9/2018	GENERAL REVISED	

JOB NO. : J-837

PROJECT :
URA KWUN TONG TOWN CENTRE REDEVELOPMENT (AREA 2 & 3) AT NKIL 6514, KWUN TONG, KWLOON

TITLE :
PART ELEVATION OF CURTAIN WALL AT TOWER 1

DATE : 04-JUL-18 | SCALE : 1:60 (A1)

DRAWN BY : ASING | CHECKED BY : –

美特鋁質有限公司
MIDI ALUMINIUM FABRICATOR LTD.
Units 6-8, Sunray Industrial Centre, 1/F
610 Cha Kwo Ling Road, Kowloon
Tel:23489211-4 Fax:(852)27727666

DWG NO. : J837-CW-2102 | REV. : G

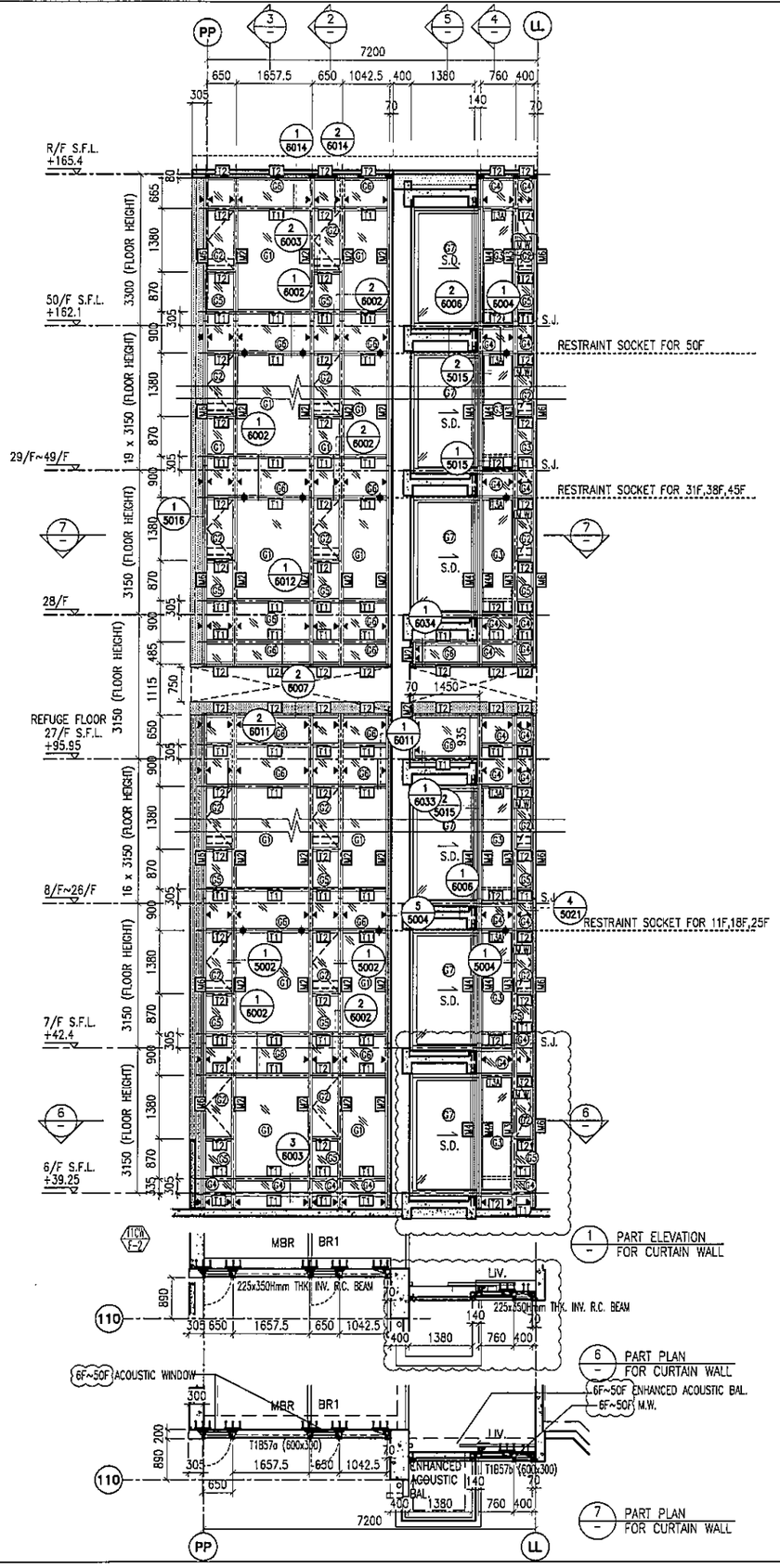

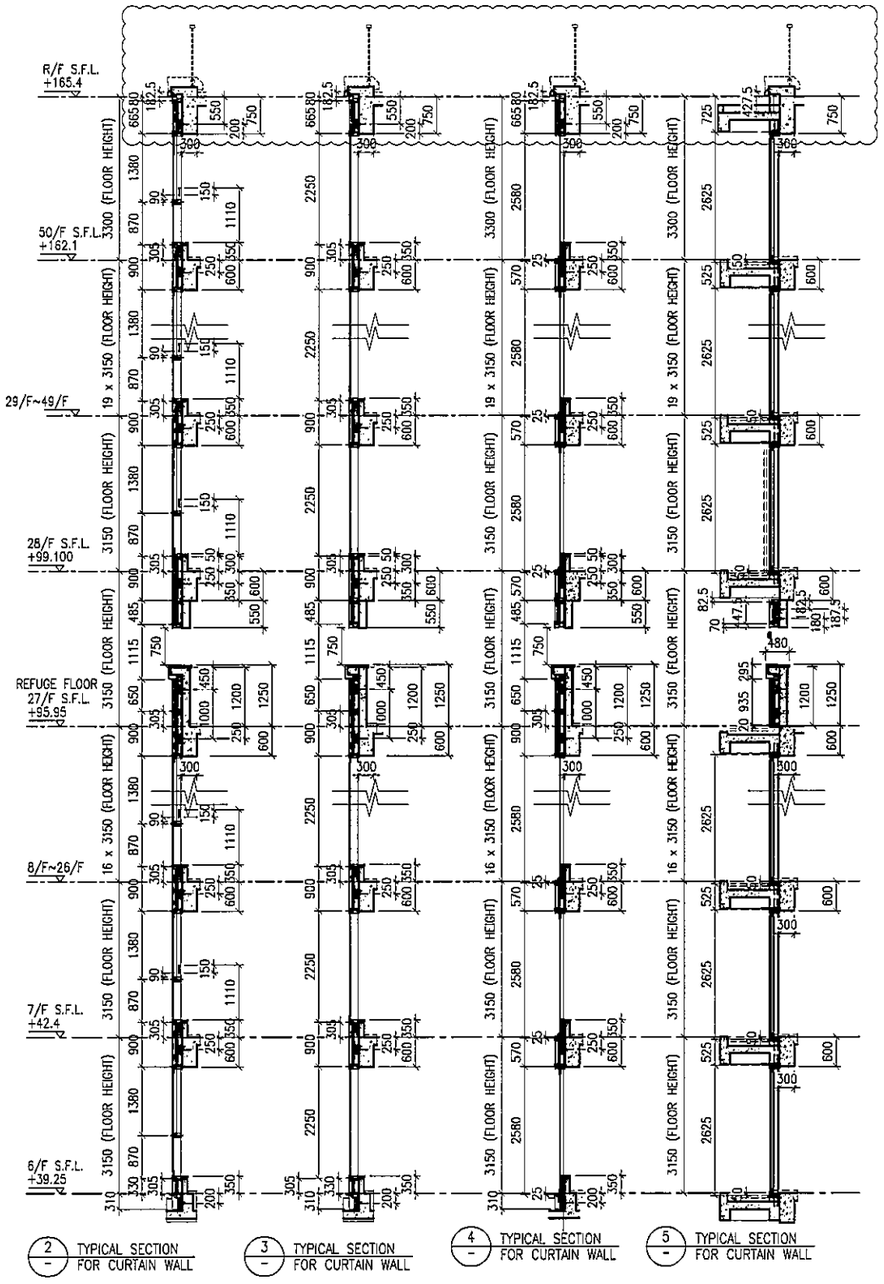

LEGEND:

- 10 mm THK. TEMPERED BLUE TINTED GLASS (OUTER) + 9 mm AIR SPACE + 8 mm THK. TEMPERED CLEAR GLASS (INNER)
- 8 mm THK. HEAT STRENGTHENED TINTED GLASS (OUTER)+ 9 mm AIR SPACE + 8 mm THK. HEAT STRENGTHENED CLEAR GLASS (INNER)
- 10 mm THK. HEAT STRENGTHENED BLUE TINTED GLASS (OUTER)+ 9 mm AIR SPACE + 8 mm THK. TEMPERED CLEAR GLASS (INNER)
- 8 mm THK. HEAT STRENGTHENED BLUE TINTED GLASS (SPANDREL GLASS)
- 8 mm THK. HEAT STRENGTHENED BLUE TINTED GLASS (OUTER)+ 9 mm AIR SPACE + 8 mm THK. TEMPERED CLEAR GLASS (INNER)
- 8 mm THK. TEMPERED BLUE TINTED GLASS (SPANDREL GLASS)
- 8 mm THK. HEAT STRENGTHENED TINTED GLASS (OUTER)+ 1.52PVB + 8 mm THK. HEAT STRENGTHENED CLEAR LAMINATED GLASS (INNER) 10 mm THK. TEMPERED GLASS (INTERNAL PROTECTIVE BARRIER)
- 3 mm THK. ALUM. CLADDING
- M.W. – MAINTENANCE WINDOW
- S.J. – STACK JOINT
- AE01 – ALUM. EXTRUSION DIE NO.
- ▲ – SUPPORT POINT
- ✦ – RESTRAINT SOCKET

B.D. REF :

CLIENT :
信和置業有限公司
Sino Land Company Limited

ARCHITECT : WONG TUNG & PARTNERS LIMITED
ARCHITECTS & PLANNERS

MAIN CONTRACTOR :
CR Construction Company Limited

STRUCTURAL ENGINEER :
AECOM

FACADE CONSULTANT:
AECOM

NOTE :
1. ALL DIMENSIONS ARE IN mm.
2. ALL ELEVATIONS ARE VIEWED FROM OUTSIDE.
3. ALL DIMENSIONS TO BE VERIFIED ON SITE BEFORE FABRICATION.

LEGEND :
X1 / X001 – DETAIL MARK NO. / REFER SHEET NO.
1. F.F.L. --FINISHED FLOOR LEVEL
2. S.F.L. --STRUCTURAL FLOOR LEVEL
3. /R --REVERSED DETAIL

NO.	DATE	REVISED	BY
H	16/07/2019	GENERAL REVISED	
G	26/05/2019	GENERAL REVISED	
F	21/05/2019	GENERAL REVISED	
E	17/01/2019	GENERAL REVISED	
D	22/12/2018	GENERAL REVISED	
C	04/12/2018	GENERAL REVISED	
B	24/11/2018	GENERAL REVISED	
A	10/9/2018	GENERAL REVISED	

JOB NO. : J-837

PROJECT :
URA KWUN TONG TOWN CENTRE REDEVELOPMENT (AREA 2 & 3) AT NKIL 6514, KWUN TONG, KWLOON

TITLE :
PART ELEVATION OF CURTAIN WALL AT TOWER 1

DATE : 04-JUL-18 | SCALE : 1:60 (A1)
DRAWN BY : ASING | CHECKED BY : --

美特鋁質有限公司
MIDI ALUMINIUM FABRICATOR LTD.
Units 6-8, Sunray Industrial Centre, 1/F
610 Cha Kwo Ling Road, Kowloon
Tel:23489211-4 Fax:(852)27727666

DWG NO. : J837-CW-2103 | REV. : H

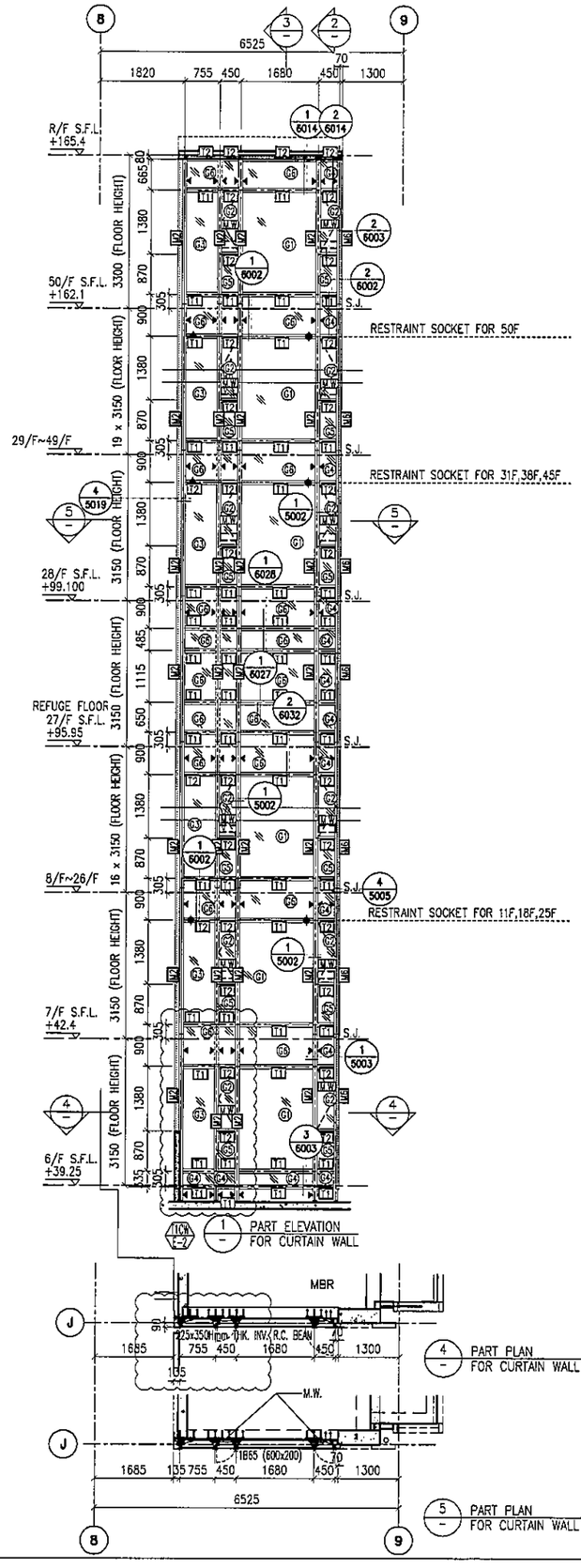

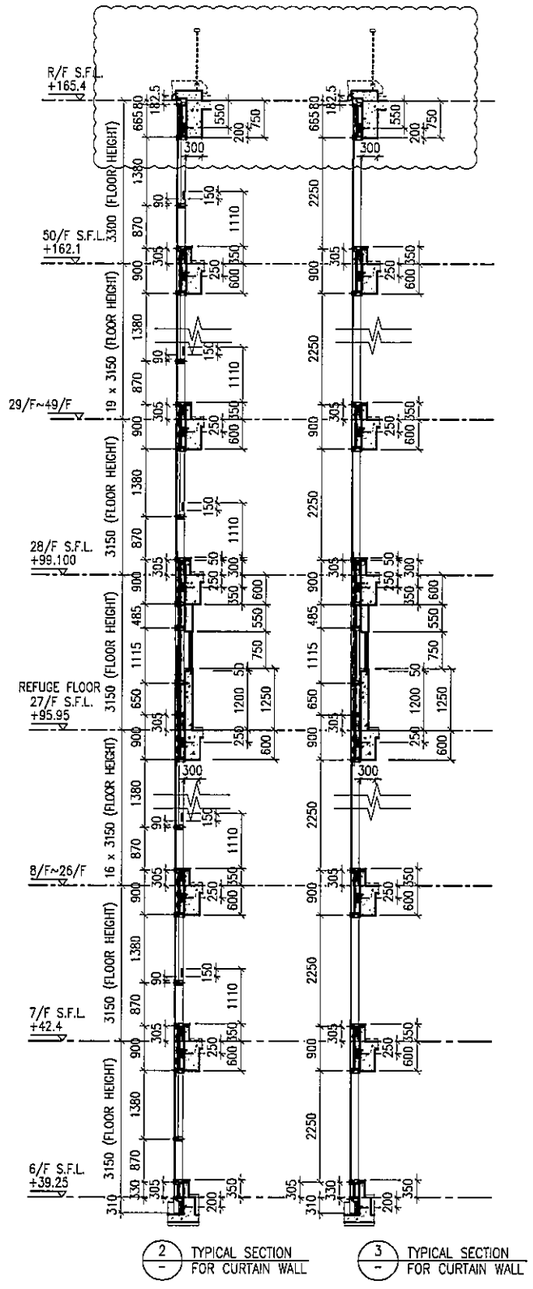

LEGEND:

- G1 – 10 mm THK. TEMPERED BLUE TINTED GLASS (OUTER) + 9 mm AIR SPACE + 8 mm THK. TEMPERED CLEAR GLASS (INNER)
- G2 – 8 mm THK. HEAT STRENGTHENED TINTED GLASS (OUTER)+ 9 mm AIR SPACE + 8 mm THK. HEAT STRENGTHENED CLEAR GLASS (INNER)
- G3 – 10 mm THK. HEAT STRENGTHENED BLUE TINTED GLASS (OUTER)+ 9 mm AIR SPACE + 8 mm THK. TEMPERED CLEAR GLASS (INNER)
- G4 – 8 mm THK. HEAT STRENGTHENED BLUE TINTED GLASS (SPANDREL GLASS)
- G5 – 8 mm THK. HEAT STRENGTHENED BLUE TINTED GLASS (OUTER)+ 9 mm AIR SPACE + 8 mm THK. TEMPERED CLEAR GLASS (INNER)
- G6 – 8 mm THK. TEMPERED BLUE TINTED GLASS (SPANDREL GLASS)
- G7 – 8 mm THK. HEAT STRENGTHENED TINTED GLASS (OUTER)+ 1.52PVB + 8 mm THK. HEAT STRENGTHENED CLEAR LAMINATED GLASS (INNER) 10 mm THK. TEMPERED GLASS (INTERNAL PROTECTIVE BARRIER)
- 3 mm THK. ALUM. CLADDING
- M.W. – MAINTENANCE WINDOW
- S.J. – STACK JOINT
- AE01 – ALUM. EXTRUSION DIE NO.
- ▲ – SUPPORT POINT
- ◆ – RESTRAINT SOCKET

B.D. REF :

CLIENT :
信和置業有限公司
Sino Land Company Limited

ARCHITECT :
WONG TUNG & PARTNERS LIMITED
ARCHITECTS & PLANNERS

MAIN CONTRACTOR :
CR Construction Company Limited

STRUCTURAL ENGINEER :
AECOM

FACADE CONSULTANT:
AECOM

NOTE :
1. ALL DIMENSIONS ARE IN mm.
2. ALL ELEVATIONS ARE VIEWED FROM OUTSIDE.
3. ALL DIMENSIONS TO BE VERIFIED ON SITE BEFORE FABRICATION.

LEGEND :
X1 / X001 — DETAIL MARK NO. / REFER SHEET NO.
1. F.F.L. --FINISHED FLOOR LEVEL
2. S.F.L. --STRUCTURAL FLOOR LEVEL
3. (R) --REVERSED DETAIL

NO.	DATE	REVISED	BY
G	16/07/2019	GENERAL REVISED	
F	19/05/2019	GENERAL REVISED	
E	17/01/2019	GENERAL REVISED	
D	22/12/2018	GENERAL REVISED	
C	04/12/2018	GENERAL REVISED	
B	24/11/2018	GENERAL REVISED	
A	10/9/2018	GENERAL REVISED	

JOB NO. : J-837

PROJECT :
URA KWUN TONG TOWN CENTRE REDEVELOPMENT (AREA 2 & 3) AT NKIL 6514, KWUN TONG, KWLOON

TITLE :
PART ELEVATION OF CURTAIN WALL AT TOWER 1

DATE : 04-JUL-18 | SCALE : 1:60 (A1)

DRAWN BY : ASING | CHECKED BY : –

美特鋁質有限公司
MIDI ALUMINIUM FABRICATOR LTD.
Units 6-8, Sunray Industrial Centre, 1/F
610 Cha Kwo Ling Road, Kowloon
Tel:23489211-4 Fax:(852)27727666

DWG NO. : J837-CW-2104 | REV. : G

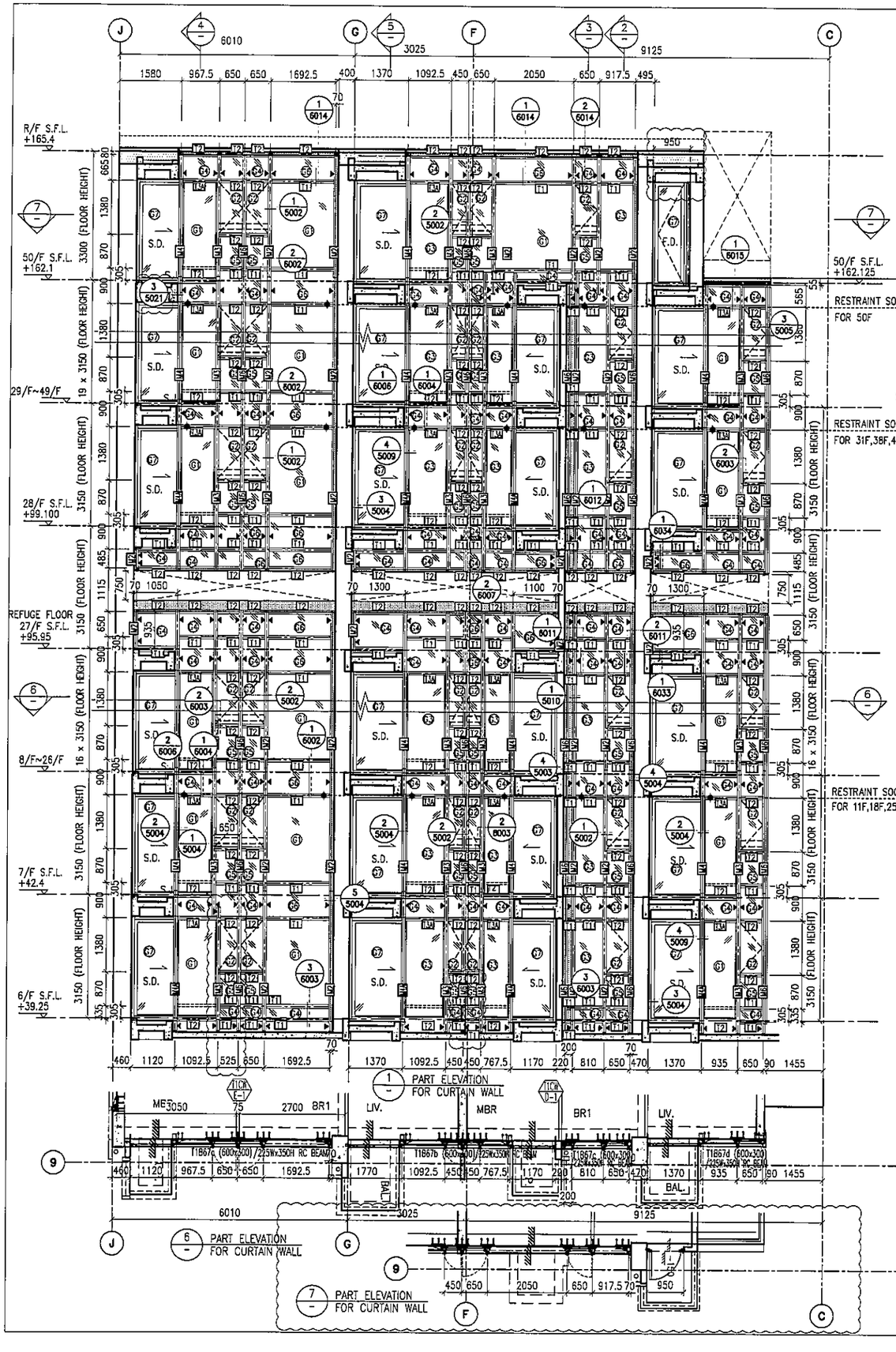

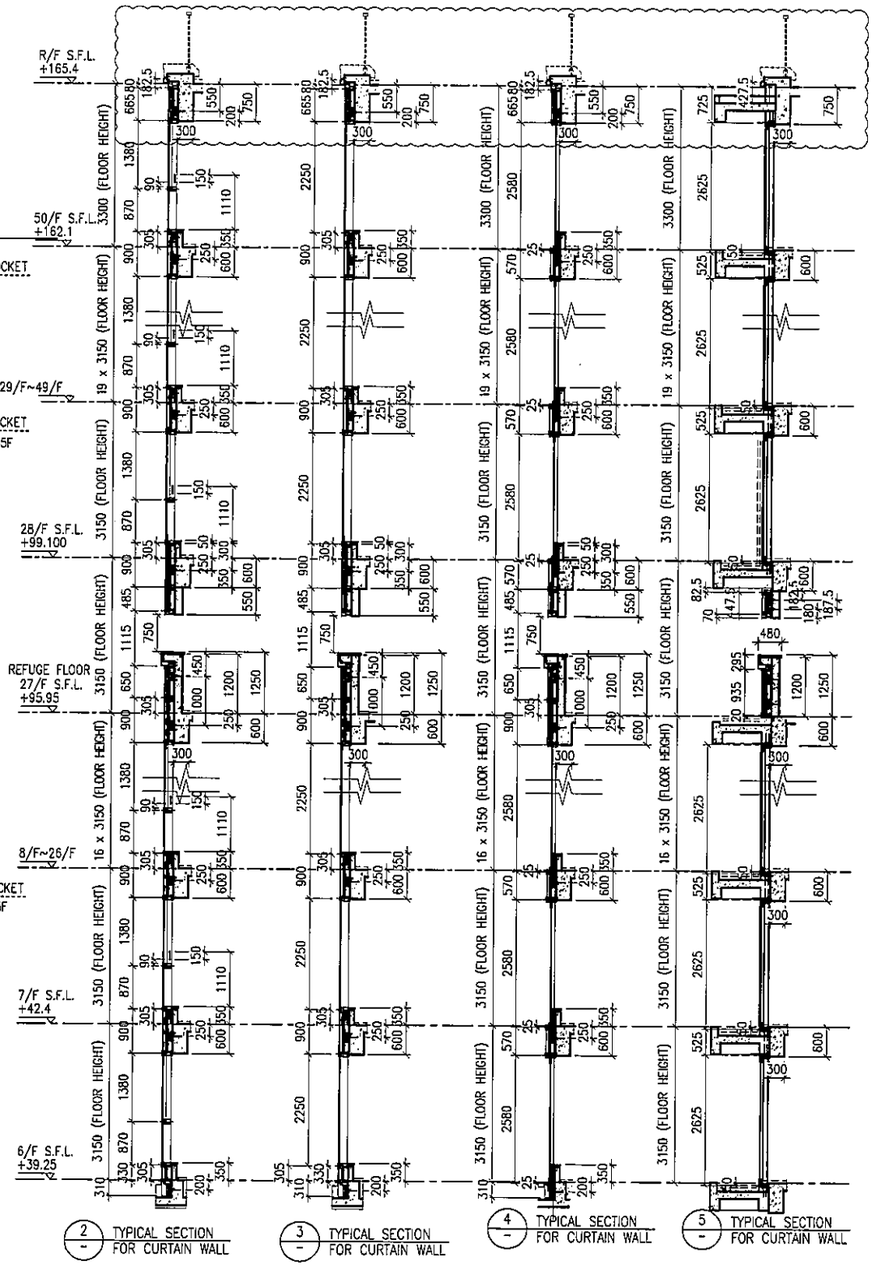

LEGEND:

- G1 – 10 mm THK. TEMPERED BLUE TINTED GLASS (OUTER) + 9 mm AIR SPACE + 8 mm THK. TEMPERED CLEAR GLASS (INNER)
- G2 – 8 mm THK. HEAT STRENGTHENED TINTED GLASS (OUTER)+ 9 mm AIR SPACE + 8 mm THK. HEAT STRENGTHENED CLEAR GLASS (INNER)
- G3 – 10 mm THK. HEAT STRENGTHENED BLUE TINTED GLASS (OUTER)+ 9 mm AIR SPACE + 8 mm THK. TEMPERED CLEAR GLASS (INNER)
- G4 – 8 mm THK. HEAT STRENGTHENED BLUE TINTED GLASS (SPANDREL GLASS)
- G5 – 8 mm THK. HEAT STRENGTHENED BLUE TINTED GLASS (OUTER)+ 9 mm AIR SPACE + 8 mm THK. TEMPERED CLEAR GLASS (INNER)
- G6 – 8 mm THK. TEMPERED BLUE TINTED GLASS (SPANDREL GLASS)
- G7 – 8 mm THK. HEAT STRENGTHENED TINTED GLASS (OUTER)+ 1.52PVB + 8 mm THK. HEAT STRENGTHENED CLEAR LAMINATED GLASS (INNER)
- 10 mm THK. TEMPERED GLASS (INTERNAL PROTECTIVE BARRIER)
- 3 mm THK. ALUM. CLADDING
- M.W. – MAINTENANCE WINDOW
- S.J. – STACK JOINT
- AE01 – ALUM. EXTRUSION DIE NO.
- ▲ – SUPPORT POINT
- ◆ – RESTRAINT SOCKET

B.D. REF :

CLIENT :
信和置業有限公司
Sino Land Company Limited

ARCHITECT :
WONG TUNG & PARTNERS LIMITED
ARCHITECTS & PLANNERS

MAIN CONTRACTOR :
CR Construction Company Limited

STRUCTURAL ENGINEER :
AECOM

FACADE CONSULTANT:
AECOM

NOTE :
1. ALL DIMENSIONS ARE IN mm.
2. ALL ELEVATIONS ARE VIEWED FROM OUTSIDE.
3. ALL DIMENSIONS TO BE VERIFIED ON SITE BEFORE FABRICATION.

LEGEND :
X1 — DETAIL MARK NO.
X001 — REFER SHEET NO.

1. F.F.L. --FINISHED FLOOR LEVEL
2. S.F.L. --STRUCTURAL FLOOR LEVEL
3. (R) --REVERSED DETAIL

NO.	DATE	REVISED	BY
G	16/07/2019	GENERAL REVISED	
F	26/05/2019	GENERAL REVISED	
E	17/01/2019	GENERAL REVISED	
D	22/12/2018	GENERAL REVISED	
C	04/12/2018	GENERAL REVISED	
B	24/11/2018	GENERAL REVISED	
A	10/9/2018	GENERAL REVISED	

JOB NO. : J-837

PROJECT :
URA KWUN TONG TOWN CENTRE REDEVELOPMENT (AREA 2 & 3) AT NKIL 6514, KWUN TONG, KWLOON

TITLE :
PART ELEVATION OF CURTAIN WALL AT TOWER 1

DATE : 04-JUL-18 | SCALE : 1:60 (A1)

DRAWN BY : ASING | CHECKED BY : –

美特鋁質有限公司
MIDI ALUMINIUM FABRICATOR LTD.
Units 6-8, Sunray Industrial Centre, 1/F
610 Cha Kwo Ling Road, Kowloon
Tel:23489211-4 Fax:(852)27727666

DWG NO. : J837-CW-2105 | REV. : G

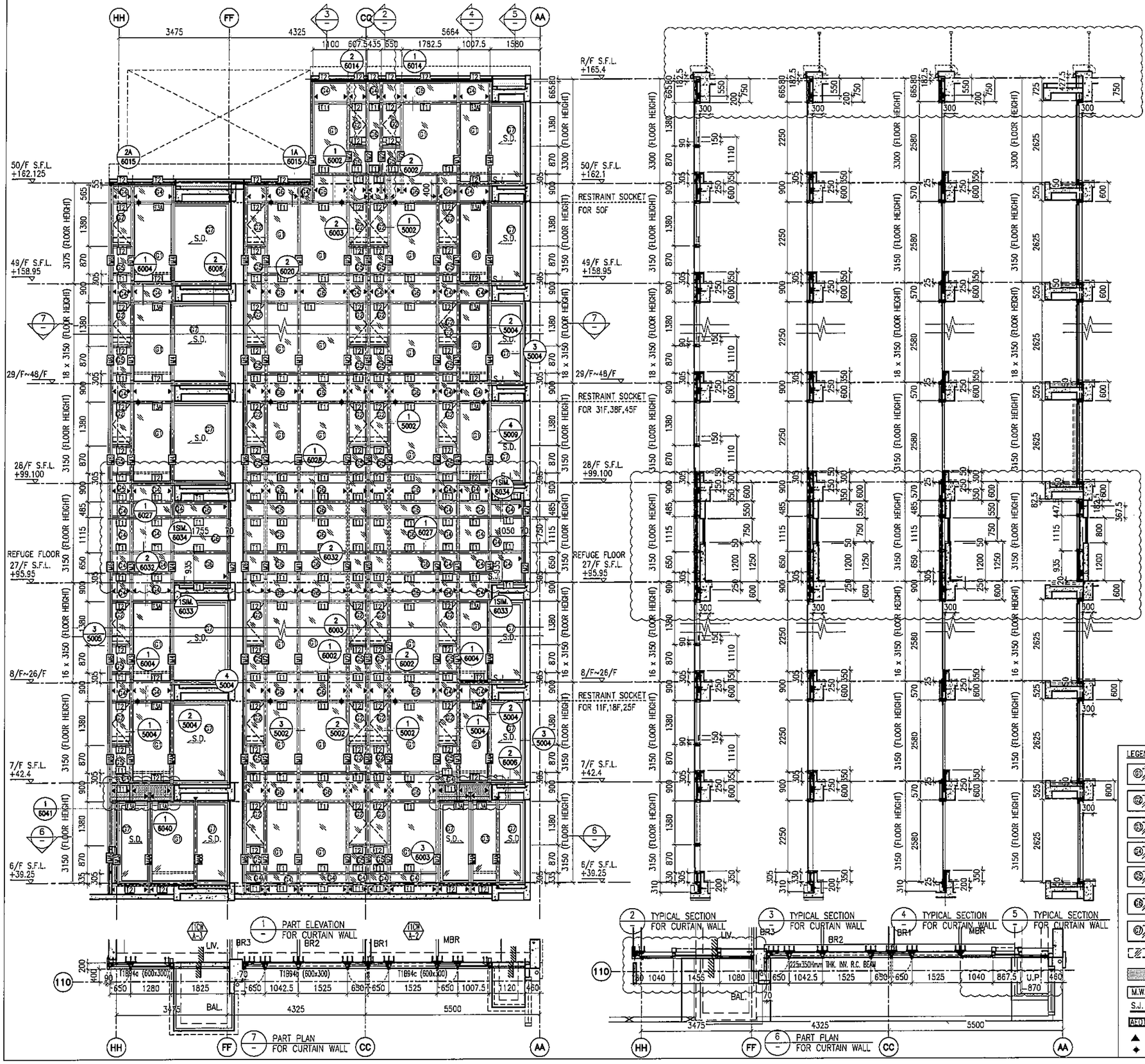

LEGEND:

- 6mm+ – 10 mm THK. TEMPERED BLUE TINTED GLASS (OUTER) + 9 mm AIR SPACE + 8 mm THK. TEMPERED CLEAR GLASS (INNER)
- 6mm+ – 8 mm THK. HEAT STRENGTHENED TINTED GLASS (OUTER)+ 9 mm AIR SPACE + 8 mm THK. HEAT STRENGTHENED CLEAR GLASS (INNER)
- 6mm+ – 10 mm THK. HEAT STRENGTHENED BLUE TINTED GLASS (OUTER)+ 9 mm AIR SPACE + 8 mm THK. TEMPERED CLEAR GLASS (INNER)
- 8mm+ – 8 mm THK. HEAT STRENGTHENED BLUE TINTED GLASS (SPANDREL GLASS)
- 8mm+ – 8 mm THK. HEAT STRENGTHENED BLUE TINTED GLASS (OUTER)+ 9 mm AIR SPACE + 8 mm THK. TEMPERED CLEAR GLASS (INNER)
- 8mm+ – 8 mm THK. TEMPERED BLUE TINTED GLASS (SPANDREL GLASS)
- 8mm+ – 8 mm THK. HEAT STRENGTHENED TINTED GLASS (OUTER)+ 1.52PVB + 8 mm THK. HEAT STRENGTHENED CLEAR LAMINATED GLASS (INNER)
- 10 mm THK. TEMPERED GLASS (INTERNAL PROTECTIVE BARRIER)
- 3 mm THK. ALUM. CLADDING
- M.W. – MAINTENANCE WINDOW
- S.J. – STACK JOINT
- AE-01 – ALUM. EXTRUSION DIE NO.
- ▲ – SUPPORT POINT
- ◆ – RESTRAINT SOCKET

B.D. REF :

CLIENT :
信和置業有限公司
Sino Land Company Limited

ARCHITECT :
WONG TUNG & PARTNERS LIMITED
ARCHITECTS & PLANNERS

MAIN CONTRACTOR :
CR Construction Company Limited

STRUCTURAL ENGINEER :
AECOM

FACADE CONSULTANT:
AECOM

NOTE :
1. ALL DIMENSIONS ARE IN mm.
2. ALL ELEVATIONS ARE VIEWED FROM OUTSIDE.
3. ALL DIMENSIONS TO BE VERIFIED ON SITE BEFORE FABRICATION.

LEGEND :
X1 — DETAIL MARK NO.
X001 — REFER SHEET NO.

1. F.F.L. --FINISHED FLOOR LEVEL
2. S.F.L. --STRUCTURAL FLOOR LEVEL
3. /R --REVERSED DETAIL

NO.	DATE	REVISED	BY
H	16/07/2019	GENERAL REVISED	
G	26/05/2019	GENERAL REVISED	
F	07/04/2019	GENERAL REVISED	
E	17/01/2019	GENERAL REVISED	
D	22/12/2018	GENERAL REVISED	
C	04/12/2018	GENERAL REVISED	
B	24/11/2018	GENERAL REVISED	
A	10/9/2018	GENERAL REVISED	

JOB NO. : J-837

PROJECT :
URA KWUN TONG TOWN CENTRE REDEVELOPMENT (AREA 2 & 3) AT NKIL 6514, KWUN TONG, KWLOON

TITLE :
PART ELEVATION OF CURTAIN WALL AT TOWER 1

DATE : 04-JUL-18 | SCALE : 1:60 (A1)

DRAWN BY : ASING | CHECKED BY : -

美特鋁製有限公司
MIDI ALUMINIUM FABRICATOR LTD.
Units 6-8, Sunray Industrial Centre, 1/F
610 Cha Kwo Ling Road, Kowloon
Tel:23489211-4 Fax:(852)27727666

DWG NO. : J837-CW-2106 | REV. : H

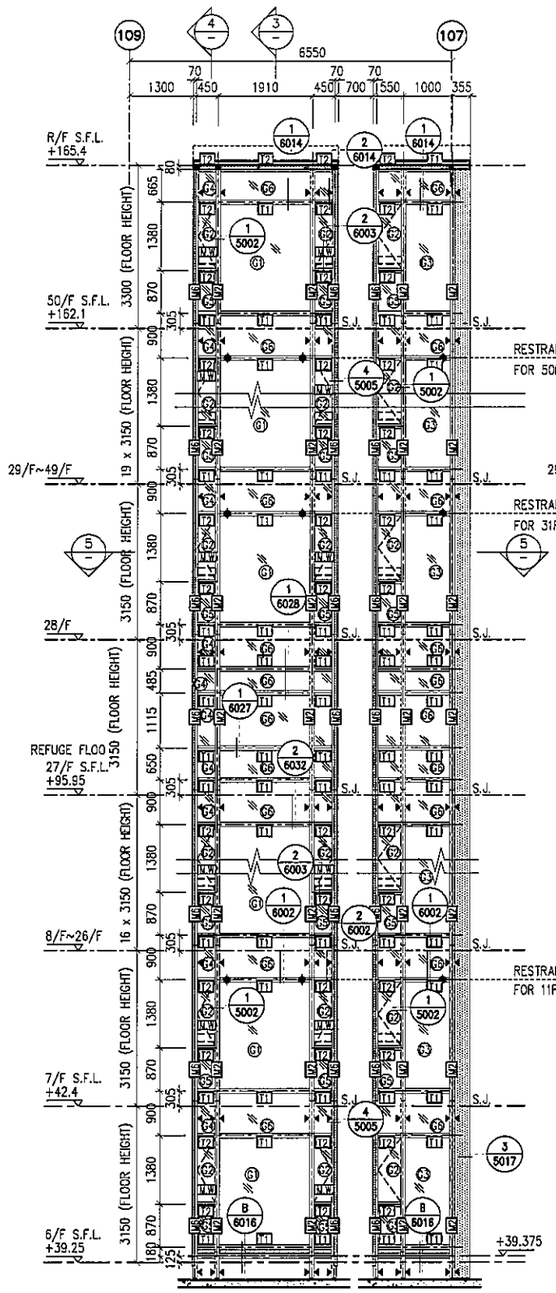

1 / – PART ELEVATION FOR CURTAIN WALL

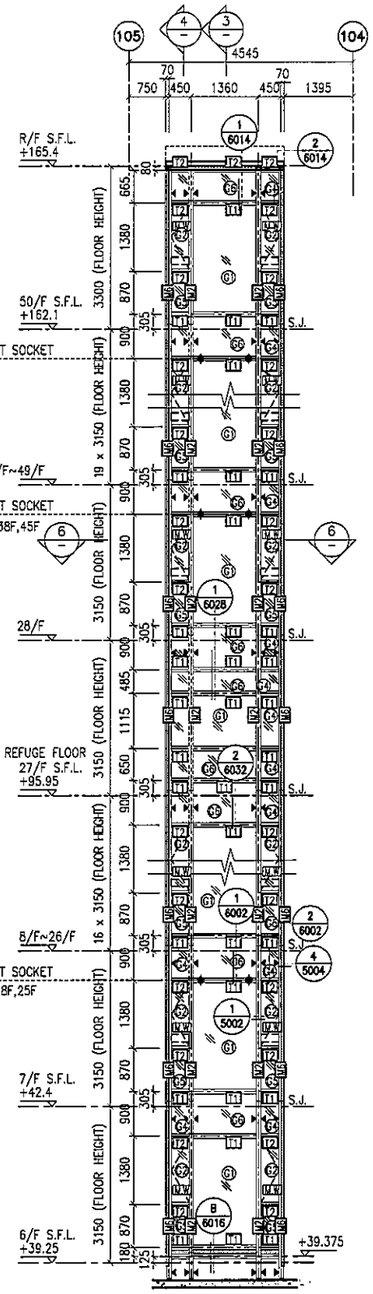

2 / – PART ELEVATION FOR CURTAIN WALL

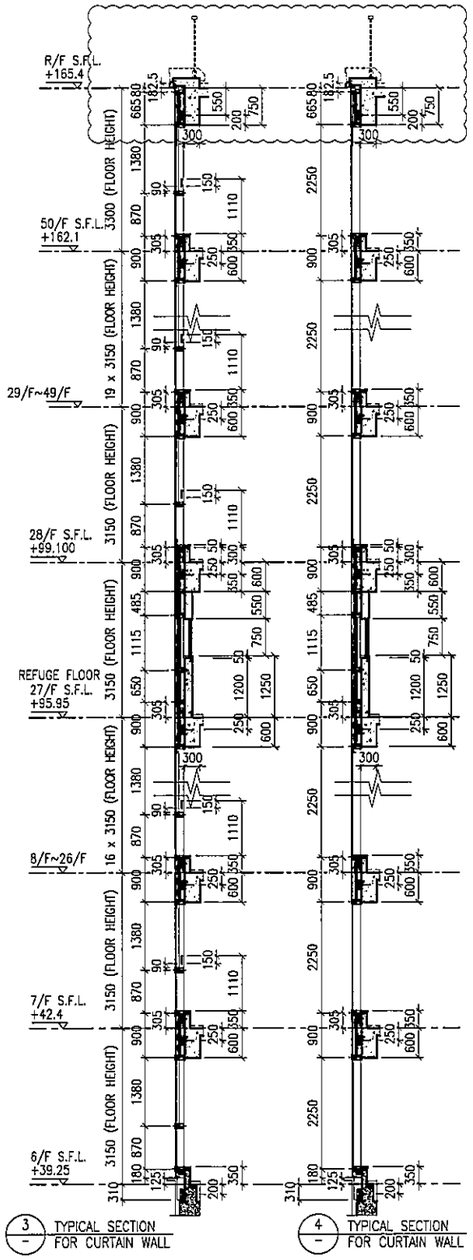

3 / – TYPICAL SECTION FOR CURTAIN WALL

4 / – TYPICAL SECTION FOR CURTAIN WALL

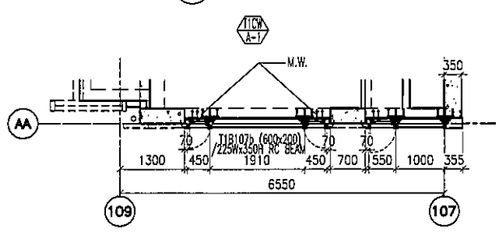

5 / – PART PLAN FOR CURTAIN WALL

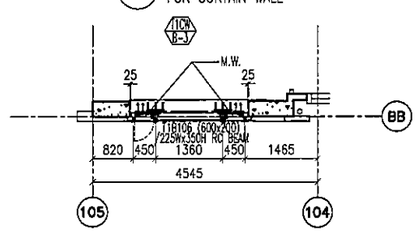

6 / – PART PLAN FOR CURTAIN WALL

LEGEND:

- G1 – 10 mm THK. TEMPERED BLUE TINTED GLASS (OUTER) + 9 mm AIR SPACE + 8 mm THK. TEMPERED CLEAR GLASS (INNER)
- G2 – 8 mm THK. HEAT STRENGTHENED TINTED GLASS (OUTER)+ 9 mm AIR SPACE + 8 mm THK. HEAT STRENGTHENED CLEAR GLASS (INNER)
- G3 – 10 mm THK. HEAT STRENGTHENED BLUE TINTED GLASS (OUTER)+ 9 mm AIR SPACE + 8 mm THK. TEMPERED CLEAR GLASS (INNER)
- G5 – 8 mm THK. HEAT STRENGTHENED BLUE TINTED GLASS (SPANDREL GLASS)
- G6 – 8 mm THK. HEAT STRENGTHENED BLUE TINTED GLASS (OUTER)+ 9 mm AIR SPACE + 8 mm THK. TEMPERED CLEAR GLASS (INNER)
- G6 – 8 mm THK. TEMPERED BLUE TINTED GLASS (SPANDREL GLASS)
- G7 – 8 mm THK. HEAT STRENGTHENED TINTED GLASS (OUTER)+ 1.52PVB + 8 mm THK. HEAT STRENGTHENED CLEAR LAMINATED GLASS (INNER) 10 mm THK. TEMPERED GLASS (INTERNAL PROTECTIVE BARRIER)
- 3 mm THK. ALUM. CLADDING
- M.W. – MAINTENANCE WINDOW
- S.J. – STACK JOINT
- AE01 – ALUM. EXTRUSION DIE NO.
- ▲ – SUPPORT POINT
- ◆ – RESTRAINT SOCKET

B.D. REF :

CLIENT :
信和置業有限公司
Sino Land Company Limited

ARCHITECT :
WONG TUNG & PARTNERS LIMITED
ARCHITECTS & PLANNERS

MAIN CONTRACTOR :
CR Construction Company Limited

STRUCTURAL ENGINEER :
AECOM

FACADE CONSULTANT:
AECOM

NOTE :
1. ALL DIMENSIONS ARE IN mm.
2. ALL ELEVATIONS ARE VIEWED FROM OUTSIDE.
3. ALL DIMENSIONS TO BE VERIFIED ON SITE BEFORE FABRICATION.

LEGEND :
X1 / XD01 — DETAIL MARK NO. / REFER SHEET NO.
1. F.F.L. --FINISHED FLOOR LEVEL
2. S.F.L. --STRUCTURAL FLOOR LEVEL
3. /R --REVERSED DETAIL

NO.	DATE	REVISED	BY
G	16/07/2019	GENERAL REVISED	
F	17/01/2019	GENERAL REVISED	
E	02/01/2019	GENERAL REVISED	
D	22/12/2018	GENERAL REVISED	
C	04/12/2018	GENERAL REVISED	
B	24/11/2018	GENERAL REVISED	
A	10/9/2018	GENERAL REVISED	

JOB NO. : J-837

PROJECT :
URA KWUN TONG TOWN CENTRE REDEVELOPMENT (AREA 2 & 3) AT NKIL 6514, KWUN TONG, KWLOON

TITLE :
PART ELEVATION OF CURTAIN WALL AT TOWER 1

DATE : 04-JUL-18	SCALE : 1:60 (A1)
DRAWN BY : ASING	CHECKED BY : –

美特鋁質有限公司
MIDI ALUMINIUM FABRICATOR LTD.
Units 6-8, Sunray Industrial Centre, 1/F
610 Cho Kwo Ling Road, Kowloon
Tel:23489211-4 Fax:(852)27727666

DWG NO. : J837-CW-2107 | REV. : G

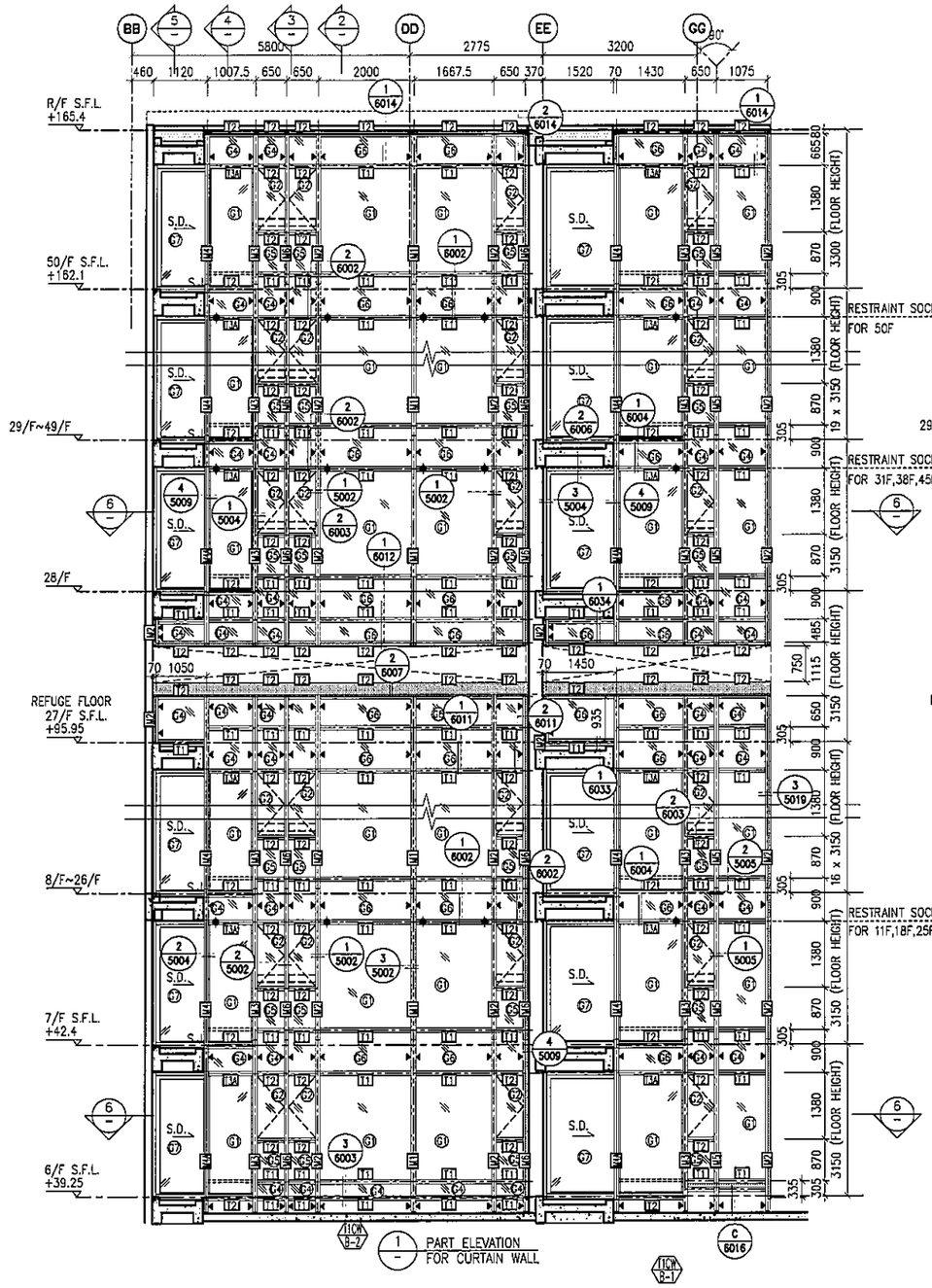

1 PART ELEVATION FOR CURTAIN WALL

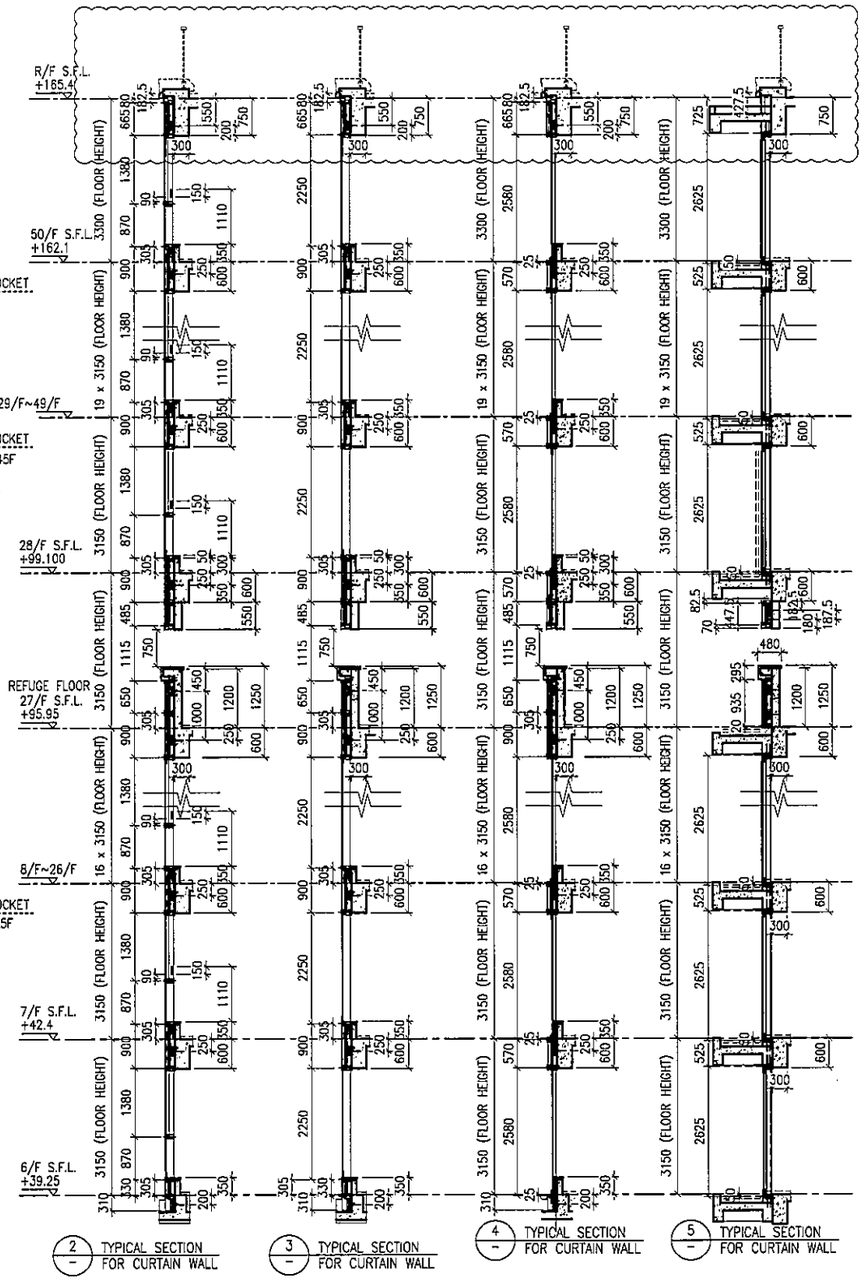

2 TYPICAL SECTION FOR CURTAIN WALL

3 TYPICAL SECTION FOR CURTAIN WALL

4 TYPICAL SECTION FOR CURTAIN WALL

5 TYPICAL SECTION FOR CURTAIN WALL

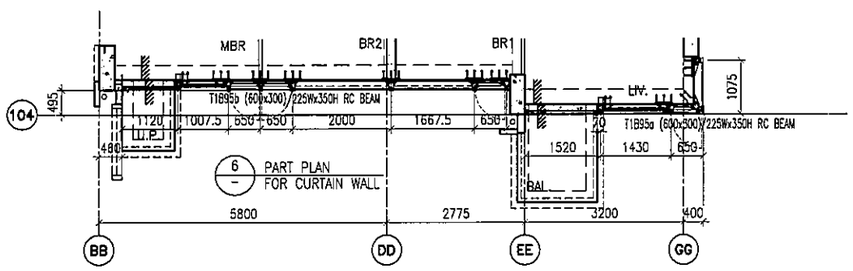

6 PART PLAN FOR CURTAIN WALL

LEGEND:

- 10 mm THK. TEMPERED BLUE TINTED GLASS (OUTER) + 9 mm AIR SPACE + 8 mm THK. TEMPERED CLEAR GLASS (INNER)
- 8 mm THK. HEAT STRENGTHENED TINTED GLASS (OUTER)+ 9 mm AIR SPACE + 8 mm THK. HEAT STRENGTHENED CLEAR GLASS (INNER)
- 10 mm THK. HEAT STRENGTHENED BLUE TINTED GLASS (OUTER)+ 9 mm AIR SPACE + 8 mm THK. TEMPERED CLEAR GLASS (INNER)
- 8 mm THK. HEAT STRENGTHENED BLUE TINTED GLASS (SPANDREL GLASS)
- 8 mm THK. HEAT STRENGTHENED BLUE TINTED GLASS (OUTER)+ 9 mm AIR SPACE + 8 mm THK. TEMPERED CLEAR GLASS (INNER)
- 8 mm THK. TEMPERED BLUE TINTED GLASS (SPANDREL GLASS)
- 8 mm THK. HEAT STRENGTHENED TINTED GLASS (OUTER)+ 1.52PVB + 8 mm THK. HEAT STRENGTHENED CLEAR LAMINATED GLASS (INNER)
- 10 mm THK. TEMPERED GLASS (INTERNAL PROTECTIVE BARRIER)
- 3 mm THK. ALUM. CLADDING
- M.W. – MAINTENANCE WINDOW
- S.J. – STACK JOINT
- AE01 – ALUM. EXTRUSION DIE NO.
- ▲ – SUPPORT POINT
- ◆ – RESTRAINT SOCKET

B.D. REF :

CLIENT :
信和置業有限公司
Sino Land Company Limited

ARCHITECT : WONG TUNG & PARTNERS LIMITED
ARCHITECTS & PLANNERS

MAIN CONTRACTOR :
CR Construction Company Limited

STRUCTURAL ENGINEER :
AECOM

FACADE CONSULTANT:
AECOM

NOTE :
1. ALL DIMENSIONS ARE IN mm.
2. ALL ELEVATIONS ARE VIEWED FROM OUTSIDE.
3. ALL DIMENSIONS TO BE VERIFIED ON SITE BEFORE FABRICATION.

LEGEND :
- X1 / X001 – DETAIL MARK NO. / REFER SHEET NO.
1. F.F.L. --FINISHED FLOOR LEVEL
2. S.F.L. --STRUCTURAL FLOOR LEVEL
3. /R --REVERSED DETAIL

NO.	DATE	REVISED	BY
F	16/07/2019	GENERAL REVISED	
E	17/01/2019	GENERAL REVISED	
D	22/12/2018	GENERAL REVISED	
C	04/12/2018	GENERAL REVISED	
B	24/11/2018	GENERAL REVISED	
A	10/9/2018	GENERAL REVISED	

JOB NO. : J-837

PROJECT :
URA KWUN TONG TOWN CENTRE REDEVELOPMENT (AREA 2 & 3) AT NKIL 6514, KWUN TONG, KWLOON

TITLE :
PART ELEVATION OF CURTAIN WALL AT TOWER 1

DATE : 04-JUL-18 | SCALE : 1:60 (A1)

DRAWN BY : ASING | CHECKED BY : –

美特鋁質有限公司
MIDI ALUMINIUM FABRICATOR LTD.
Units 6-8, Sunray Industrial Centre, 1/F
610 Cha Kwo Ling Road, Kowloon
Tel:23489211-4 Fax:(852)27727666

DWG NO. : J837-CW-2108 | REV. : F

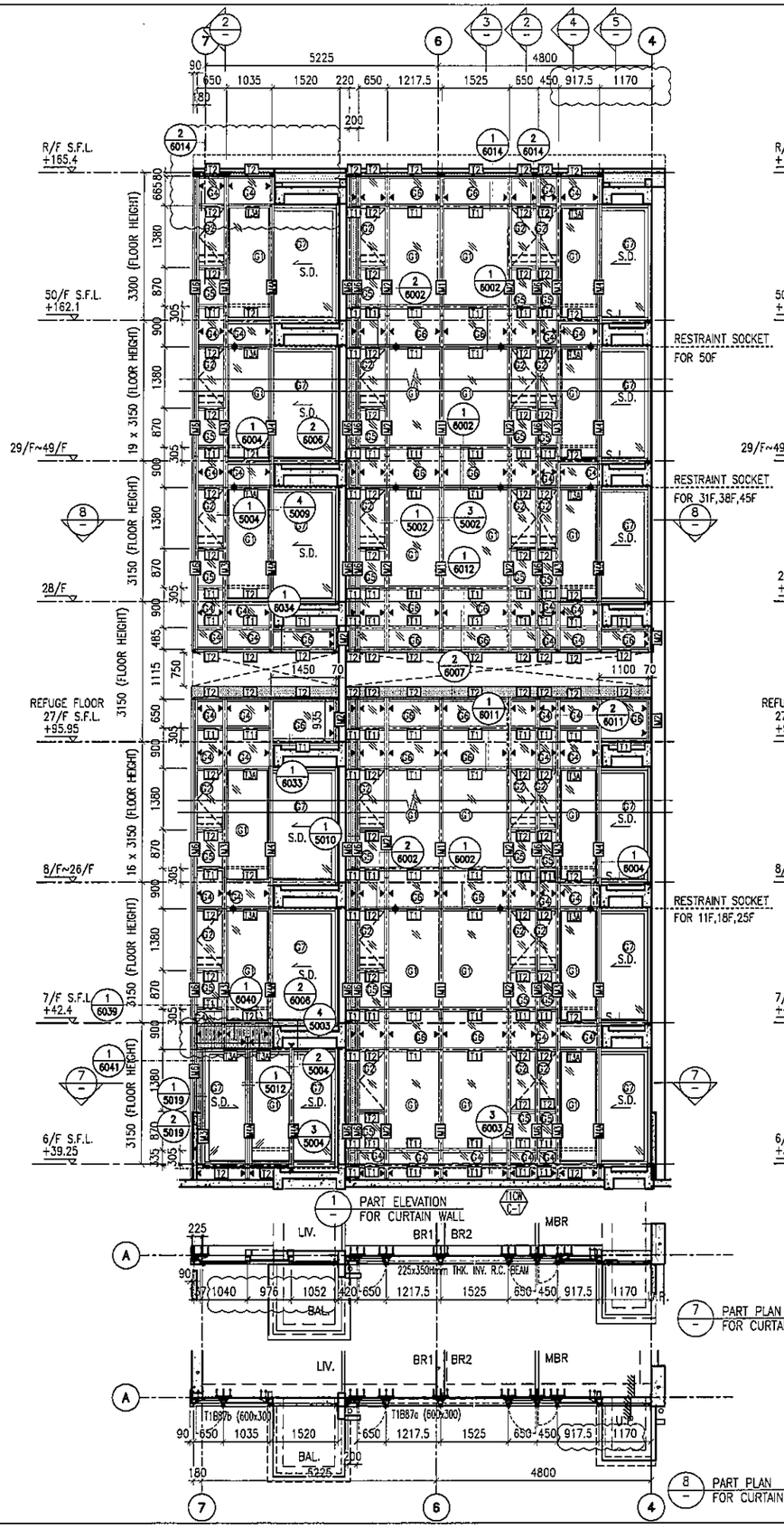

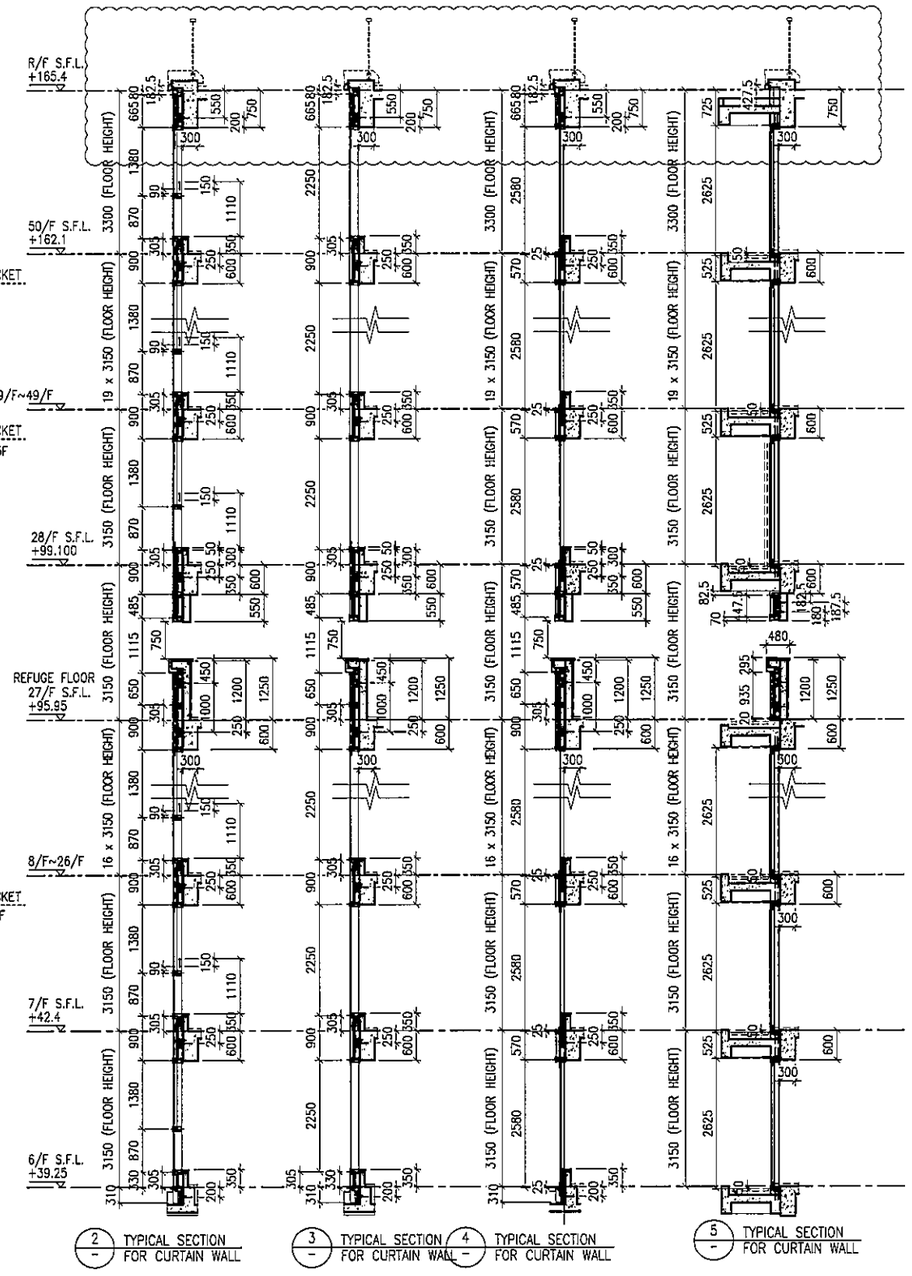

LEGEND:

- 10 mm THK. TEMPERED BLUE TINTED GLASS (OUTER) + 9 mm AIR SPACE + 8 mm THK. TEMPERED CLEAR GLASS (INNER)
- 8 mm THK. HEAT STRENGTHENED TINTED GLASS (OUTER)+ 9 mm AIR SPACE + 8 mm THK. HEAT STRENGTHENED CLEAR GLASS (INNER)
- 10 mm THK. HEAT STRENGTHENED BLUE TINTED GLASS (OUTER)+ 9 mm AIR SPACE + 8 mm THK. TEMPERED CLEAR GLASS (INNER)
- 8 mm THK. HEAT STRENGTHENED BLUE TINTED GLASS (SPANDREL GLASS)
- 8 mm THK. HEAT STRENGTHENED BLUE TINTED GLASS (OUTER)+ 9 mm AIR SPACE + 8 mm THK. TEMPERED CLEAR GLASS (INNER)
- 8 mm THK. TEMPERED BLUE TINTED GLASS (SPANDREL GLASS)
- 8 mm THK. HEAT STRENGTHENED TINTED GLASS (OUTER)+ 1.52PVB + 8 mm THK. HEAT STRENGTHENED CLEAR LAMINATED GLASS (INNER) 10 mm THK. TEMPERED GLASS (INTERNAL PROTECTIVE BARRIER)
- 3 mm THK. ALUM. CLADDING
- M.W. – MAINTENANCE WINDOW
- S.J. – STACK JOINT
- AE01 – ALUM. EXTRUSION DIE NO.
- ▲ – SUPPORT POINT
- ◆ – RESTRAINT SOCKET

B.D. REF :

CLIENT :
信和置業有限公司
Sino Land Company Limited

ARCHITECT : WONG TUNG & PARTNERS LIMITED ARCHITECTS & PLANNERS

MAIN CONTRACTOR :
CR Construction Company Limited

STRUCTURAL ENGINEER : AECOM

FACADE CONSULTANT: AECOM

NOTE :
1. ALL DIMENSIONS ARE IN mm.
2. ALL ELEVATIONS ARE VIEWED FROM OUTSIDE.
3. ALL DIMENSIONS TO BE VERIFIED ON SITE BEFORE FABRICATION.

LEGEND :
X1 — DETAIL MARK NO.
X001 — REFER SHEET NO.

1. F.F.L. --FINISHED FLOOR LEVEL
2. S.F.L. --STRUCTURAL FLOOR LEVEL
3. (R) --REVERSED DETAIL

NO.	DATE	REVISED	BY
H	16/07/2019	GENERAL REVISED	
G	26/05/2019	GENERAL REVISED	
F	07/04/2019	GENERAL REVISED	
E	17/01/2019	GENERAL REVISED	
D	22/12/2018	GENERAL REVISED	
C	04/12/2018	GENERAL REVISED	
B	24/11/2018	GENERAL REVISED	
A	10/9/2018	GENERAL REVISED	

JOB NO. : J-837

PROJECT :
URA KWUN TONG TOWN CENTRE REDEVELOPMENT (AREA 2 & 3) AT NKIL 6514, KWUN TONG, KWLOON

TITLE :
PART ELEVATION OF CURTAIN WALL AT TOWER 1

DATE : 04-JUL-18	SCALE : 1:60 (A1)
DRAWN BY : ASING	CHECKED BY : -

美特鋁質有限公司
MIDI ALUMINIUM FABRICATOR LTD.
Units 6-8, Sunray Industrial Centre, 1/F
610 Cha Kwo Ling Road, Kowloon
Tel:23489211-4 Fax:(852)27727666

DWG NO. : J837-CW-2109 | REV. : H

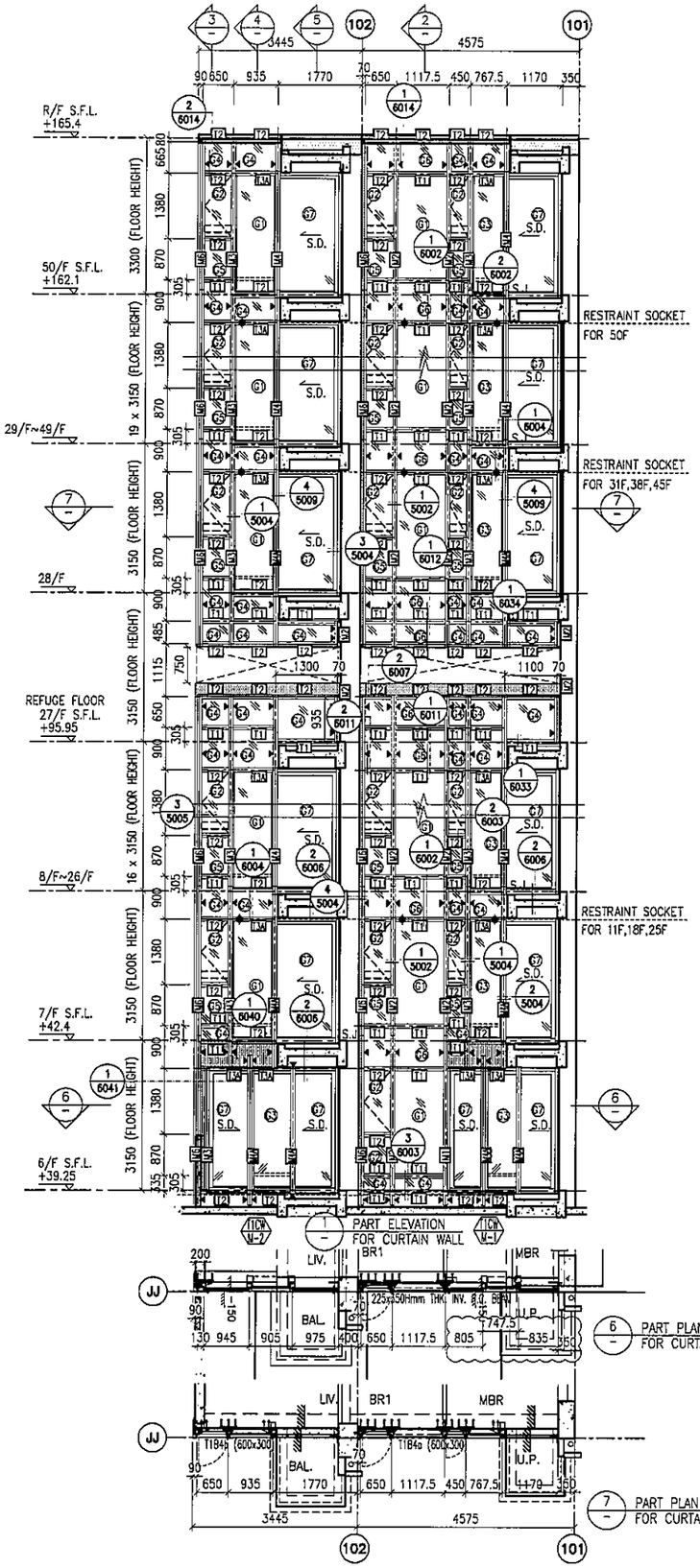

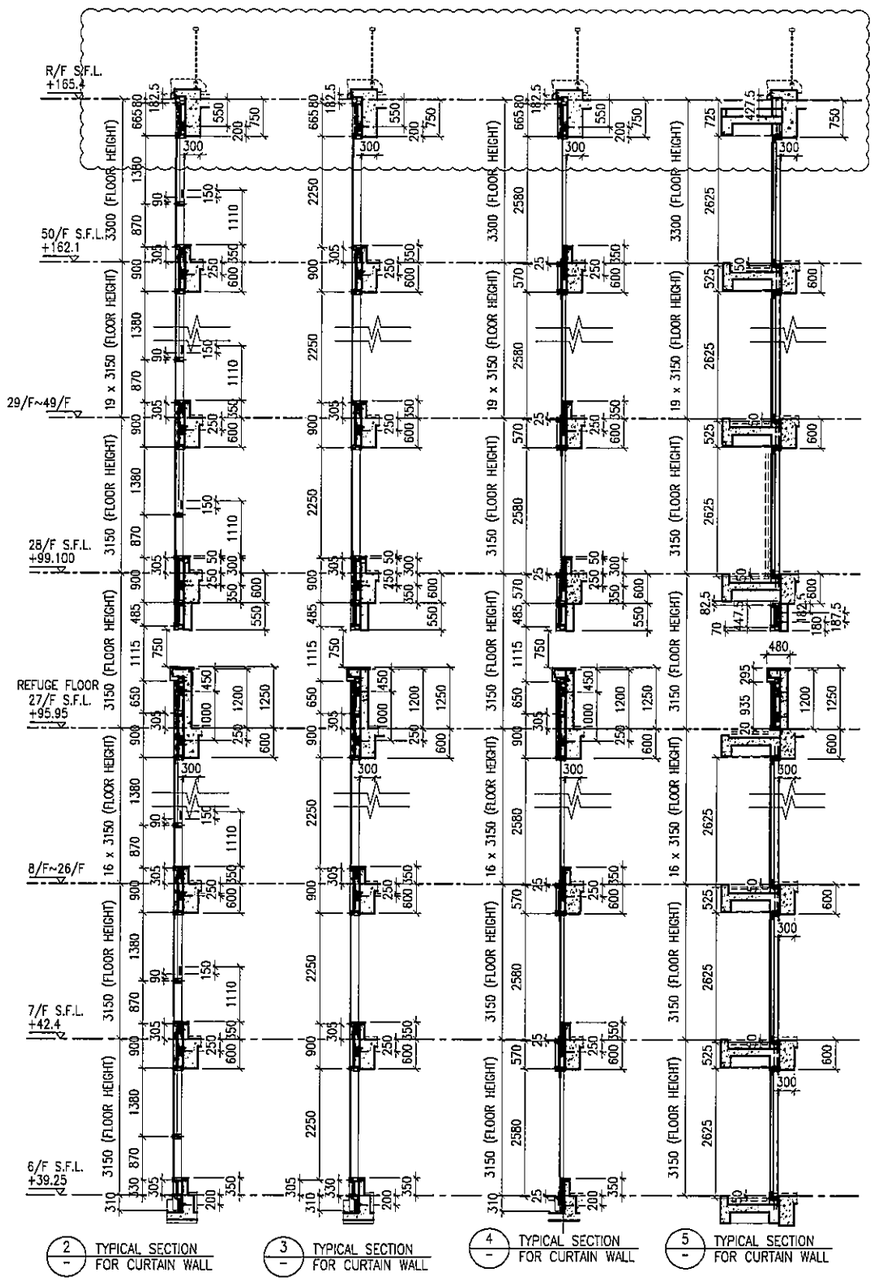

2 / – TYPICAL SECTION FOR CURTAIN WALL

3 / – TYPICAL SECTION FOR CURTAIN WALL

4 / – TYPICAL SECTION FOR CURTAIN WALL

5 / – TYPICAL SECTION FOR CURTAIN WALL

LEGEND:

- 10 mm THK. TEMPERED BLUE TINTED GLASS (OUTER) + 9 mm AIR SPACE + 8 mm THK. TEMPERED CLEAR GLASS (INNER)
- 8 mm THK. HEAT STRENGTHENED TINTED GLASS (OUTER)+ 9 mm AIR SPACE + 8 mm THK. HEAT STRENGTHENED CLEAR GLASS (INNER)
- 10 mm THK. HEAT STRENGTHENED BLUE TINTED GLASS (OUTER)+ 9 mm AIR SPACE + 8 mm THK. TEMPERED CLEAR GLASS (INNER)
- 8 mm THK. HEAT STRENGTHENED BLUE TINTED GLASS (SPANDREL GLASS)
- 8 mm THK. HEAT STRENGTHENED BLUE TINTED GLASS (OUTER)+ 9 mm AIR SPACE + 8 mm THK. TEMPERED CLEAR GLASS (INNER)
- 8 mm THK. TEMPERED BLUE TINTED GLASS (SPANDREL GLASS)
- 8 mm THK. HEAT STRENGTHENED TINTED GLASS (OUTER)+ 1.52PVB + 8 mm THK. HEAT STRENGTHENED CLEAR LAMINATED GLASS (INNER) 10 mm THK. TEMPERED GLASS (INTERNAL PROTECTIVE BARRIER)
- 3 mm THK. ALUM. CLADDING
- M.W. – MAINTENANCE WINDOW
- S.J. – STACK JOINT
- AE01 – ALUM. EXTRUSION DIE NO.
- ▲ – SUPPORT POINT
- ◆ – RESTRAINT SOCKET

B.D. REF :

CLIENT :
信和置業有限公司
Sino Land Company Limited

ARCHITECT :
WONG TUNG & PARTNERS LIMITED
ARCHITECTS & PLANNERS

MAIN CONTRACTOR :
CR Construction Company Limited

STRUCTURAL ENGINEER :
AECOM

FACADE CONSULTANT:
AECOM

NOTE :
1. ALL DIMENSIONS ARE IN mm.
2. ALL ELEVATIONS ARE VIEWED FROM OUTSIDE.
3. ALL DIMENSIONS TO BE VERIFIED ON SITE BEFORE FABRICATION.

LEGEND :
X1 / X001 — DETAIL MARK NO. / REFER SHEET NO.
1. F.F.L. --FINISHED FLOOR LEVEL
2. S.F.L. --STRUCTURAL FLOOR LEVEL
3. (R) --REVERSED DETAIL

NO.	DATE	REVISED	BY
G	16/07/2019	GENERAL REVISED	
F	26/05/2019	GENERAL REVISED	
E	17/01/2019	GENERAL REVISED	
D	22/12/2018	GENERAL REVISED	
C	04/12/2018	GENERAL REVISED	
B	24/11/2018	GENERAL REVISED	
A	10/9/2018	GENERAL REVISED	

JOB NO. : J-837

PROJECT :
URA KWUN TONG TOWN CENTRE REDEVELOPMENT (AREA 2 & 3) AT NKIL 6514, KWUN TONG, KWLOON

TITLE :
PART ELEVATION OF CURTAIN WALL AT TOWER 1

DATE : 04-JUL-18 | SCALE : 1:60 (A1)

DRAWN BY : ASING | CHECKED BY : –

美特鋁製有限公司
MIDI ALUMINIUM FABRICATOR LTD.
Units 6-8, Sunray Industrial Centre, 1/F
610 Cha Kwo Ling Road, Kowloon
Tel:23489211-4 Fax:(852)27727666

DWG NO. : J837-CW-2110 | REV. : G

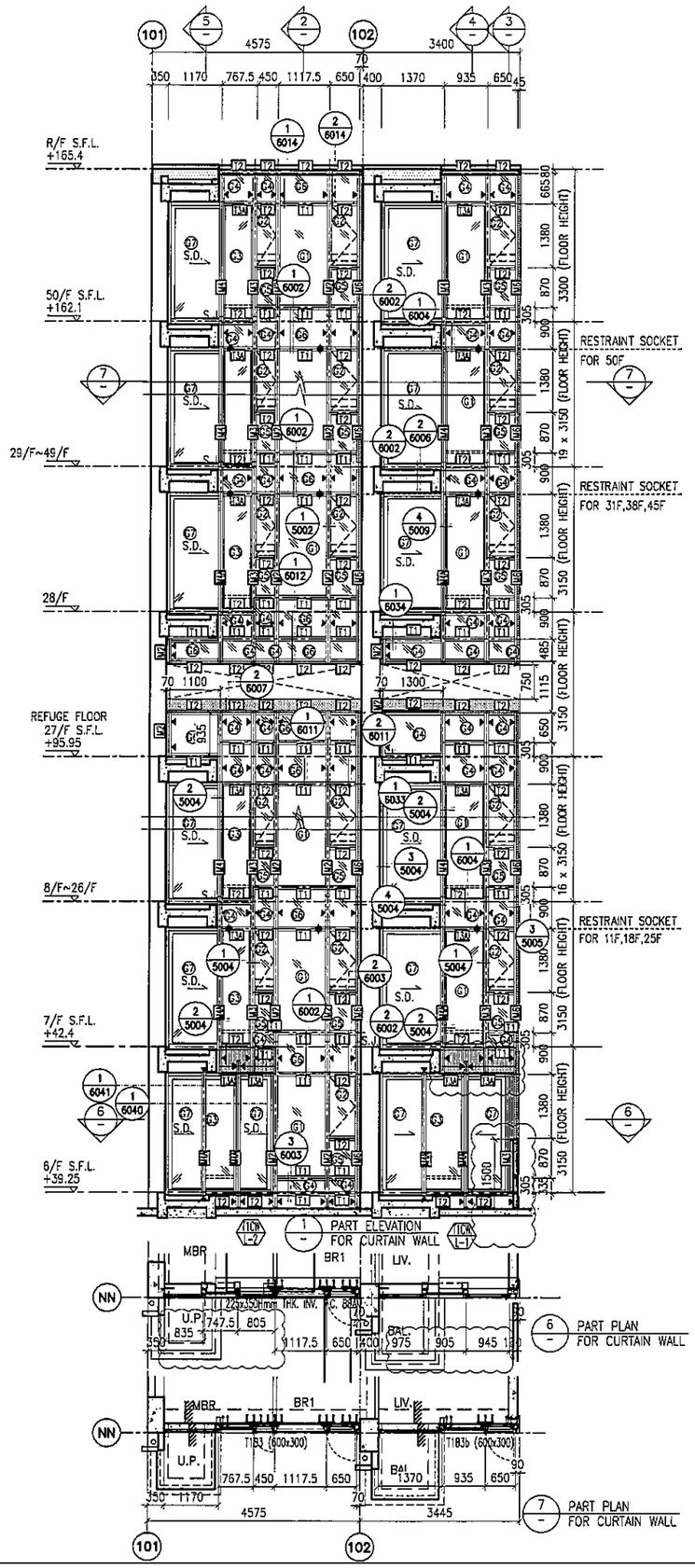

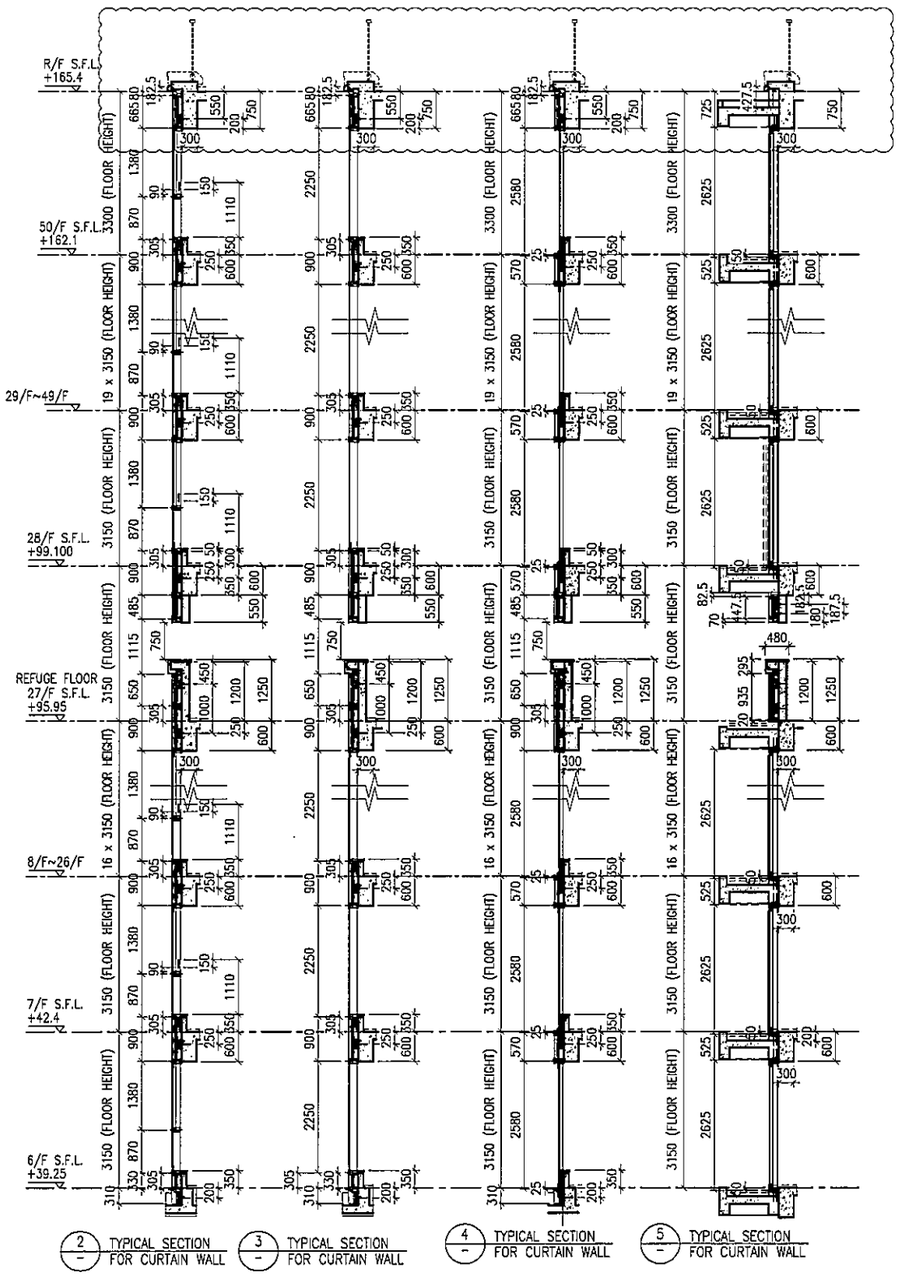

LEGEND:

- 10 mm THK. TEMPERED BLUE TINTED GLASS (OUTER) + 9 mm AIR SPACE + 8 mm THK. TEMPERED CLEAR GLASS (INNER)
- 8 mm THK. HEAT STRENGTHENED TINTED GLASS (OUTER)+ 9 mm AIR SPACE + 8 mm THK. HEAT STRENGTHENED CLEAR GLASS (INNER)
- 10 mm THK. HEAT STRENGTHENED BLUE TINTED GLASS (OUTER)+ 9 mm AIR SPACE + 8 mm THK. TEMPERED CLEAR GLASS (INNER)
- 8 mm THK. HEAT STRENGTHENED BLUE TINTED GLASS (SPANDREL GLASS)
- 8 mm THK. HEAT STRENGTHENED BLUE TINTED GLASS (OUTER)+ 9 mm AIR SPACE + 8 mm THK. TEMPERED CLEAR GLASS (INNER)
- 8 mm THK. TEMPERED BLUE TINTED GLASS (SPANDREL GLASS)
- 8 mm THK. HEAT STRENGTHENED TINTED GLASS (OUTER)+ 1.52PVB + 8 mm THK. HEAT STRENGTHENED CLEAR LAMINATED GLASS (INNER) 10 mm THK. TEMPERED GLASS (INTERNAL PROTECTIVE BARRIER)
- 3 mm THK. ALUM. CLADDING
- M.W. – MAINTENANCE WINDOW
- S.J. – STACK JOINT
- AE01 – ALUM. EXTRUSION DIE NO.
- ▲ – SUPPORT POINT
- ✦ – RESTRAINT SOCKET

B.D. REF :

CLIENT :
信和置業有限公司
Sino Land Company Limited

ARCHITECT :
WONG TUNG & PARTNERS LIMITED
ARCHITECTS & PLANNERS

MAIN CONTRACTOR :
CR Construction Company Limited

STRUCTURAL ENGINEER :
AECOM

FACADE CONSULTANT:
AECOM

NOTE :
1. ALL DIMENSIONS ARE IN mm.
2. ALL ELEVATIONS ARE VIEWED FROM OUTSIDE.
3. ALL DIMENSIONS TO BE VERIFIED ON SITE BEFORE FABRICATION.

LEGEND :
X1 – DETAIL MARK NO.
X001 – REFER SHEET NO.
1. F.F.L. – FINISHED FLOOR LEVEL
2. S.F.L. – STRUCTURAL FLOOR LEVEL
3. (R) – REVERSED DETAIL

NO.	DATE	REVISED	BY
G	16/07/2019	GENERAL REVISED	
F	26/05/2019	GENERAL REVISED	
E	17/01/2019	GENERAL REVISED	
D	22/12/2018	GENERAL REVISED	
C	04/12/2018	GENERAL REVISED	
B	24/11/2018	GENERAL REVISED	
A	10/9/2018	GENERAL REVISED	

JOB NO. : J-837

PROJECT :
URA KWUN TONG TOWN CENTRE REDEVELOPMENT (AREA 2 & 3) AT NKIL 6514, KWUN TONG, KWLOON

TITLE :
PART ELEVATION OF CURTAIN WALL AT TOWER 1

DATE : 04-JUL-18 | SCALE : 1:60 (A1)

DRAWN BY : ASING | CHECKED BY : –

美特鋁製有限公司
MIDI ALUMINIUM FABRICATOR LTD.
Units 6-8, Sunray Industrial Centre, 1/F
610 Cha Kwo Ling Road, Kowloon
Tel:23489211-4 Fax:(852)27727666

DWG NO. : J837-CW-2111 | REV. : G

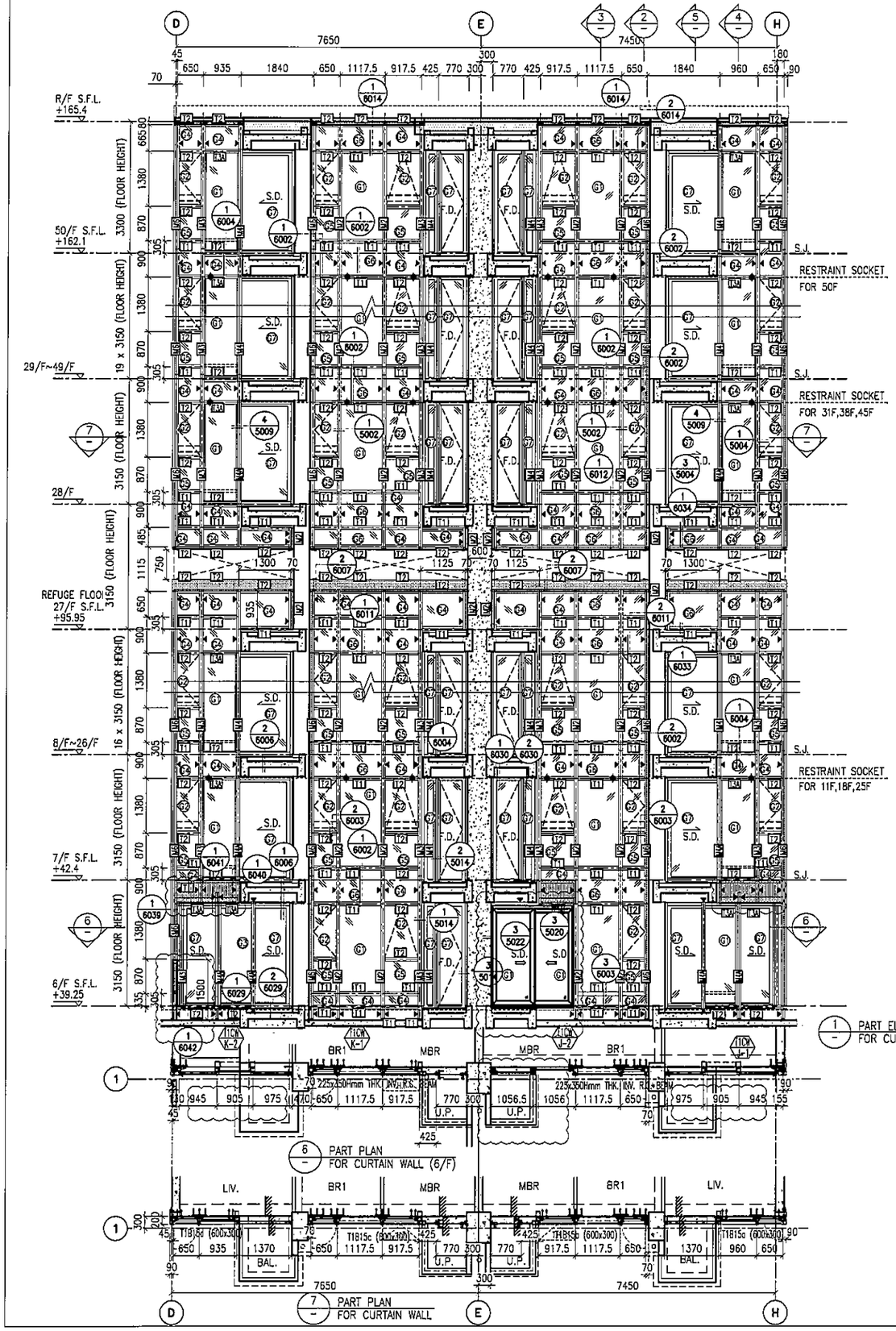

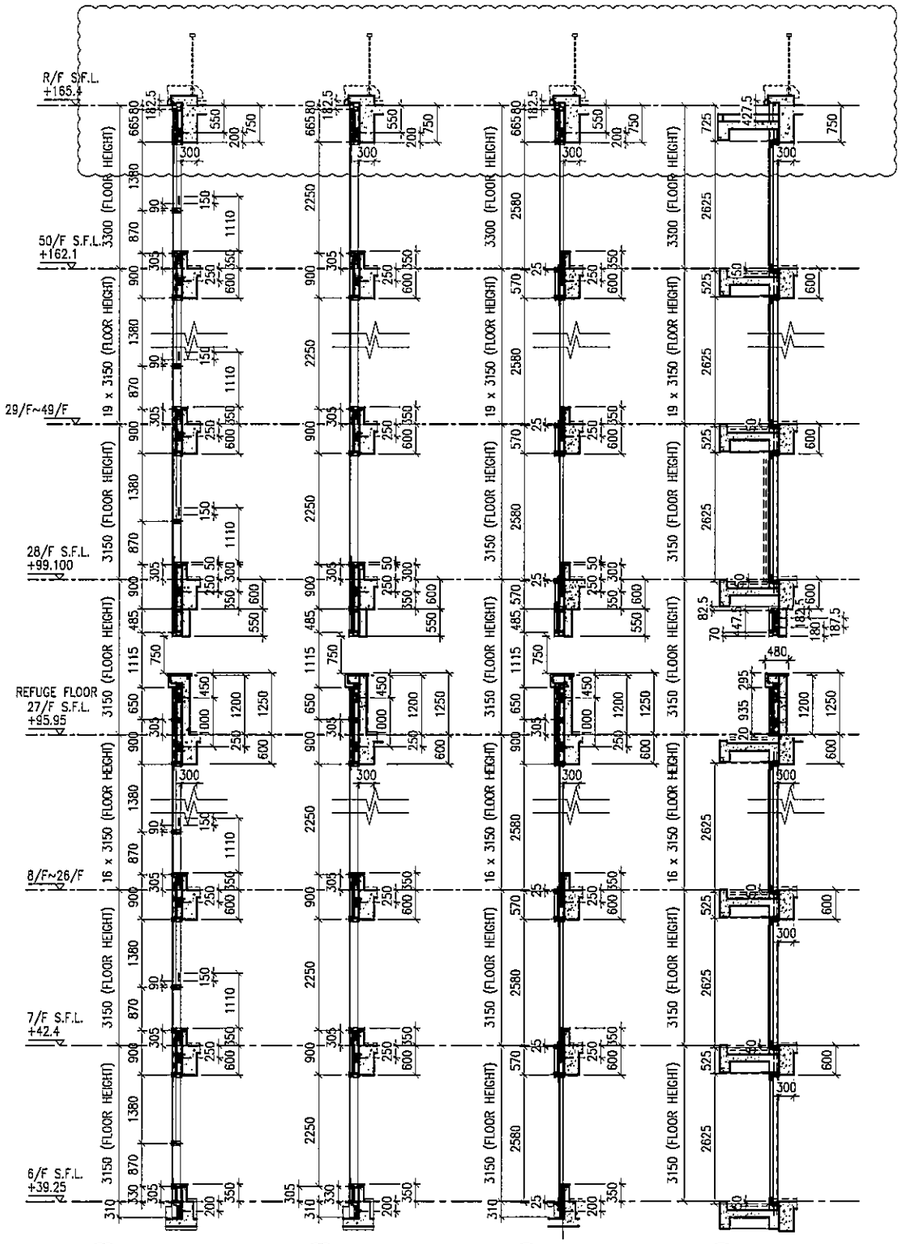

LEGEND:

- 10 mm THK. TEMPERED BLUE TINTED GLASS (OUTER) + 9 mm AIR SPACE + 8 mm THK. TEMPERED CLEAR GLASS (INNER)
- 8 mm THK. HEAT STRENGTHENED TINTED GLASS (OUTER)+ 9 mm AIR SPACE + 8 mm THK. HEAT STRENGTHENED CLEAR GLASS (INNER)
- 10 mm THK. HEAT STRENGTHENED BLUE TINTED GLASS (OUTER)+ 9 mm AIR SPACE + 8 mm THK. TEMPERED CLEAR GLASS (INNER)
- 8 mm THK. HEAT STRENGTHENED BLUE TINTED GLASS (SPANDREL GLASS)
- 8 mm THK. HEAT STRENGTHENED BLUE TINTED GLASS (OUTER)+ 9 mm AIR SPACE + 8 mm THK. TEMPERED CLEAR GLASS (INNER)
- 8 mm THK. TEMPERED BLUE TINTED GLASS (SPANDREL GLASS)
- 8 mm THK. HEAT STRENGTHENED TINTED GLASS (OUTER)+ 1.52PVB + 8 mm THK. HEAT STRENGTHENED CLEAR LAMINATED GLASS (INNER)
- 10 mm THK. TEMPERED GLASS (INTERNAL PROTECTIVE BARRIER)
- 3 mm THK. ALUM. CLADDING
- M.W. – MAINTENANCE WINDOW
- S.J. – STACK JOINT
- AE.01 – ALUM. EXTRUSION DIE NO.
- ▲ – SUPPORT POINT
- ✦ – RESTRAINT SOCKET

B.D. REF :

CLIENT :
信和置業有限公司
Sino Land Company Limited

ARCHITECT :
WONG TUNG & PARTNERS LIMITED
ARCHITECTS & PLANNERS

MAIN CONTRACTOR :
CR Construction Company Limited

STRUCTURAL ENGINEER :
AECOM

FACADE CONSULTANT:
AECOM

NOTE :
1. ALL DIMENSIONS ARE IN mm.
2. ALL ELEVATIONS ARE VIEWED FROM OUTSIDE.
3. ALL DIMENSIONS TO BE VERIFIED ON SITE BEFORE FABRICATION.

LEGEND :
X1 — DETAIL MARK NO.
X001 — REFER SHEET NO.
1. F.F.L. --FINISHED FLOOR LEVEL
2. S.F.L. --STRUCTURAL FLOOR LEVEL
3. (R) --REVERSED DETAIL

NO.	DATE	REVISED	BY
G	16/07/2019	GENERAL REVISED	
F	26/05/2019	GENERAL REVISED	
E	17/01/2019	GENERAL REVISED	
D	22/12/2018	GENERAL REVISED	
C	04/12/2018	GENERAL REVISED	
B	24/11/2018	GENERAL REVISED	
A	10/9/2018	GENERAL REVISED	

JOB NO. : J-837

PROJECT :
URA KWUN TONG TOWN CENTRE REDEVELOPMENT (AREA 2 & 3) AT NKIL 6514, KWUN TONG, KWLOON

TITLE :
PART ELEVATION OF CURTAIN WALL AT TOWER 1

DATE : 04-JUL-18 | SCALE : 1:60 (A1)

DRAWN BY : ASING | CHECKED BY : -

美特鋁質有限公司
MIDI ALUMINIUM FABRICATOR LTD.
Units 6-8, Sunray Industrial Centre, 1/F
610 Cha Kwo Ling Road, Kowloon
Tel:23489211-4 Fax:(852)27727666

DWG NO. : J837-CW-2112 | REV. : G

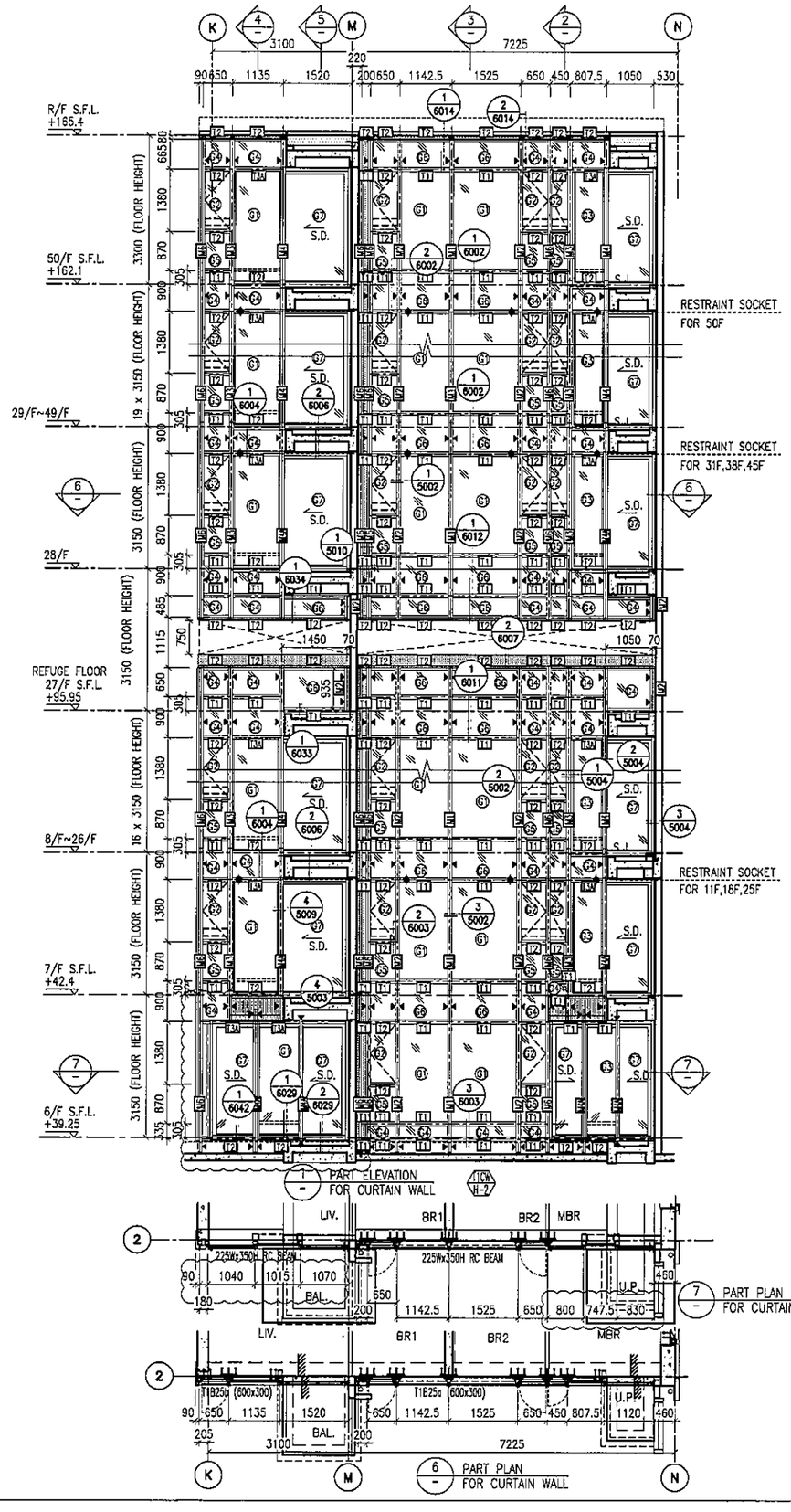

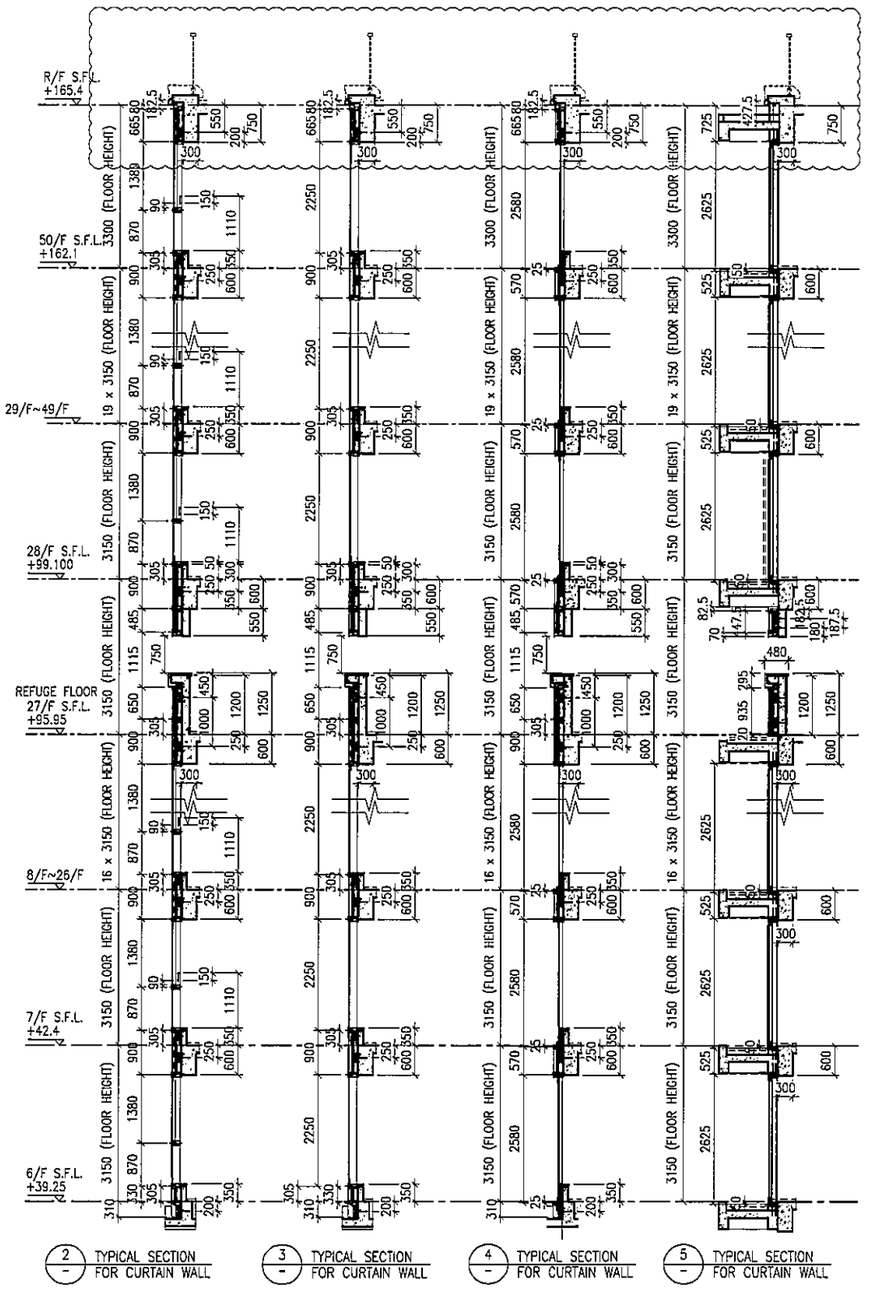

LEGEND:

- 10 mm THK. TEMPERED BLUE TINTED GLASS (OUTER) + 9 mm AIR SPACE + 8 mm THK. TEMPERED CLEAR GLASS (INNER)
- 8 mm THK. HEAT STRENGTHENED TINTED GLASS (OUTER)+ 9 mm AIR SPACE + 8 mm THK. HEAT STRENGTHENED CLEAR GLASS (INNER)
- 10 mm THK. HEAT STRENGTHENED BLUE TINTED GLASS (OUTER)+ 9 mm AIR SPACE + 8 mm THK. TEMPERED CLEAR GLASS (INNER)
- 8 mm THK. HEAT STRENGTHENED BLUE TINTED GLASS (SPANDREL GLASS)
- 8 mm THK. HEAT STRENGTHENED BLUE TINTED GLASS (OUTER)+ 9 mm AIR SPACE + 8 mm THK. TEMPERED CLEAR GLASS (INNER)
- 8 mm THK. TEMPERED BLUE TINTED GLASS (SPANDREL GLASS)
- 8 mm THK. HEAT STRENGTHENED TINTED GLASS (OUTER)+ 1.52PVB + 8 mm THK. HEAT STRENGTHENED CLEAR LAMINATED GLASS (INNER) 10 mm THK. TEMPERED GLASS (INTERNAL PROTECTIVE BARRIER)
- 3 mm THK. ALUM. CLADDING
- M.W. – MAINTENANCE WINDOW
- S.J. – STACK JOINT
- AE01 – ALUM. EXTRUSION DIE NO.
- ▲ – SUPPORT POINT
- ◆ – RESTRAINT SOCKET

B.D. REF :

CLIENT :
信和置業有限公司
Sino Land Company Limited

ARCHITECT : WONG TUNG & PARTNERS LIMITED ARCHITECTS & PLANNERS

MAIN CONTRACTOR :
CR Construction Company Limited

STRUCTURAL ENGINEER : AECOM

FACADE CONSULTANT: AECOM

NOTE :
1. ALL DIMENSIONS ARE IN mm.
2. ALL ELEVATIONS ARE VIEWED FROM OUTSIDE.
3. ALL DIMENSIONS TO BE VERIFIED ON SITE BEFORE FABRICATION.

LEGEND :
- X1 / X001 – DETAIL MARK NO. / REFER SHEET NO.
1. F.F.L. --FINISHED FLOOR LEVEL
2. S.F.L. --STRUCTURAL FLOOR LEVEL
3. /R – REVERSED DETAIL

NO.	DATE	REVISED	BY
G	16/07/2019	GENERAL REVISED	
F	26/05/2019	GENERAL REVISED	
E	17/01/2019	GENERAL REVISED	
D	22/12/2018	GENERAL REVISED	
C	04/12/2018	GENERAL REVISED	
B	24/11/2018	GENERAL REVISED	
A	10/9/2018	GENERAL REVISED	

JOB NO. : J-837

PROJECT :
URA KWUN TONG TOWN CENTRE REDEVELOPMENT (AREA 2 & 3) AT NKIL 6514, KWUN TONG, KWLOON

TITLE :
PART ELEVATION OF CURTAIN WALL AT TOWER 1

DATE : 04-JUL-18 | SCALE : 1:60 (A1)

DRAWN BY : ASING | CHECKED BY : –

美特鋁質有限公司
MIDI ALUMINIUM FABRICATOR LTD.
Units 6-8, Sunray Industrial Centre, 1/F
610 Cha Kwo Ling Road, Kowloon
Tel:23489211-4 Fax:(852)27727666

DWG NO. : J837-CW-2113 | REV. : G

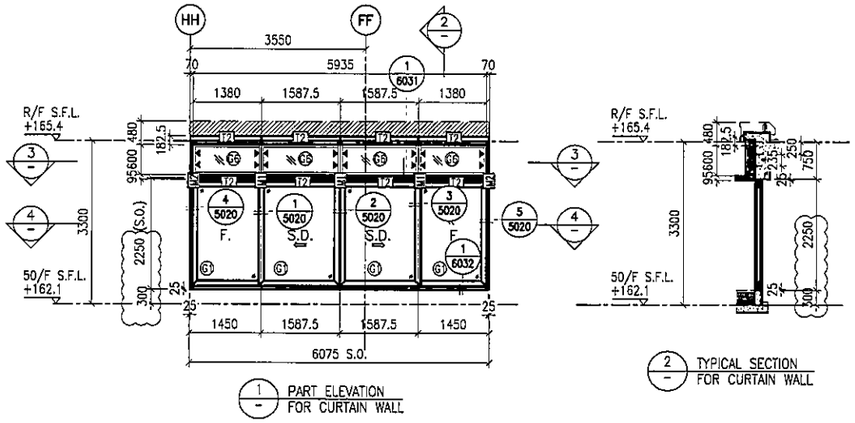

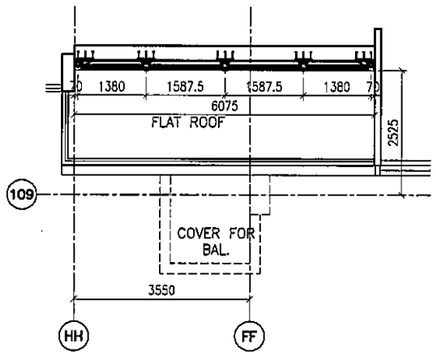

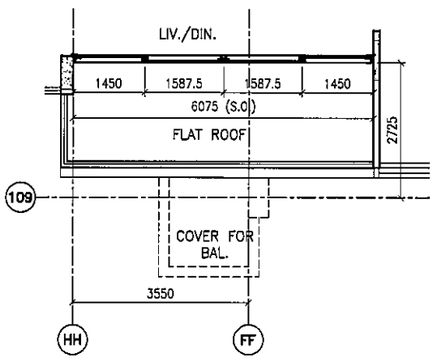

LEGEND:

- G1 – 10 mm THK. TEMPERED BLUE TINTED GLASS (OUTER) + 9 mm AIR SPACE + 8 mm THK. TEMPERED CLEAR GLASS (INNER)
- G2 – 8 mm THK. HEAT STRENGTHENED TINTED GLASS (OUTER)+ 9 mm AIR SPACE + 8 mm THK. HEAT STRENGTHENED CLEAR GLASS (INNER)
- G3 – 10 mm THK. HEAT STRENGTHENED BLUE TINTED GLASS (OUTER)+ 9 mm AIR SPACE + 8 mm THK. TEMPERED CLEAR GLASS (INNER)
- G4 – 8 mm THK. HEAT STRENGTHENED BLUE TINTED GLASS (SPANDREL GLASS)
- G5 – 8 mm THK. HEAT STRENGTHENED BLUE TINTED GLASS (OUTER)+ 9 mm AIR SPACE + 8 mm THK. TEMPERED CLEAR GLASS (INNER)
- G6 – 8 mm THK. TEMPERED BLUE TINTED GLASS (SPANDREL GLASS)
- G7 – 8 mm THK. HEAT STRENGTHENED TINTED GLASS (OUTER)+ 1.52PVB + 8 mm THK. HEAT STRENGTHENED CLEAR LAMINATED GLASS (INNER)
- 10 mm THK. TEMPERED GLASS (INTERNAL PROTECTIVE BARRIER)
- 3 mm THK. ALUM. CLADDING
- M.W. – MAINTENANCE WINDOW
- S.J. – STACK JOINT
- AE01 – ALUM. EXTRUSION DIE NO.
- ▲ – SUPPORT POINT
- ✦ – RESTRAINT SOCKET

B.D. REF :

CLIENT :
信和置業有限公司
Sino Land Company Limited

ARCHITECT : WONG TUNG & PARTNERS LIMITED
ARCHITECTS & PLANNERS

MAIN CONTRACTOR :
CR Construction Company Limited

STRUCTURAL ENGINEER :
AECOM

FACADE CONSULTANT:
AECOM

NOTE :
1. ALL DIMENSIONS ARE IN mm.
2. ALL ELEVATIONS ARE VIEWED FROM OUTSIDE.
3. ALL DIMENSIONS TO BE VERIFIED ON SITE BEFORE FABRICATION.

LEGEND :
X1 / X001 — DETAIL MARK NO. / REFER SHEET NO.
1. F.F.L. --FINISHED FLOOR LEVEL
2. S.F.L. --STRUCTURAL FLOOR LEVEL
3. (/R) --REVERSED DETAIL

NO.	DATE	REVISED	BY
B	16/07/2019	GENERAL REVISED	
A	26/05/2019	GENERAL REVISED	

JOB NO. : J-837

PROJECT :
URA KWUN TONG TOWN CENTRE REDEVELOPMENT (AREA 2 & 3) AT NKIL 6514, KWUN TONG, KWLOON

TITLE :
PART ELEVATION OF CURTAIN WALL AT TOWER 1

DATE : 18-FEB-19 | SCALE : 1:60 (A1)

DRAWN BY : ASING | CHECKED BY : -

美特鋁質有限公司
MIDI ALUMINIUM FABRICATOR LTD.
Units 6-8, Sunray Industrial Centre, 1/F
610 Cha Kwo Ling Road, Kowloon
Tel:23489211-4 Fax:(852)27727666

DWG NO. : J837-CW-2114 | REV. : B

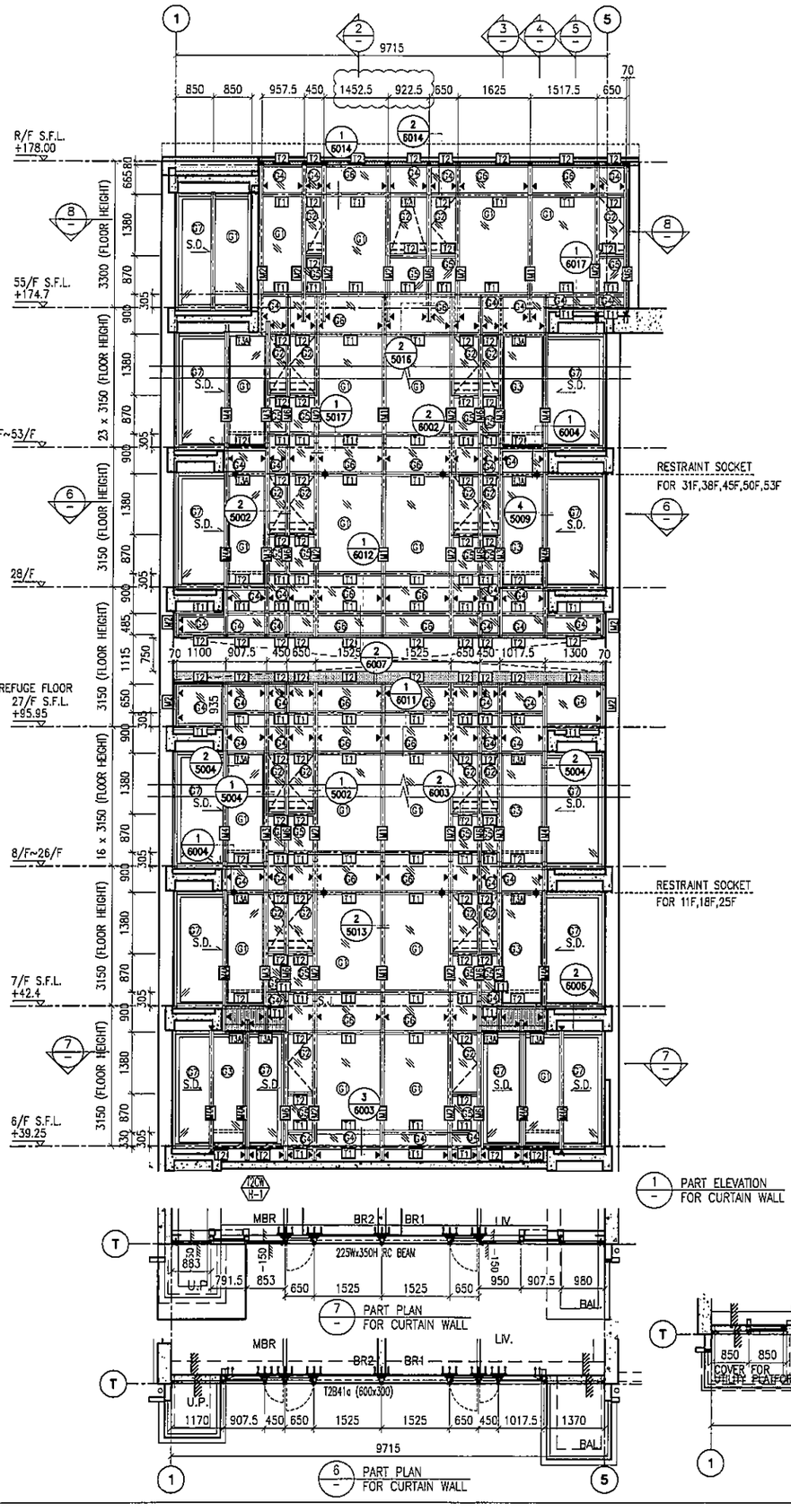

1 PART ELEVATION FOR CURTAIN WALL

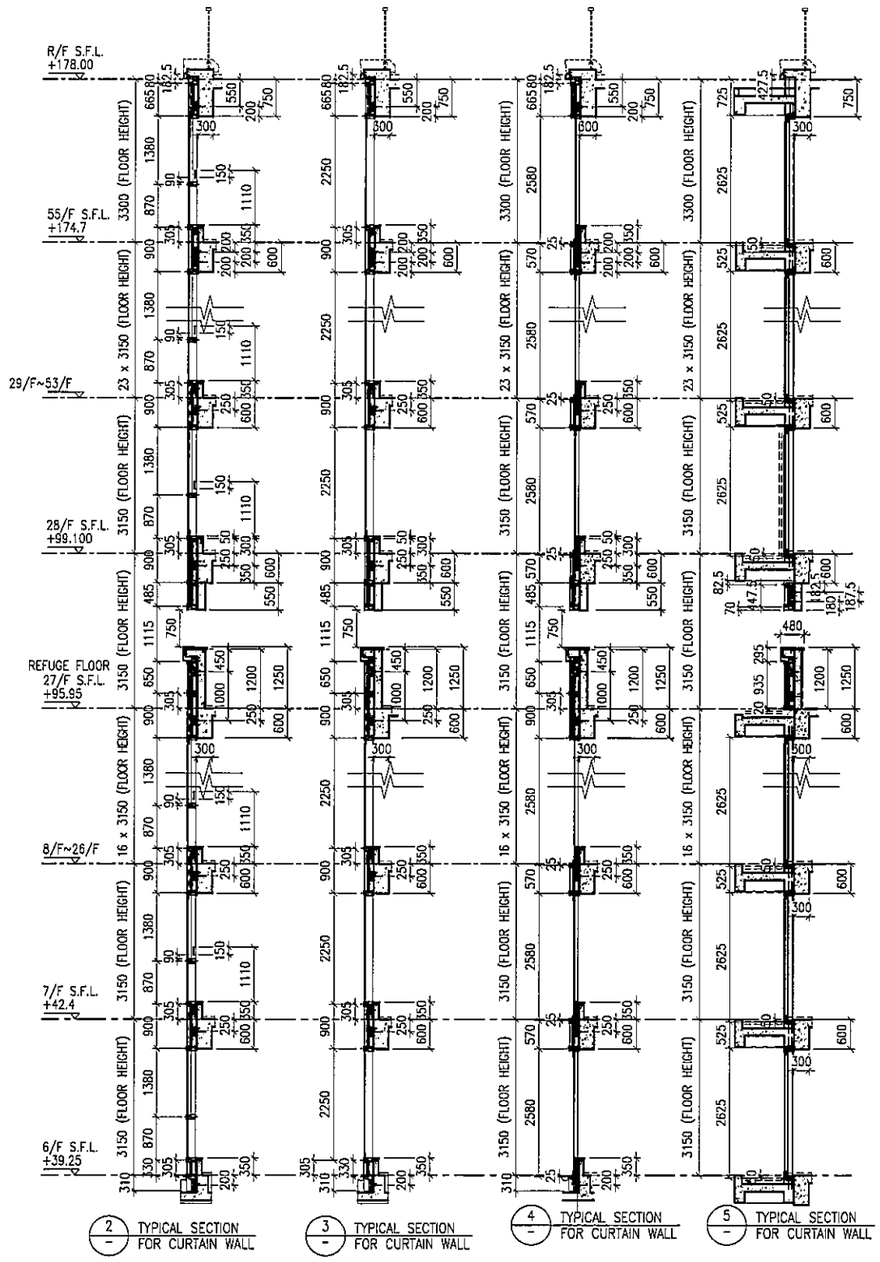

2 TYPICAL SECTION FOR CURTAIN WALL

3 TYPICAL SECTION FOR CURTAIN WALL

4 TYPICAL SECTION FOR CURTAIN WALL

5 TYPICAL SECTION FOR CURTAIN WALL

7 PART PLAN FOR CURTAIN WALL

6 PART PLAN FOR CURTAIN WALL

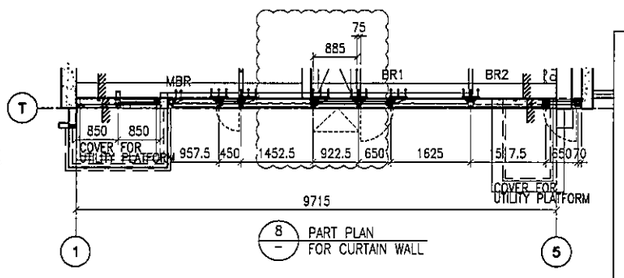

8 PART PLAN FOR CURTAIN WALL

LEGEND:

- 10 mm THK. TEMPERED BLUE TINTED GLASS (OUTER) + 9 mm AIR SPACE + 8 mm THK. TEMPERED CLEAR GLASS (INNER)
- 8 mm THK. HEAT STRENGTHENED TINTED GLASS (OUTER)+ 9 mm AIR SPACE + 8 mm THK. HEAT STRENGTHENED CLEAR GLASS (INNER)
- 10 mm THK. HEAT STRENGTHENED BLUE TINTED GLASS (OUTER)+ 9 mm AIR SPACE + 8 mm THK. TEMPERED CLEAR GLASS (INNER)
- 8 mm THK. HEAT STRENGTHENED BLUE TINTED GLASS (SPANDREL GLASS)
- 8 mm THK. HEAT STRENGTHENED BLUE TINTED GLASS (OUTER)+ 9 mm AIR SPACE + 8 mm THK. TEMPERED CLEAR GLASS (INNER)
- 8 mm THK. TEMPERED BLUE TINTED GLASS (SPANDREL GLASS)
- 8 mm THK. HEAT STRENGTHENED TINTED GLASS (OUTER)+ 1.52PVB + 8 mm THK. HEAT STRENGTHENED CLEAR LAMINATED GLASS (INNER) 10 mm THK. TEMPERED GLASS (INTERNAL PROTECTIVE BARRIER)
- 3 mm THK. ALUM. CLADDING
- M.W. – MAINTENANCE WINDOW
- S.J. – STACK JOINT
- AE01 – ALUM. EXTRUSION DIE NO.
- ▲ – SUPPORT POINT
- ◆ – RESTRAINT SOCKET

B.D. REF :

CLIENT :
信和置業有限公司
Sino Land Company Limited

ARCHITECT :
WONG TUNG & PARTNERS LIMITED
ARCHITECTS & PLANNERS

MAIN CONTRACTOR :
CR Construction Company Limited

STRUCTURAL ENGINEER :
AECOM

FACADE CONSULTANT:
AECOM

NOTE :
1. ALL DIMENSIONS ARE IN mm.
2. ALL ELEVATIONS ARE VIEWED FROM OUTSIDE.
3. ALL DIMENSIONS TO BE VERIFIED ON SITE BEFORE FABRICATION.

LEGEND :
- X1 / X001 – DETAIL MARK NO. / REFER SHEET NO.
1. F.F.L. --FINISHED FLOOR LEVEL
2. S.F.L. --STRUCTURAL FLOOR LEVEL
3. (R) --REVERSED DETAIL

NO.	DATE	REVISED	BY
I	02/08/2019	GENERAL REVISED	
H	16/07/2019	GENERAL REVISED	
G	26/05/2019	GENERAL REVISED	
F	07/04/2019	GENERAL REVISED	
E	17/01/2019	GENERAL REVISED	
D	22/12/2018	GENERAL REVISED	
C	04/12/2018	GENERAL REVISED	
B	24/11/2018	GENERAL REVISED	
A	10/9/2018	GENERAL REVISED	

JOB NO. : J-837

PROJECT :
URA KWUN TONG TOWN CENTRE REDEVELOPMENT (AREA 2 & 3) AT NKIL 6514, KWUN TONG, KWLOON

TITLE :
PART ELEVATION OF CURTAIN WALL AT TOWER 2

DATE : 04-JUL-18	SCALE : 1:60 (A1)
DRAWN BY : ASING	CHECKED BY : –

美特鋁質有限公司
MIDI ALUMINIUM FABRICATOR LTD.
Units 6-8, Sunray Industrial Centre, 1/F
610 Cha Kwo Ling Road, Kowloon
Tel:23489211-4 Fax:(852)27727666

DWG NO. : JB37-CW-2201 REV. : I

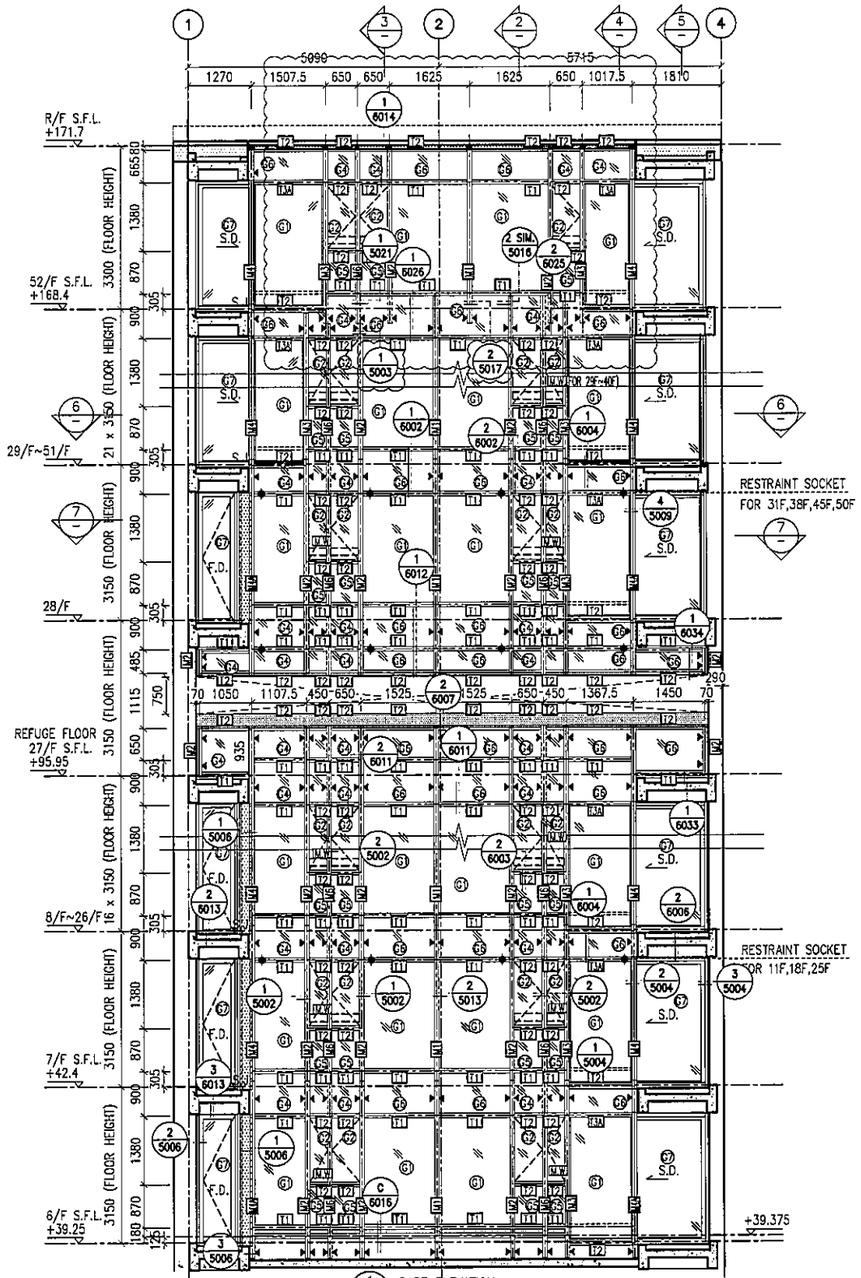

1 PART ELEVATION FOR CURTAIN WALL

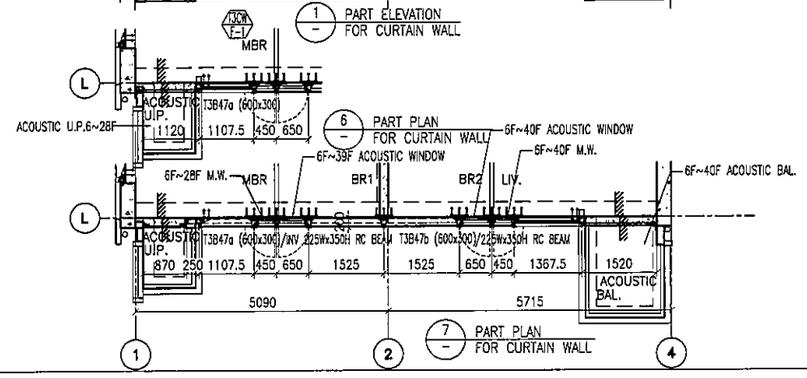

6 PART PLAN FOR CURTAIN WALL

7 PART PLAN FOR CURTAIN WALL

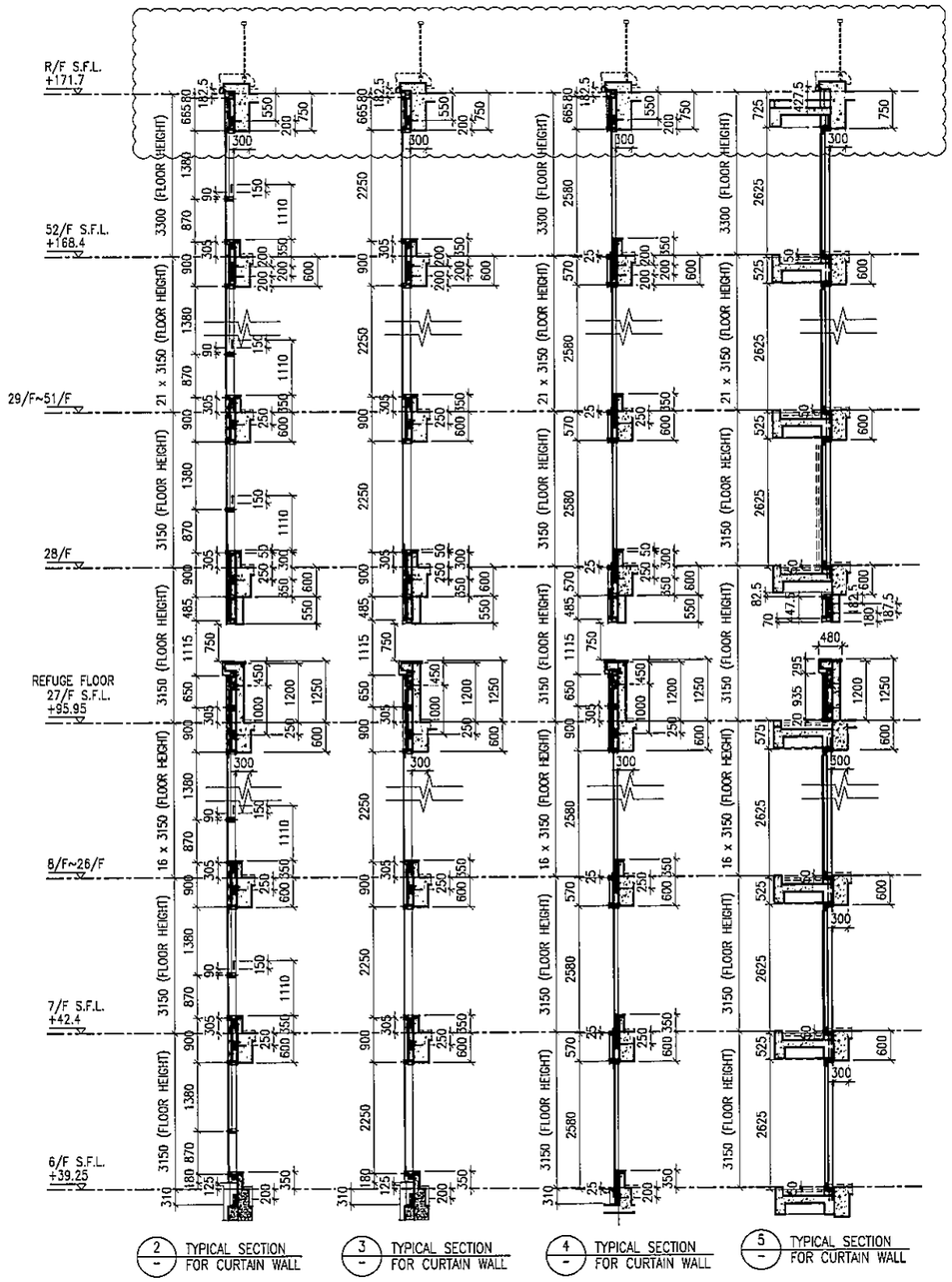

2 TYPICAL SECTION FOR CURTAIN WALL

3 TYPICAL SECTION FOR CURTAIN WALL

4 TYPICAL SECTION FOR CURTAIN WALL

5 TYPICAL SECTION FOR CURTAIN WALL

LEGEND:

- G1 – 10 mm THK. TEMPERED BLUE TINTED GLASS (OUTER) + 9 mm AIR SPACE + 8 mm THK. TEMPERED CLEAR GLASS (INNER)
- G2 – 8 mm THK. HEAT STRENGTHENED TINTED GLASS (OUTER)+ 9 mm AIR SPACE + 8 mm THK. HEAT STRENGTHENED CLEAR GLASS (INNER)
- G3 – 10 mm THK. HEAT STRENGTHENED BLUE TINTED GLASS (OUTER)+ 9 mm AIR SPACE + 8 mm THK. TEMPERED CLEAR GLASS (INNER)
- G4 – 8 mm THK. HEAT STRENGTHENED BLUE TINTED GLASS (SPANDREL GLASS)
- G5 – 8 mm THK. HEAT STRENGTHENED BLUE TINTED GLASS (OUTER)+ 9 mm AIR SPACE + 8 mm THK. TEMPERED CLEAR GLASS (INNER)
- G6 – 8 mm THK. TEMPERED BLUE TINTED GLASS (SPANDREL GLASS)
- G7 – 8 mm THK. HEAT STRENGTHENED TINTED GLASS (OUTER)+ 1.52PVB + 8 mm THK. HEAT STRENGTHENED CLEAR LAMINATED GLASS (INNER)
- 10 mm THK. TEMPERED GLASS (INTERNAL PROTECTIVE BARRIER)
- 3 mm THK. ALUM. CLADDING
- M.W. – MAINTENANCE WINDOW
- S.J. – STACK JOINT
- AE-01 – ALUM. EXTRUSION DIE NO.
- ▲ – SUPPORT POINT
- ◆ – RESTRAINT SOCKET

B.D. REF :

CLIENT :
信和置業有限公司
Sino Land Company Limited

ARCHITECT :
WONG TUNG & PARTNERS LIMITED
ARCHITECTS & PLANNERS

MAIN CONTRACTOR :
CR Construction Company Limited

STRUCTURAL ENGINEER :
AECOM

FACADE CONSULTANT:
AECOM

NOTE :
1. ALL DIMENSIONS ARE IN mm.
2. ALL ELEVATIONS ARE VIEWED FROM OUTSIDE.
3. ALL DIMENSIONS TO BE VERIFIED ON SITE BEFORE FABRICATION.

LEGEND :
- X1 / X001 – DETAIL MARK NO. / REFER SHEET NO.
1. F.F.L. --FINISHED FLOOR LEVEL
2. S.F.L. --STRUCTURAL FLOOR LEVEL
3. (R) --REVERSED DETAIL

NO.	DATE	REVISED	BY
H	16/07/2019	GENERAL REVISED	
G	26/5/2019	GENERAL REVISED	
F	6/3/2019	GENERAL REVISED	
E	17/01/2019	GENERAL REVISED	
D	22/12/2018	GENERAL REVISED	
C	04/12/2018	GENERAL REVISED	
B	24/11/2018	GENERAL REVISED	
A	10/9/2018	GENERAL REVISED	

JOB NO. : J-837

PROJECT :
URA KWUN TONG TOWN CENTRE REDEVELOPMENT (AREA 2 & 3) AT NKIL 6514, KWUN TONG, KWLOON

TITLE :
PART ELEVATION OF CURTAIN WALL AT TOWER 3

DATE : 04-JUL-18	SCALE : 1:60 (A1)
DRAWN BY : ASING	CHECKED BY : -

美特鋁質有限公司
MIDI ALUMINIUM FABRICATOR LTD.
Units 6-8, Sunray Industrial Centre, 1/F
610 Cha Kwo Ling Road, Kowloon
Tel:23489211-4 Fax:(852)27727666

DWG NO. : J837-CW-2301 REV. : H

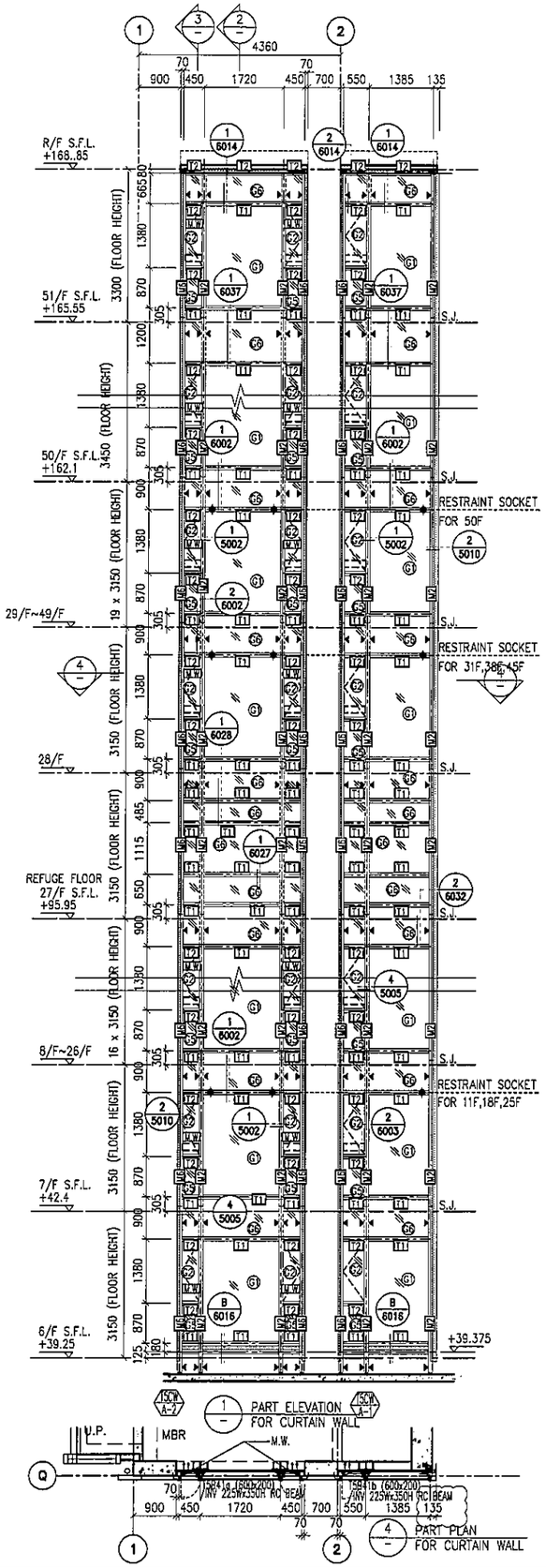

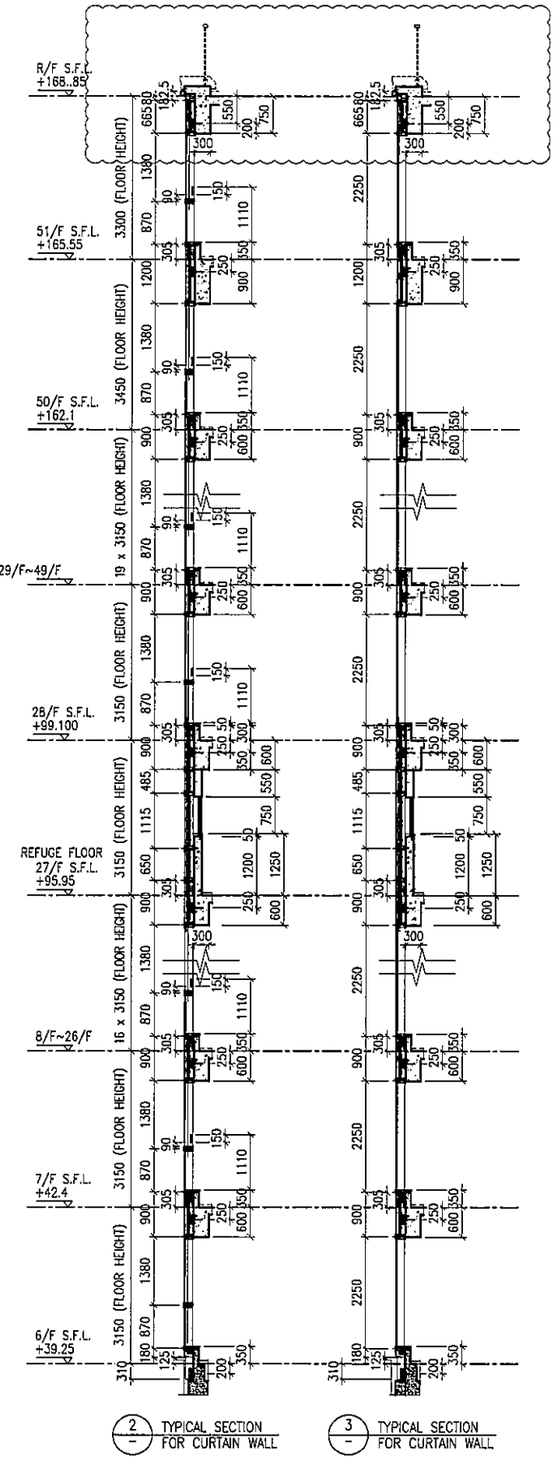

LEGEND:

- G1+ – 10 mm THK. TEMPERED BLUE TINTED GLASS (OUTER) + 9 mm AIR SPACE + 8 mm THK. TEMPERED CLEAR GLASS (INNER)
- G2+ – 8 mm THK. HEAT STRENGTHENED TINTED GLASS (OUTER)+ 9 mm AIR SPACE + 8 mm THK. HEAT STRENGTHENED CLEAR GLASS (INNER)
- G3+ – 10 mm THK. HEAT STRENGTHENED BLUE TINTED GLASS (OUTER)+ 9 mm AIR SPACE + 8 mm THK. TEMPERED CLEAR GLASS (INNER)
- G4+ – 8 mm THK. HEAT STRENGTHENED BLUE TINTED GLASS (SPANDREL GLASS)
- G5+ – 8 mm THK. HEAT STRENGTHENED BLUE TINTED GLASS (OUTER)+ 9 mm AIR SPACE + 8 mm THK. TEMPERED CLEAR GLASS (INNER)
- G6+ – 8 mm THK. TEMPERED BLUE TINTED GLASS (SPANDREL GLASS)
- G7+ – 8 mm THK. HEAT STRENGTHENED TINTED GLASS (OUTER)+ 1.52PVB + 8 mm THK. HEAT STRENGTHENED CLEAR LAMINATED GLASS (INNER)
- 10 mm THK. TEMPERED GLASS (INTERNAL PROTECTIVE BARRIER)
- 3 mm THK. ALUM. CLADDING
- M.W. – MAINTENANCE WINDOW
- S.J. – STACK JOINT
- AE01 – ALUM. EXTRUSION DIE NO.
- ▲ – SUPPORT POINT
- ✦ – RESTRAINT SOCKET

B.D. REF :

CLIENT :
信和置業有限公司
Sino Land Company Limited

ARCHITECT :
WONG TUNG & PARTNERS LIMITED
ARCHITECTS & PLANNERS

MAIN CONTRACTOR :
CR Construction Company Limited

STRUCTURAL ENGINEER :
AECOM

FACADE CONSULTANT:
AECOM

NOTE :
1. ALL DIMENSIONS ARE IN mm.
2. ALL ELEVATIONS ARE VIEWED FROM OUTSIDE.
3. ALL DIMENSIONS TO BE VERIFIED ON SITE BEFORE FABRICATION.

LEGEND :
- X1 / X001 — DETAIL MARK NO. / REFER SHEET NO.
1. F.F.L. --FINISHED FLOOR LEVEL
2. S.F.L. --STRUCTURAL FLOOR LEVEL
3. /R --REVERSED DETAIL

NO.	DATE	REVISED	BY
F	16/07/2019	GENERAL REVISED	
E	17/01/2019	GENERAL REVISED	
D	22/12/2018	GENERAL REVISED	
C	04/12/2018	GENERAL REVISED	
B	24/11/2018	GENERAL REVISED	
A	10/9/2018	GENERAL REVISED	

JOB NO. : J-837

PROJECT :
URA KWUN TONG TOWN CENTRE REDEVELOPMENT (AREA 2 & 3) AT NKIL 6514, KWUN TONG, KWLOON

TITLE :
PART ELEVATION OF CURTAIN WALL AT TOWER 5

DATE : 04-JUL-18 | SCALE : 1:60 (A1)

DRAWN BY : ASING | CHECKED BY : -

美特鋁製有限公司
MIDI ALUMINIUM FABRICATOR LTD.
Units 6-8, Sunray Industrial Centre, 1/F
610 Cha Kwo Ling Road, Kowloon
Tel:23489211-4 Fax:(852)27727686

DWG NO. : J837-CW-2501 | REV. : F

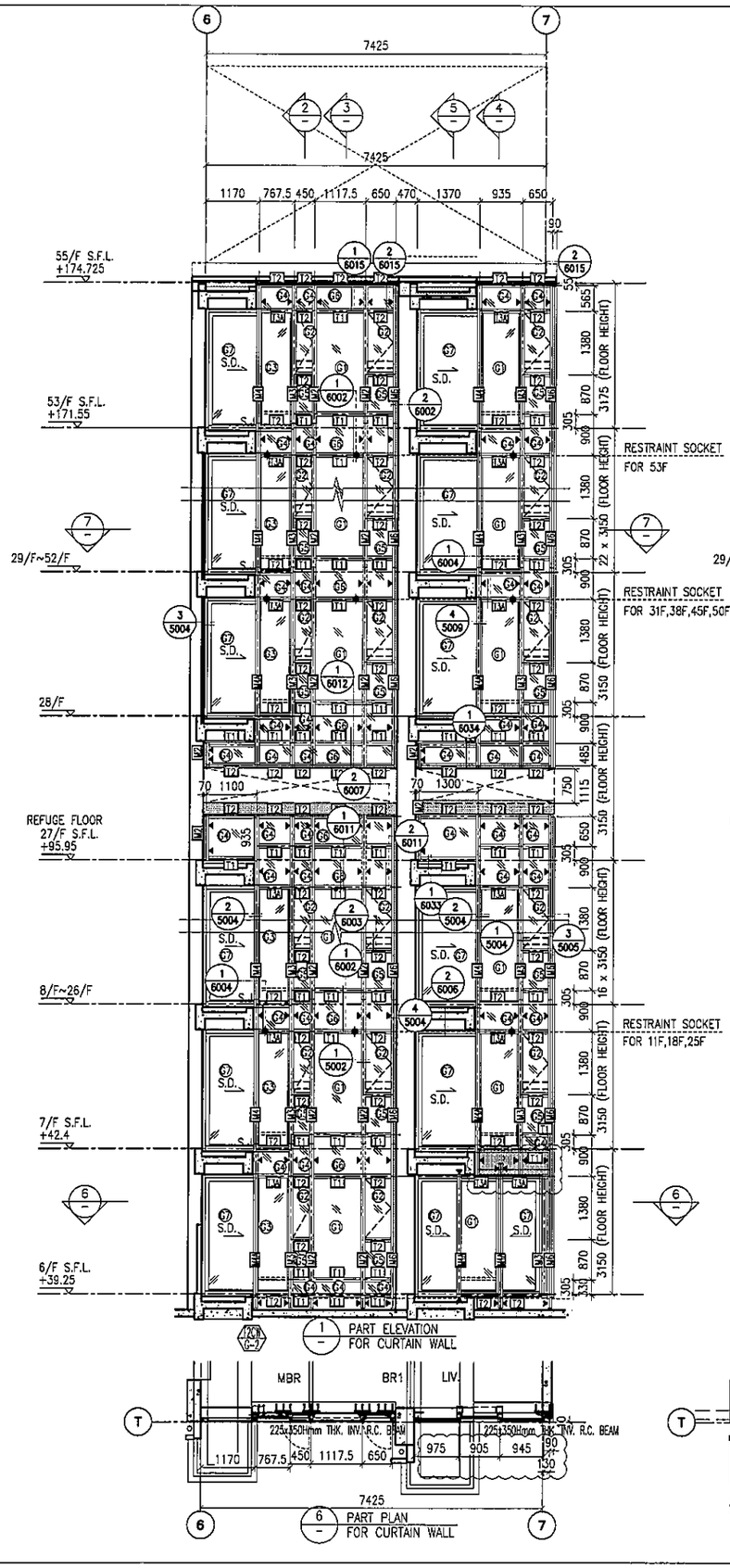

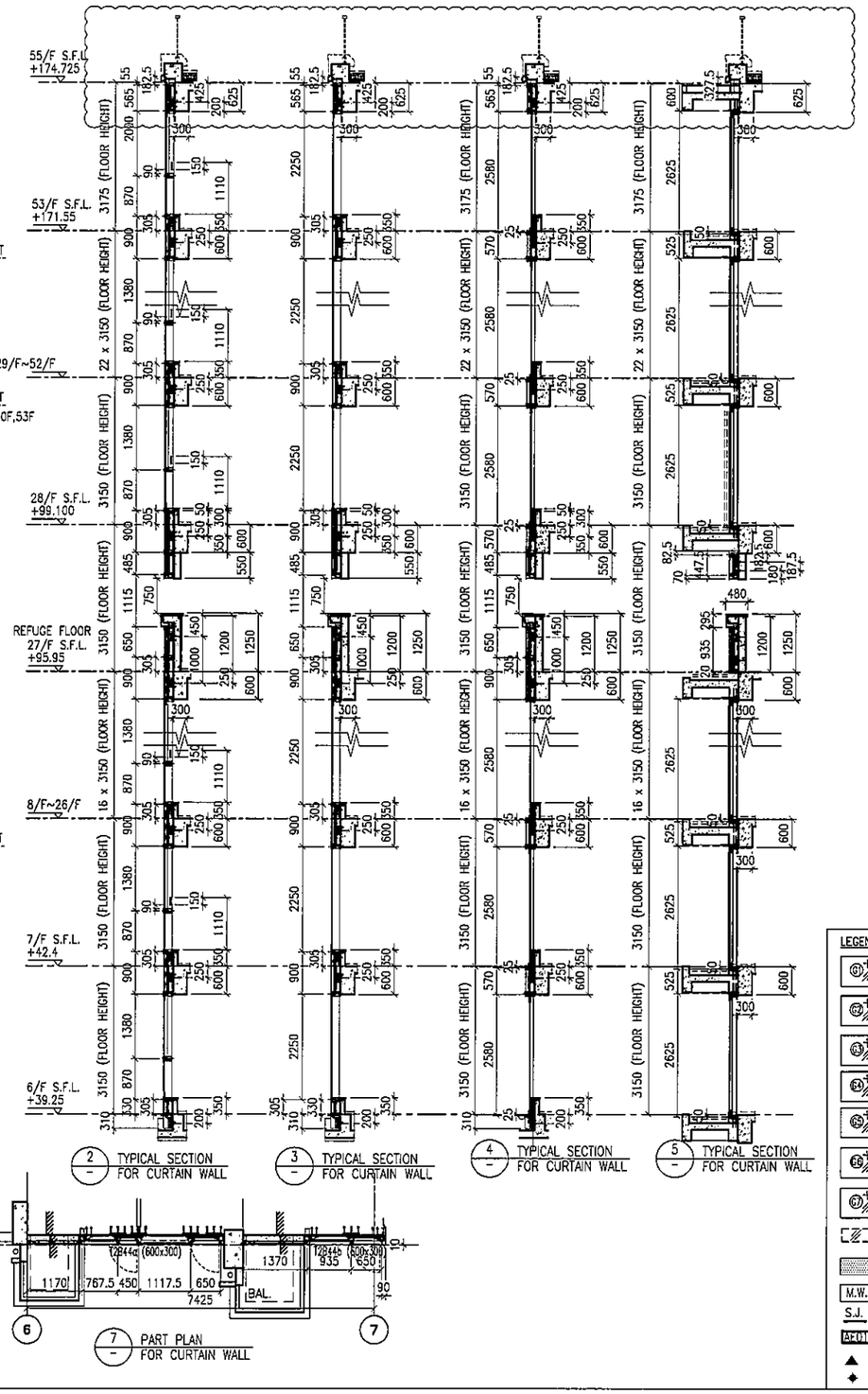

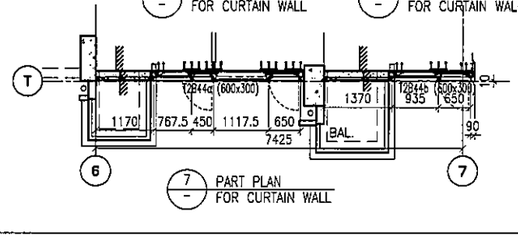

LEGEND:

- G1+ – 10 mm THK. TEMPERED BLUE TINTED GLASS (OUTER) + 9 mm AIR SPACE + 8 mm THK. TEMPERED CLEAR GLASS (INNER)
- G2+ – 8 mm THK. HEAT STRENGTHENED TINTED GLASS (OUTER)+ 9 mm AIR SPACE + 8 mm THK. HEAT STRENGTHENED CLEAR GLASS (INNER)
- G3+ – 10 mm THK. HEAT STRENGTHENED BLUE TINTED GLASS (OUTER)+ 9 mm AIR SPACE + 8 mm THK. TEMPERED CLEAR GLASS (INNER)
- G4+ – 8 mm THK. HEAT STRENGTHENED BLUE TINTED GLASS (SPANDREL GLASS)
- G5+ – 8 mm THK. HEAT STRENGTHENED BLUE TINTED GLASS (OUTER)+ 9 mm AIR SPACE + 8 mm THK. TEMPERED CLEAR GLASS (INNER)
- G6+ – 8 mm THK. TEMPERED BLUE TINTED GLASS (SPANDREL GLASS)
- G7+ – 8 mm THK. HEAT STRENGTHENED TINTED GLASS (OUTER)+ 1.52PVB + 8 mm THK. HEAT STRENGTHENED CLEAR LAMINATED GLASS (INNER)
- 10 mm THK. TEMPERED GLASS (INTERNAL PROTECTIVE BARRIER)
- 3 mm THK. ALUM. CLADDING
- M.W. – MAINTENANCE WINDOW
- S.J. – STACK JOINT
- AP01 – ALUM. EXTRUSION DIE NO.
- ▲ – SUPPORT POINT
- ◆ – RESTRAINT SOCKET

B.O. REF :

CLIENT :
信和置業有限公司
Sino Land Company Limited

ARCHITECT :
WONG TUNG & PARTNERS LIMITED
ARCHITECTS & PLANNERS

MAIN CONTRACTOR :
CR Construction Company Limited

STRUCTURAL ENGINEER :
AECOM

FACADE CONSULTANT:
AECOM

NOTE :
1. ALL DIMENSIONS ARE IN mm.
2. ALL ELEVATIONS ARE VIEWED FROM OUTSIDE.
3. ALL DIMENSIONS TO BE VERIFIED ON SITE BEFORE FABRICATION.

LEGEND :
- X1 / XC01 — DETAIL MARK NO. / REFER SHEET NO.
1. F.F.L. --FINISHED FLOOR LEVEL
2. S.F.L. --STRUCTURAL FLOOR LEVEL
3. (R) --REVERSED DETAIL

NO.	DATE	REVISED	BY
G	16/07/2019	GENERAL REVISED	
F	26/05/2019	GENERAL REVISED	
E	17/01/2019	GENERAL REVISED	
D	22/12/2018	GENERAL REVISED	
C	04/12/2018	GENERAL REVISED	
B	24/11/2018	GENERAL REVISED	
A	10/9/2018	GENERAL REVISED	

JOB NO. : J-837

PROJECT :
URA KWUN TONG TOWN CENTRE REDEVELOPMENT (AREA 2 & 3) AT NKIL 6514, KWUN TONG, KWLOON

TITLE :
PART ELEVATION OF CURTAIN WALL AT TOWER 2

DATE : 04-JUL-18 | SCALE : 1:60 (A1)

DRAWN BY : ASING | CHECKED BY : --

美特鋁質有限公司
MIDI ALUMINIUM FABRICATOR LTD.
Units 6-8, Sunray Industrial Centre, 1/F
610 Cha Kwo Ling Road, Kowloon
Tel:23489211-4 Fax:(852)27727666

DWG NO. : J837-CW-2202 | REV. : G

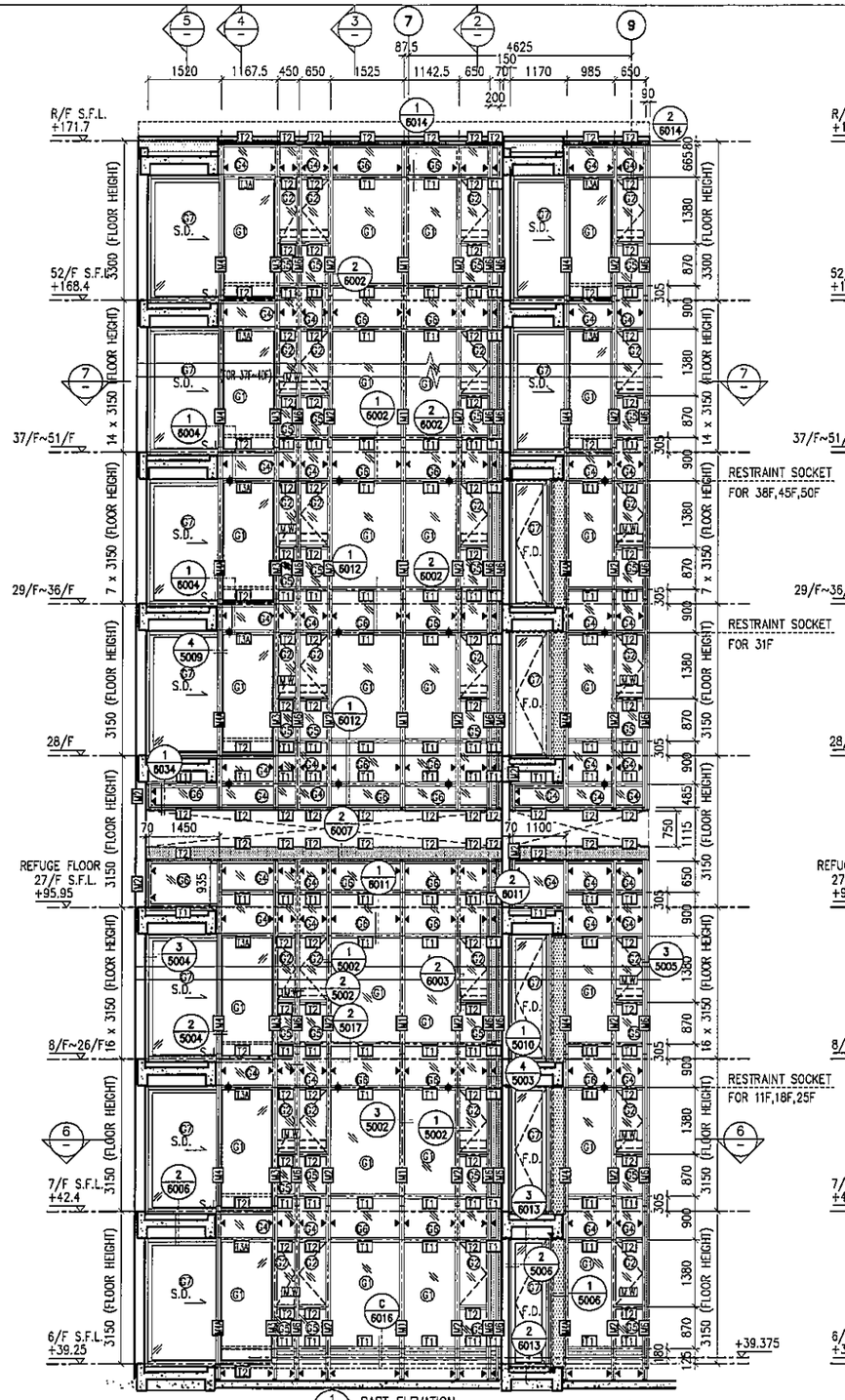

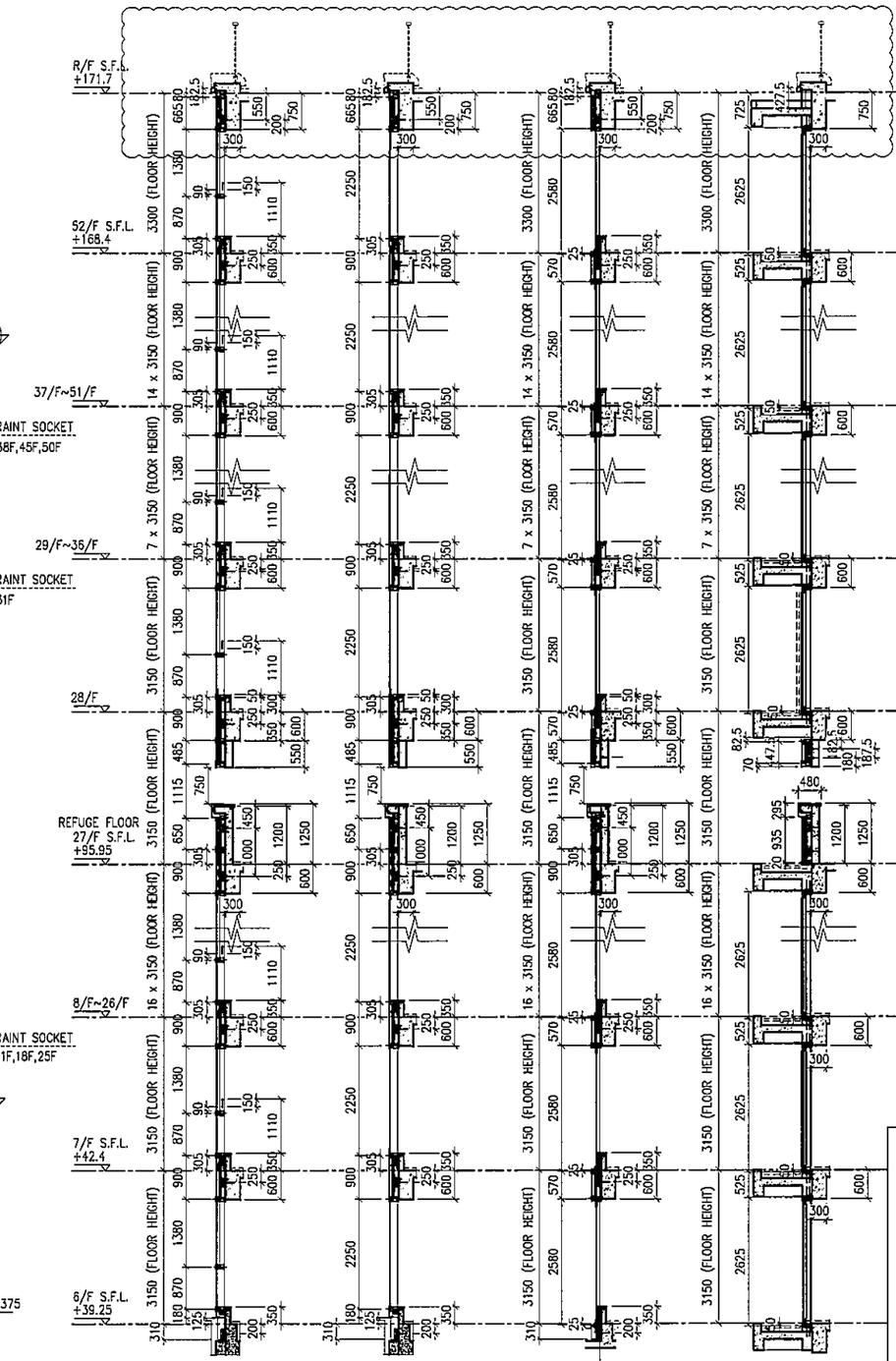

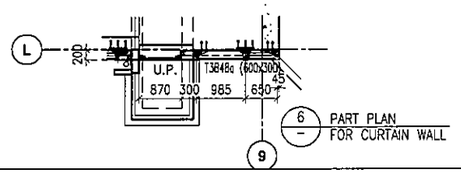

LEGEND:

- G1 – 10 mm THK. TEMPERED BLUE TINTED GLASS (OUTER) + 9 mm AIR SPACE + 8 mm THK. TEMPERED CLEAR GLASS (INNER)
- G2 – 8 mm THK. HEAT STRENGTHENED TINTED GLASS (OUTER)+ 9 mm AIR SPACE + 8 mm THK. HEAT STRENGTHENED CLEAR GLASS (INNER)
- G3 – 10 mm THK. HEAT STRENGTHENED BLUE TINTED GLASS (OUTER)+ 9 mm AIR SPACE + 8 mm THK. TEMPERED CLEAR GLASS (INNER)
- G4 – 8 mm THK. HEAT STRENGTHENED BLUE TINTED GLASS (SPANDREL GLASS)
- G5 – 8 mm THK. HEAT STRENGTHENED BLUE TINTED GLASS (OUTER)+ 9 mm AIR SPACE + 8 mm THK. TEMPERED CLEAR GLASS (INNER)
- G6 – 8 mm THK. TEMPERED BLUE TINTED GLASS (SPANDREL GLASS)
- G7 – 8 mm THK. HEAT STRENGTHENED TINTED GLASS (OUTER)+ 1.52PVB + 8 mm THK. HEAT STRENGTHENED CLEAR LAMINATED GLASS (INNER)
- 10 mm THK. TEMPERED GLASS (INTERNAL PROTECTIVE BARRIER)
- 3 mm THK. ALUM. CLADDING
- M.W. – MAINTENANCE WINDOW
- S.J. – STACK JOINT
- AE01 – ALUM. EXTRUSION DIE NO.
- ▲ – SUPPORT POINT
- ✦ – RESTRAINT SOCKET

B.D. REF :

CLIENT :
信和置業有限公司
Sino Land Company Limited

ARCHITECT : WONG TUNG & PARTNERS LIMITED ARCHITECTS & PLANNERS

MAIN CONTRACTOR :
CR Construction Company Limited

STRUCTURAL ENGINEER :
AECOM

FACADE CONSULTANT:
AECOM

NOTE :
1. ALL DIMENSIONS ARE IN mm.
2. ALL ELEVATIONS ARE VIEWED FROM OUTSIDE.
3. ALL DIMENSIONS TO BE VERIFIED ON SITE BEFORE FABRICATION.

LEGEND :
- X1 / X001 – DETAIL MARK NO. / REFER SHEET NO.
1. F.F.L. --FINISHED FLOOR LEVEL
2. S.F.L. --STRUCTURAL FLOOR LEVEL
3. (/R) --REVERSED DETAIL

NO.	DATE	REVISED	BY
F	16/07/2019	GENERAL REVISED	
E	17/01/2019	GENERAL REVISED	
D	22/12/2018	GENERAL REVISED	
C	04/12/2018	GENERAL REVISED	
B	24/11/2018	GENERAL REVISED	
A	10/9/2018	GENERAL REVISED	

JOB NO. : J-837

PROJECT :
URA KWUN TONG TOWN CENTRE REDEVELOPMENT (AREA 2 & 3) AT NKIL 6514, KWUN TONG, KWLOON

TITLE :
PART ELEVATION OF CURTAIN WALL AT TOWER 3

DATE : 04-JUL-18	SCALE : 1:60 (A1)
DRAWN BY : ASING	CHECKED BY : -

美特鋁質有限公司
MIDI ALUMINUM FABRICATOR LTD.
Units 6-8, Sunray Industrial Centre, 1/F
610 Cha Kwo Ling Road, Kowloon
Tel:23489211-4 Fax:(852)27727666

DWG NO. : J837-CW-2302 REV. : F

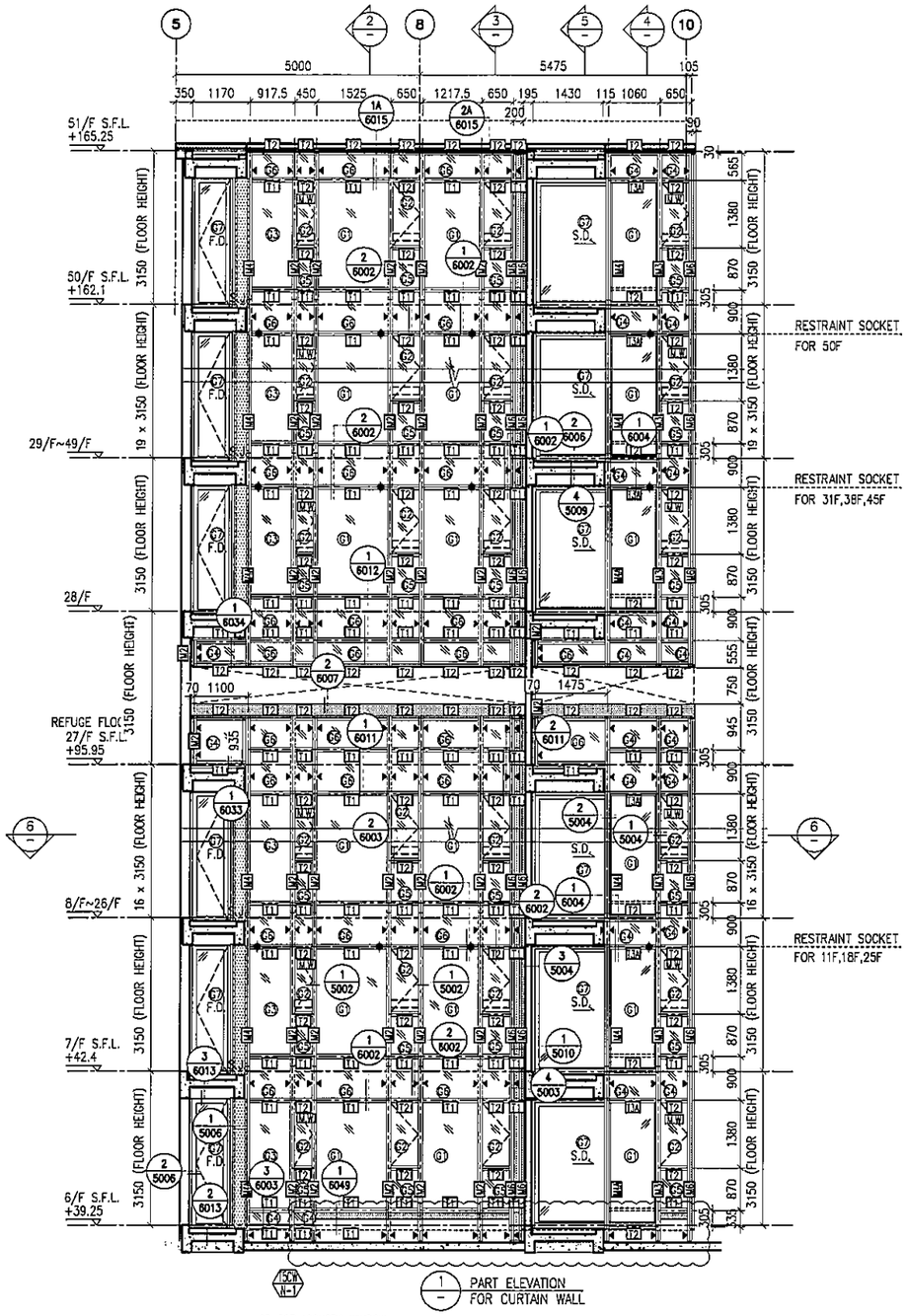

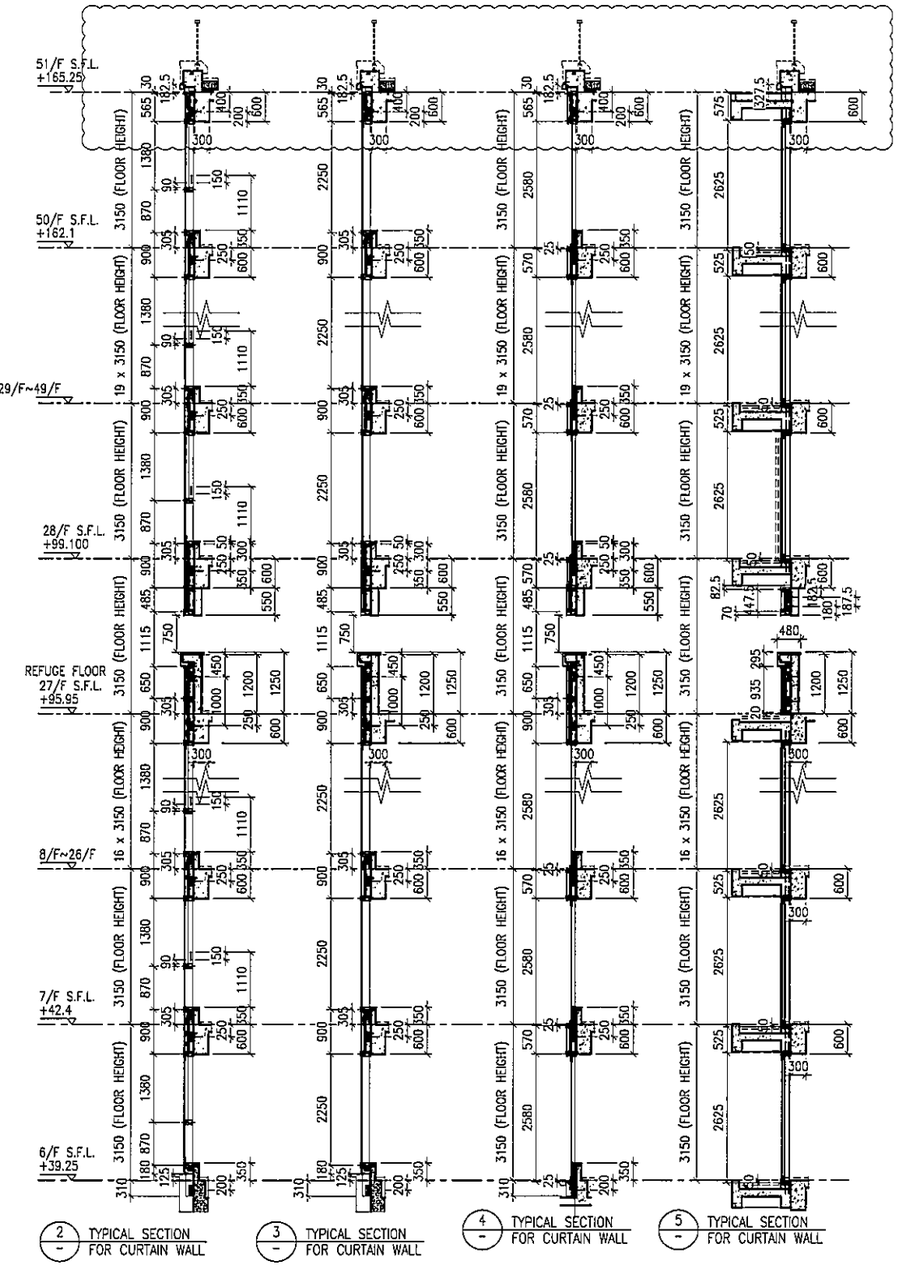

LEGEND:

- 10 mm THK. TEMPERED BLUE TINTED GLASS (OUTER) + 9 mm AIR SPACE + 8 mm THK. TEMPERED CLEAR GLASS (INNER)
- 8 mm THK. HEAT STRENGTHENED TINTED GLASS (OUTER)+ 9 mm AIR SPACE + 8 mm THK. HEAT STRENGTHENED CLEAR GLASS (INNER)
- 10 mm THK. HEAT STRENGTHENED BLUE TINTED GLASS (OUTER)+ 9 mm AIR SPACE + 8 mm THK. TEMPERED CLEAR GLASS (INNER)
- 8 mm THK. HEAT STRENGTHENED BLUE TINTED GLASS (SPANDREL GLASS)
- 8 mm THK. HEAT STRENGTHENED BLUE TINTED GLASS (OUTER)+ 9 mm AIR SPACE + 8 mm THK. TEMPERED CLEAR GLASS (INNER)
- 8 mm THK. TEMPERED BLUE TINTED GLASS (SPANDREL GLASS)
- 8 mm THK. HEAT STRENGTHENED TINTED GLASS (OUTER)+ 1.52PVB + 8 mm THK. HEAT STRENGTHENED CLEAR LAMINATED GLASS (INNER) 10 mm THK. TEMPERED GLASS (INTERNAL PROTECTIVE BARRIER)
- 3 mm THK. ALUM. CLADDING
- M.W. – MAINTENANCE WINDOW
- S.J. – STACK JOINT
- AE01 – ALUM. EXTRUSION DIE NO.
- ▲ – SUPPORT POINT
- ◆ – RESTRAINT SOCKET

B.D. REF :

CLIENT :
信和置業有限公司
Sino Land Company Limited

ARCHITECT :
WONG TUNG & PARTNERS LIMITED
ARCHITECTS & PLANNERS

MAIN CONTRACTOR :
CR Construction Company Limited

STRUCTURAL ENGINEER :
AECOM

FACADE CONSULTANT:
AECOM

NOTE :
1. ALL DIMENSIONS ARE IN mm.
2. ALL ELEVATIONS ARE VIEWED FROM OUTSIDE.
3. ALL DIMENSIONS TO BE VERIFIED ON SITE BEFORE FABRICATION.

LEGEND :
- X1 / X001 – DETAIL MARK NO. / REFER SHEET NO.
1. F.F.L. --FINISHED FLOOR LEVEL
2. S.F.L. --STRUCTURAL FLOOR LEVEL
3. /R --REVERSED DETAIL

NO.	DATE	REVISED	BY
F	16/07/2019	GENERAL REVISED	
E	17/01/2019	GENERAL REVISED	
D	22/12/2018	GENERAL REVISED	
C	04/12/2018	GENERAL REVISED	
B	24/11/2018	GENERAL REVISED	
A	10/9/2018	GENERAL REVISED	

JOB NO. : J-837

PROJECT :
URA KWUN TONG TOWN CENTRE REDEVELOPMENT (AREA 2 & 3) AT NKIL 6514, KWUN TONG, KWLOON

TITLE :
PART ELEVATION OF CURTAIN WALL AT TOWER 5

DATE : 04-JUL-18 | SCALE : 1:60 (A1)

DRAWN BY : ASING | CHECKED BY : -

美特鋁質有限公司
MIDI ALUMINIUM FABRICATOR LTD.
Units 6-8, Sunray Industrial Centre, 1/F
610 Cha Kwo Ling Road, Kowloon
Tel:23489211-4 Fax:(852)27727666

DWG NO. : J837-CW-2502 | REV. : F

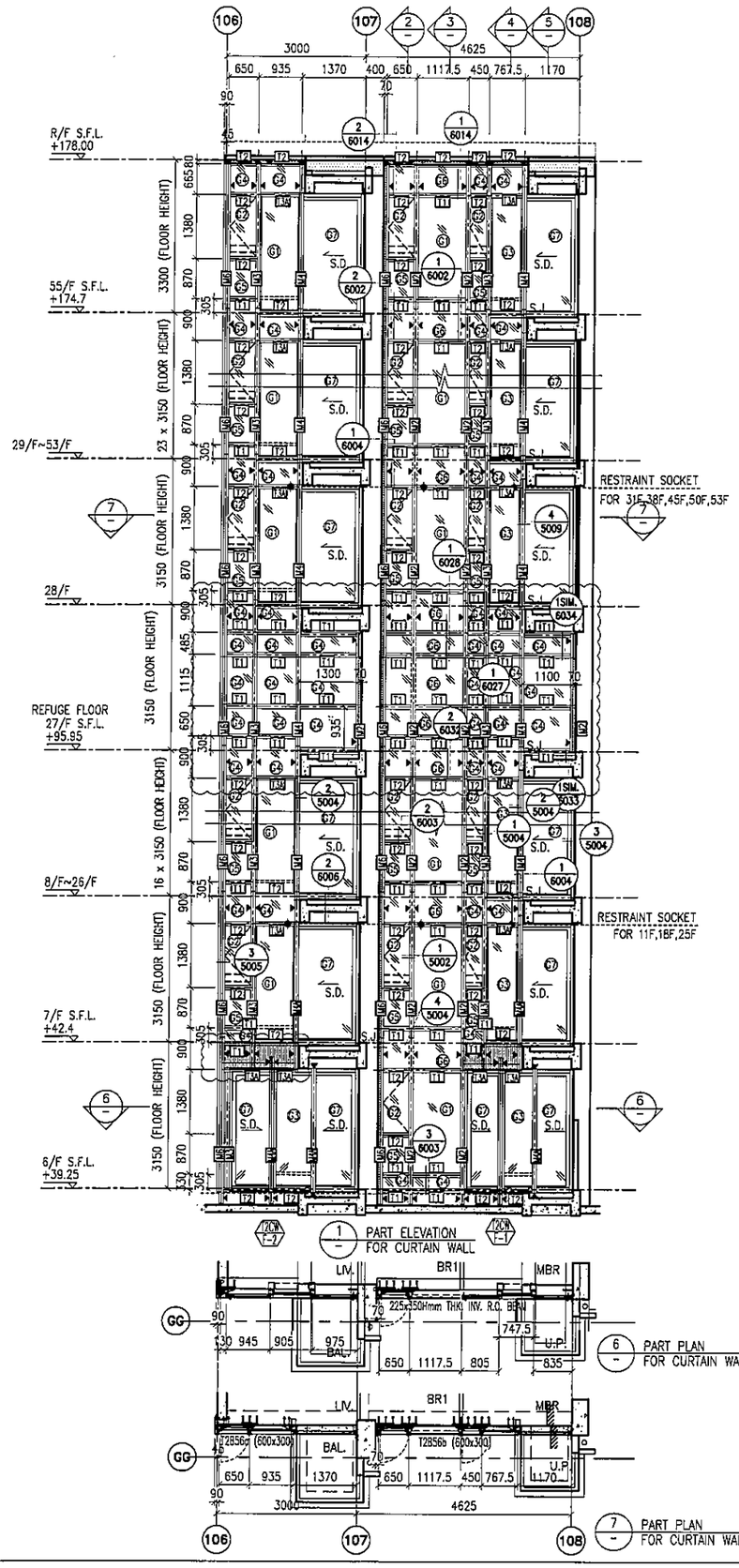

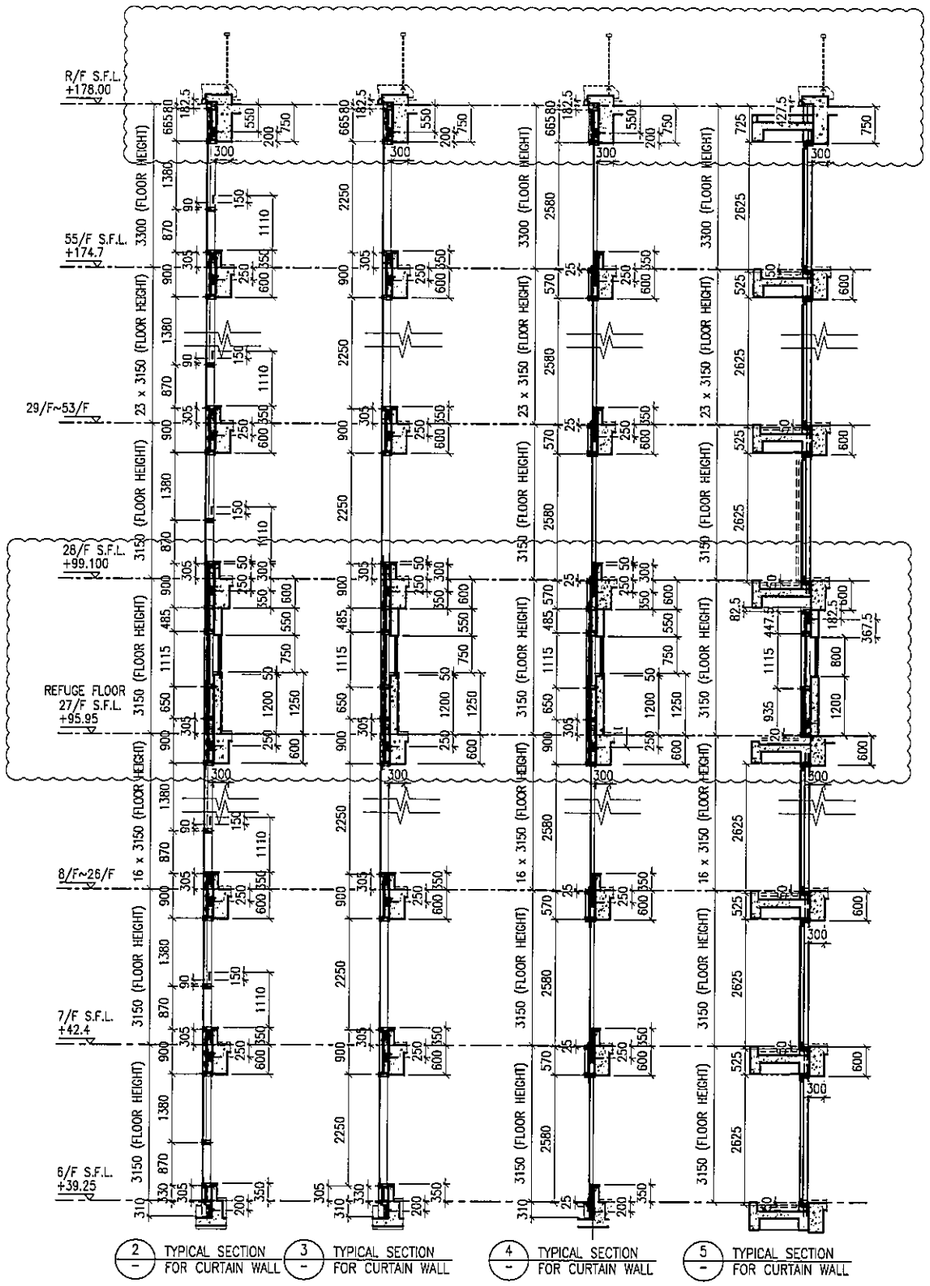

LEGEND:

- G1 – 10 mm THK. TEMPERED BLUE TINTED GLASS (OUTER) + 9 mm AIR SPACE + 8 mm THK. TEMPERED CLEAR GLASS (INNER)
- G2 – 8 mm THK. HEAT STRENGTHENED TINTED GLASS (OUTER)+ 9 mm AIR SPACE + 8 mm THK. HEAT STRENGTHENED CLEAR GLASS (INNER)
- G3 – 10 mm THK. HEAT STRENGTHENED BLUE TINTED GLASS (OUTER)+ 9 mm AIR SPACE + 8 mm THK. TEMPERED CLEAR GLASS (INNER)
- G4 – 8 mm THK. HEAT STRENGTHENED BLUE TINTED GLASS (SPANDREL GLASS)
- G5 – 8 mm THK. HEAT STRENGTHENED BLUE TINTED GLASS (OUTER)+ 9 mm AIR SPACE + 8 mm THK. TEMPERED CLEAR GLASS (INNER)
- G6 – 8 mm THK. TEMPERED BLUE TINTED GLASS (SPANDREL GLASS)
- G7 – 8 mm THK. HEAT STRENGTHENED TINTED GLASS (OUTER)+ 1.52PVB + 8 mm THK. HEAT STRENGTHENED CLEAR LAMINATED GLASS (INNER)
- 10 mm THK. TEMPERED GLASS (INTERNAL PROTECTIVE BARRIER)
- 3 mm THK. ALUM. CLADDING
- M.W. – MAINTENANCE WINDOW
- S.J. – STACK JOINT
- AE01 – ALUM. EXTRUSION DIE NO.
- ▲ – SUPPORT POINT
- ✦ – RESTRAINT SOCKET

B.D. REF :

CLIENT :
信和置業有限公司
Sino Land Company Limited

ARCHITECT :
WONG TUNG & PARTNERS LIMITED
ARCHITECTS & PLANNERS

MAIN CONTRACTOR :
CR Construction Company Limited

STRUCTURAL ENGINEER :
AECOM

FACADE CONSULTANT:
AECOM

NOTE :
1. ALL DIMENSIONS ARE IN mm.
2. ALL ELEVATIONS ARE VIEWED FROM OUTSIDE.
3. ALL DIMENSIONS TO BE VERIFIED ON SITE BEFORE FABRICATION.

LEGEND :
- X1 / X001 — DETAIL MARK NO. / REFER SHEET NO.
1. F.F.L. --FINISHED FLOOR LEVEL
2. S.F.L. --STRUCTURAL FLOOR LEVEL
3. /R --REVERSED DETAIL

NO.	DATE	REVISED	BY
G	16/07/2019	GENERAL REVISED	
F	26/05/2019	GENERAL REVISED	
E	17/01/2019	GENERAL REVISED	
D	22/12/2018	GENERAL REVISED	
C	04/12/2018	GENERAL REVISED	
B	24/11/2018	GENERAL REVISED	
A	10/9/2018	GENERAL REVISED	

JOB NO. : J-837

PROJECT :
URA KWUN TONG TOWN CENTRE REDEVELOPMENT (AREA 2 & 3) AT NKIL 6514, KWUN TONG, KWLOON

TITLE :
PART ELEVATION OF CURTAIN WALL AT TOWER 2

DATE : 04-JUL-18 | SCALE : 1:60 (A1)

DRAWN BY : ASING | CHECKED BY : -

美特鋁質有限公司
MIDI ALUMINIUM FABRICATOR LTD.
Units 6-8, Sunray Industrial Centre, 1/F
610 Cha Kwo Ling Road, Kowloon
Tel:23489211-4 Fax:(852)27727666

DWG NO. : J837-CW-2203 | REV. : G

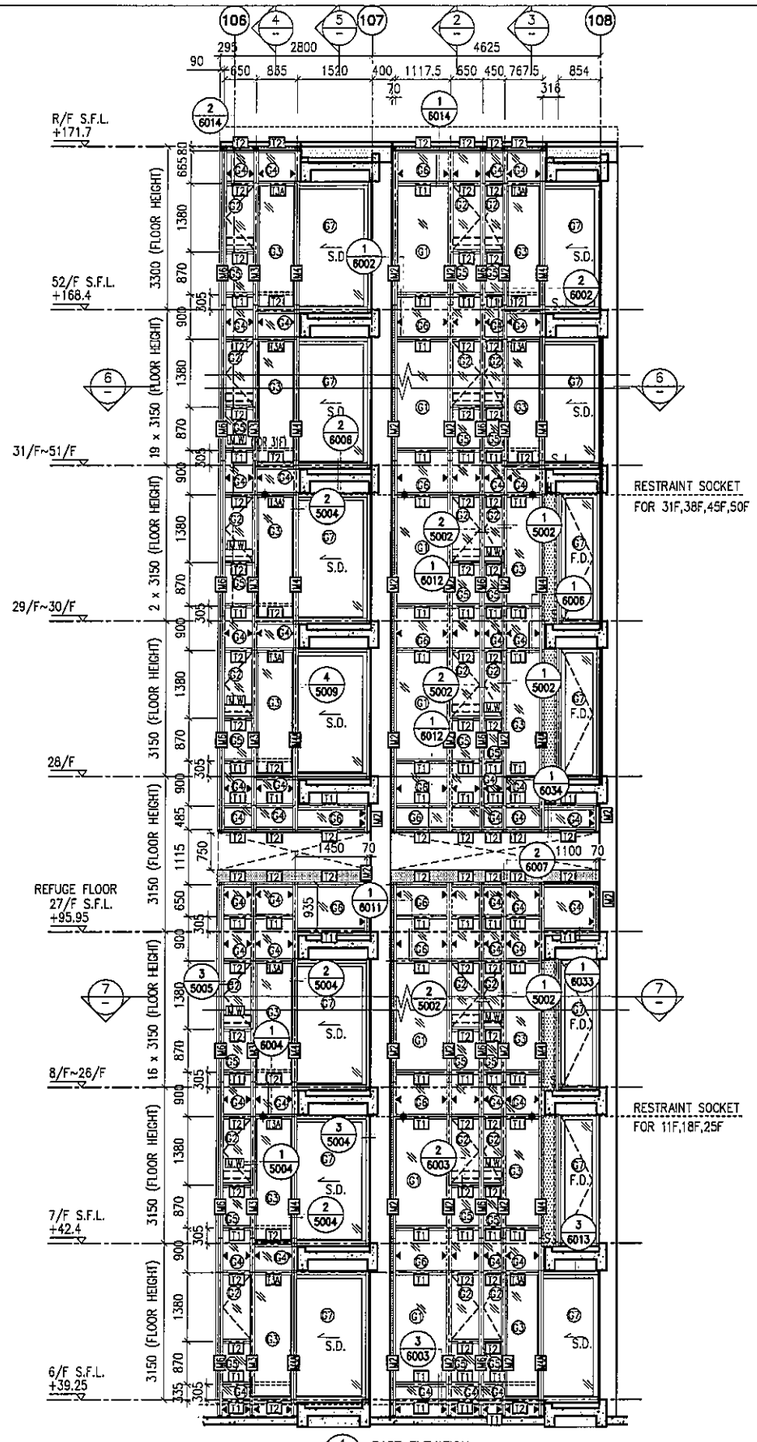

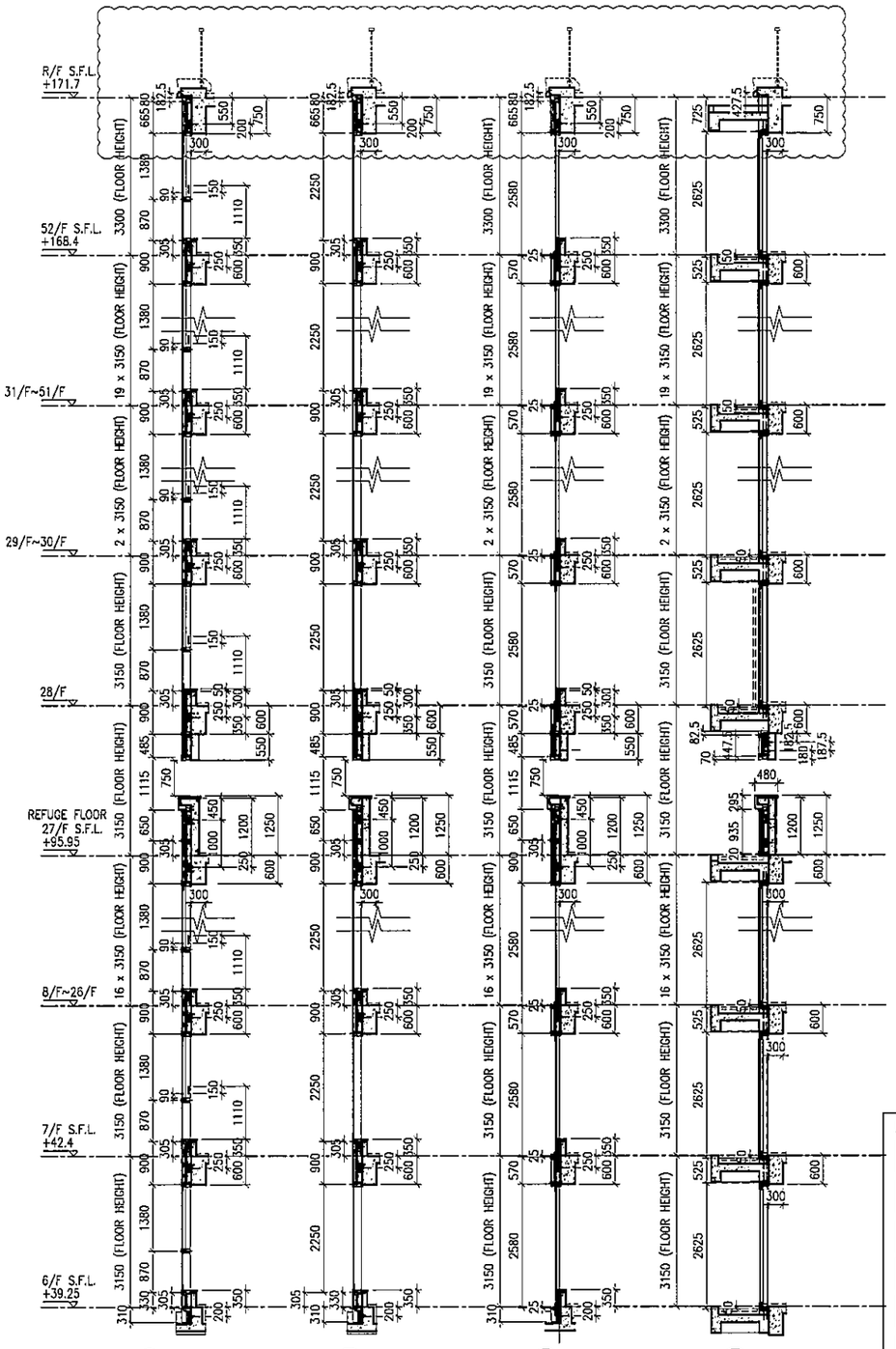

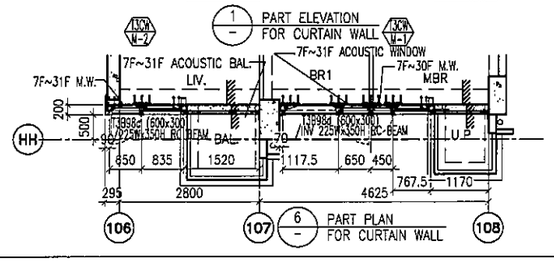

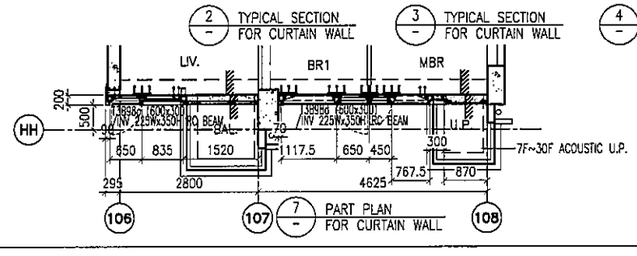

LEGEND:

- G1 – 10 mm THK. TEMPERED BLUE TINTED GLASS (OUTER) + 9 mm AIR SPACE + 8 mm THK. TEMPERED CLEAR GLASS (INNER)
- G2 – 8 mm THK. HEAT STRENGTHENED TINTED GLASS (OUTER)+ 9 mm AIR SPACE + 8 mm THK. HEAT STRENGTHENED CLEAR GLASS (INNER)
- G3 – 10 mm THK. HEAT STRENGTHENED BLUE TINTED GLASS (OUTER)+ 9 mm AIR SPACE + 8 mm THK. TEMPERED CLEAR GLASS (INNER)
- G4 – 8 mm THK. HEAT STRENGTHENED BLUE TINTED GLASS (SPANDREL GLASS)
- G5 – 8 mm THK. HEAT STRENGTHENED BLUE TINTED GLASS (OUTER)+ 9 mm AIR SPACE + 8 mm THK. TEMPERED CLEAR GLASS (INNER)
- G6 – 8 mm THK. TEMPERED BLUE TINTED GLASS (SPANDREL GLASS)
- G7 – 8 mm THK. HEAT STRENGTHENED TINTED GLASS (OUTER)+ 1.52PVB + 8 mm THK. HEAT STRENGTHENED CLEAR LAMINATED GLASS (INNER)
- 10 mm THK. TEMPERED GLASS (INTERNAL PROTECTIVE BARRIER)
- 3 mm THK. ALUM. CLADDING
- M.W. – MAINTENANCE WINDOW
- S.J. – STACK JOINT
- AE01 – ALUM. EXTRUSION DIE NO.
- ▲ – SUPPORT POINT
- ✦ – RESTRAINT SOCKET

B.D. REF :

CLIENT :
信和置業有限公司
Sino Land Company Limited

ARCHITECT :
WONG TUNG & PARTNERS LIMITED
ARCHITECTS & PLANNERS

MAIN CONTRACTOR :
CR Construction Company Limited

STRUCTURAL ENGINEER :
AECOM

FACADE CONSULTANT:
AECOM

NOTE :
1. ALL DIMENSIONS ARE IN mm.
2. ALL ELEVATIONS ARE VIEWED FROM OUTSIDE.
3. ALL DIMENSIONS TO BE VERIFIED ON SITE BEFORE FABRICATION.

LEGEND :
- X1 / X001 – DETAIL MARK NO. / REFER SHEET NO.
1. F.F.L. --FINISHED FLOOR LEVEL
2. S.F.L. --STRUCTURAL FLOOR LEVEL
3. (R) --REVERSED DETAIL

NO.	DATE	REVISED	BY
F	16/07/2019	GENERAL REVISED	
E	17/01/2019	GENERAL REVISED	
D	22/12/2018	GENERAL REVISED	
C	04/12/2018	GENERAL REVISED	
B	24/11/2018	GENERAL REVISED	
A	10/9/2018	GENERAL REVISED	

JOB NO. : J-837

PROJECT :
URA KWUN TONG TOWN CENTRE REDEVELOPMENT (AREA 2 & 3) AT NKIL 6514, KWUN TONG, KWLOON

TITLE :
PART ELEVATION OF CURTAIN WALL AT TOWER 3

DATE : 04-JUL-18 | SCALE : 1:60 (A1)

DRAWN BY : ASING | CHECKED BY : –

美特鋁質有限公司
MIDI ALUMINIUM FABRICATOR LTD.
Units 6-8, Sunray Industrial Centre, 1/F
610 Cha Kwo Ling Road, Kowloon
Tel:23489211-4 Fax:(852)27727666

DWG NO. : J837-CW-2303 | REV. : F

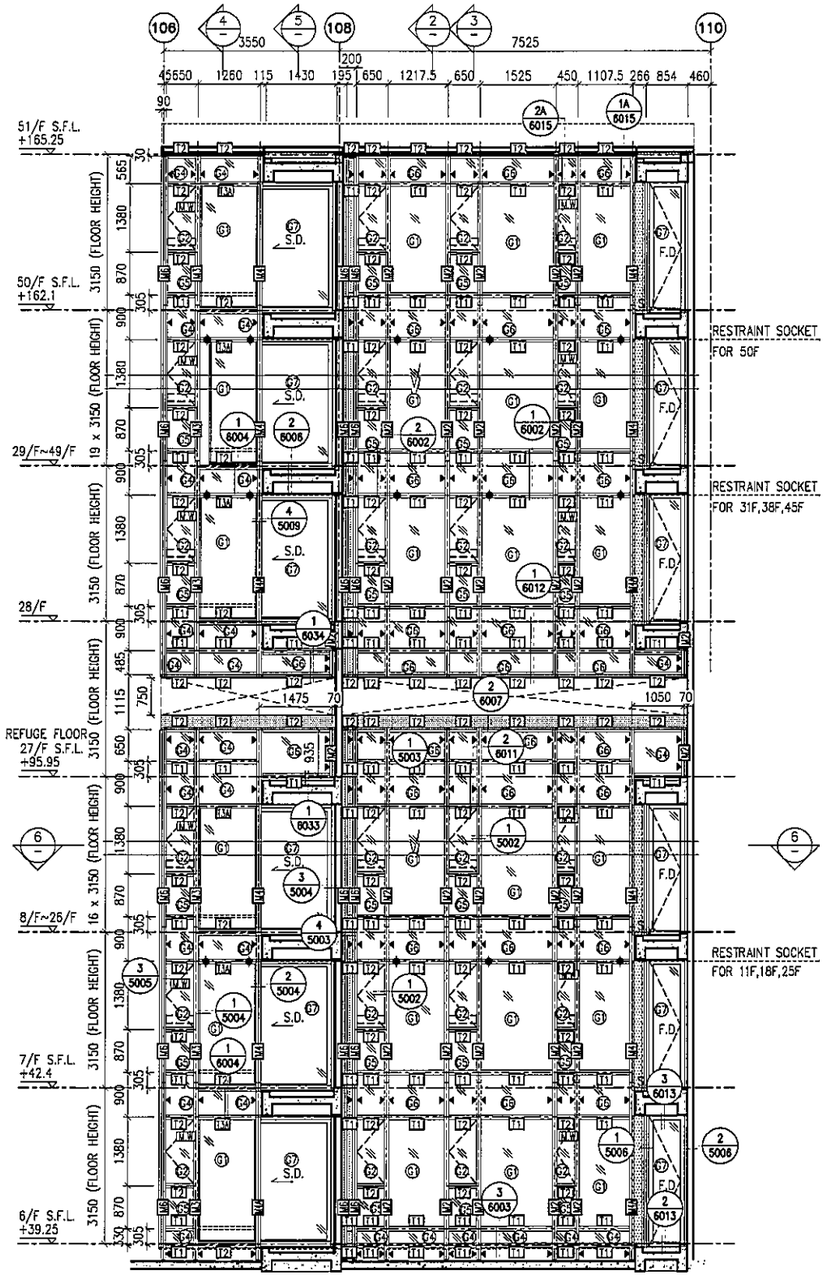

1 PART ELEVATION FOR CURTAIN WALL

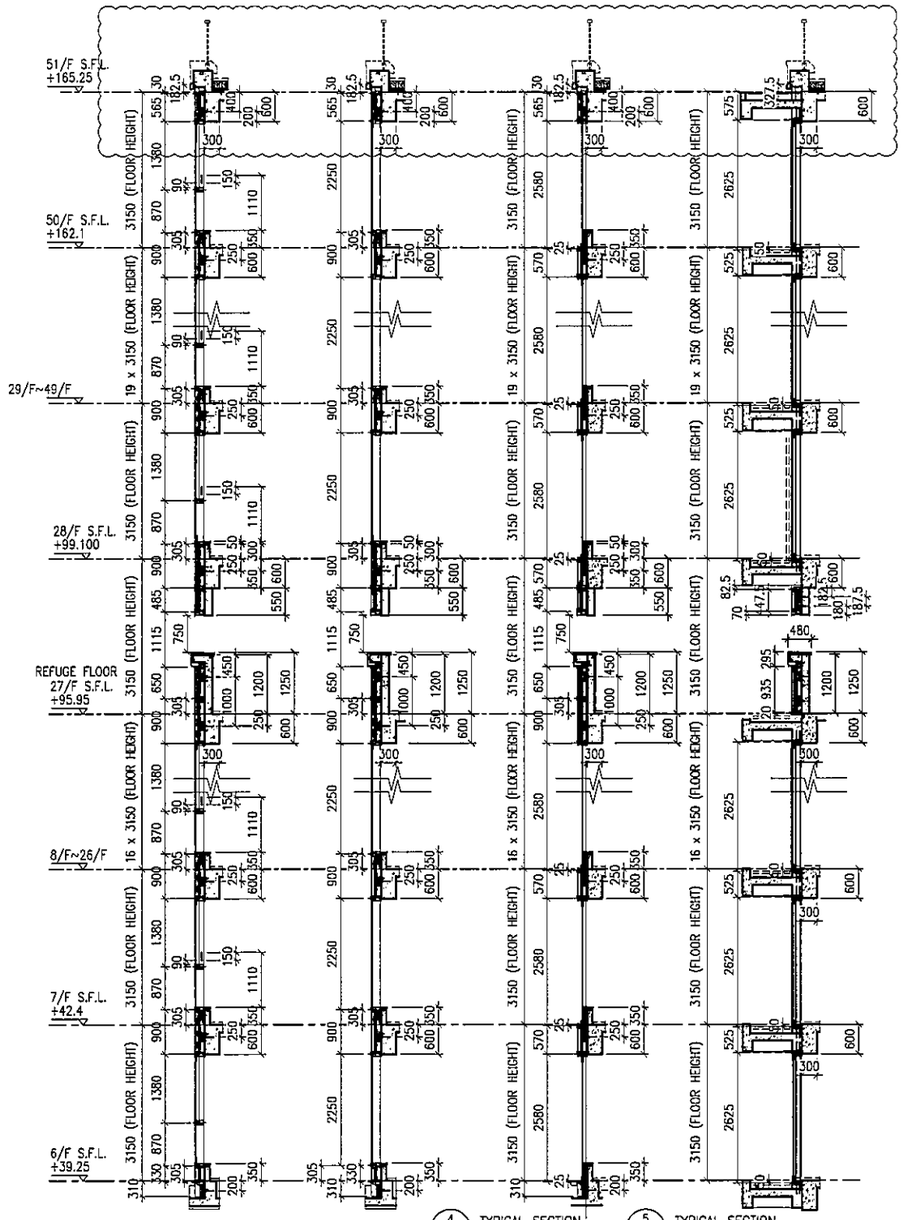

2 TYPICAL SECTION FOR CURTAIN WALL

3 TYPICAL SECTION FOR CURTAIN WALL

4 TYPICAL SECTION FOR CURTAIN WALL

5 TYPICAL SECTION FOR CURTAIN WALL

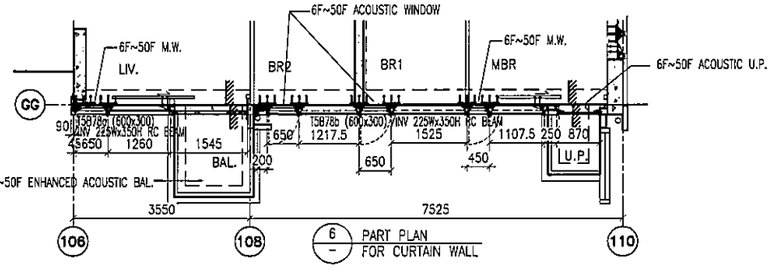

6 PART PLAN FOR CURTAIN WALL

LEGEND:

- G1+ – 10 mm THK. TEMPERED BLUE TINTED GLASS (OUTER) + 9 mm AIR SPACE + 8 mm THK. TEMPERED CLEAR GLASS (INNER)
- G2+ – 8 mm THK. HEAT STRENGTHENED TINTED GLASS (OUTER)+ 9 mm AIR SPACE + 8 mm THK. HEAT STRENGTHENED CLEAR GLASS (INNER)
- G3+ – 10 mm THK. HEAT STRENGTHENED BLUE TINTED GLASS (OUTER)+ 9 mm AIR SPACE + 8 mm THK. TEMPERED CLEAR GLASS (INNER)
- G4+ – 8 mm THK. HEAT STRENGTHENED BLUE TINTED GLASS (SPANDREL GLASS)
- G5+ – 8 mm THK. HEAT STRENGTHENED BLUE TINTED GLASS (OUTER)+ 9 mm AIR SPACE + 8 mm THK. TEMPERED CLEAR GLASS (INNER)
- G6+ – 8 mm THK. TEMPERED BLUE TINTED GLASS (SPANDREL GLASS)
- G7+ – 8 mm THK. HEAT STRENGTHENED TINTED GLASS (OUTER)+ 1.52PVB + 8 mm THK. HEAT STRENGTHENED CLEAR LAMINATED GLASS (INNER) 10 mm THK. TEMPERED GLASS (INTERNAL PROTECTIVE BARRIER)
- 3 mm THK. ALUM. CLADDING
- M.W. – MAINTENANCE WINDOW
- S.J. – STACK JOINT
- AE01 – ALUM. EXTRUSION DIE NO.
- ▲ – SUPPORT POINT
- ✦ – RESTRAINT SOCKET

B.D. REF :

CLIENT :
信和置業有限公司
Sino Land Company Limited

ARCHITECT : WONG TUNG & PARTNERS LIMITED ARCHITECTS & PLANNERS

MAIN CONTRACTOR :
CR Construction Company Limited

STRUCTURAL ENGINEER :
AECOM

FACADE CONSULTANT:
AECOM

NOTE :
1. ALL DIMENSIONS ARE IN mm.
2. ALL ELEVATIONS ARE VIEWED FROM OUTSIDE.
3. ALL DIMENSIONS TO BE VERIFIED ON SITE BEFORE FABRICATION.

LEGEND :
- X1 / X001 – DETAIL MARK NO. / REFER SHEET NO.
1. F.F.L. --FINISHED FLOOR LEVEL
2. S.F.L. --STRUCTURAL FLOOR LEVEL
3. /R --REVERSED DETAIL

NO.	DATE	REVISED	BY
F	16/07/2019	GENERAL REVISED	
E	17/01/2019	GENERAL REVISED	
D	22/12/2018	GENERAL REVISED	
C	04/12/2018	GENERAL REVISED	
B	24/11/2018	GENERAL REVISED	
A	10/9/2018	GENERAL REVISED	

JOB NO. : J-837

PROJECT :
URA KWUN TONG TOWN CENTRE REDEVELOPMENT (AREA 2 & 3) AT NKIL 6514, KWUN TONG, KWLOON

TITLE :
PART ELEVATION OF CURTAIN WALL AT TOWER 5

DATE : 04-JUL-18 | SCALE : 1:60 (A1)

DRAWN BY : ASING | CHECKED BY : –

美特鋁質有限公司
MIDI ALUMINIUM FABRICATOR LTD.
Units 6-8, Sunray Industrial Centre, 1/F
610 Cha Kwo Ling Road, Kowloon
Tel:23489211-4 Fax:(852)27727666

DWG NO. : J837-CW-2503 | REV. : F

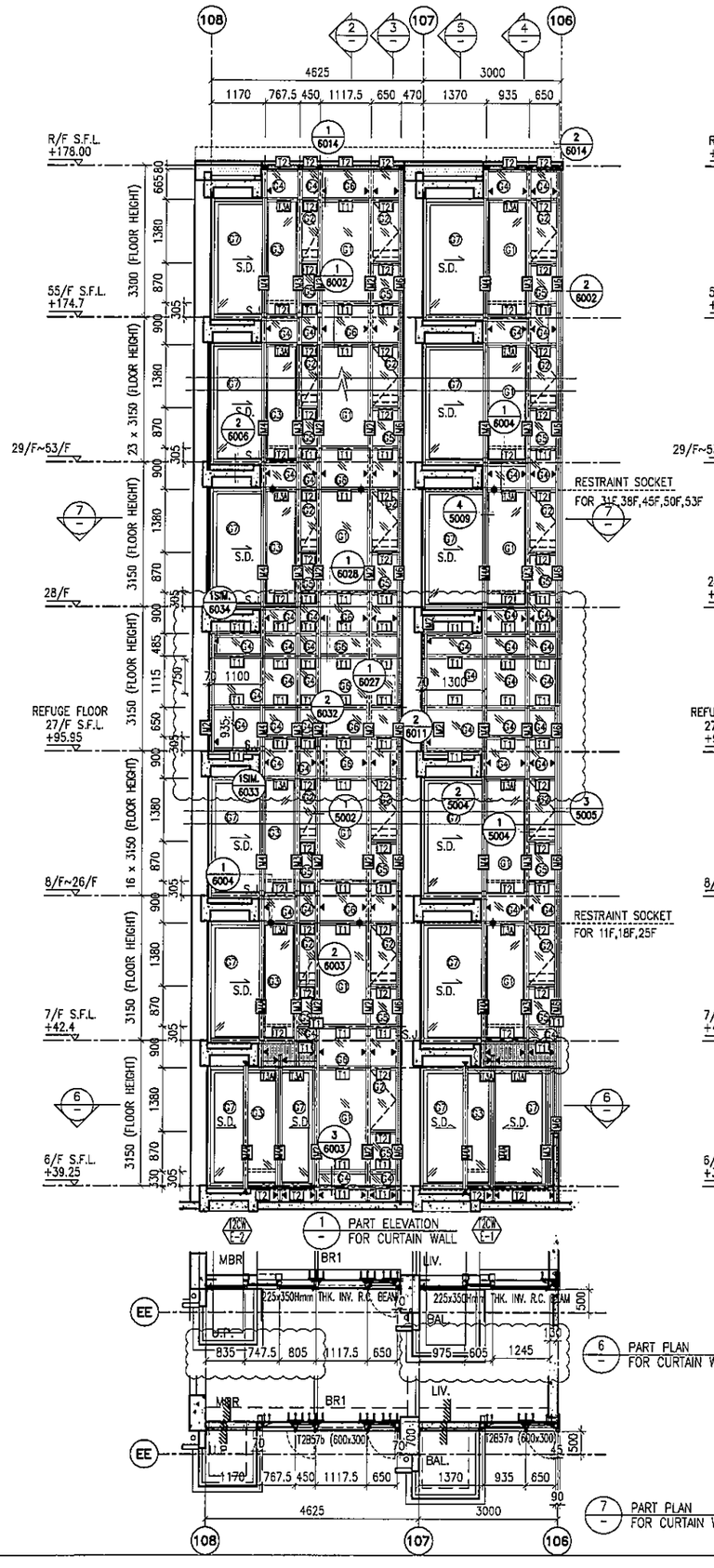

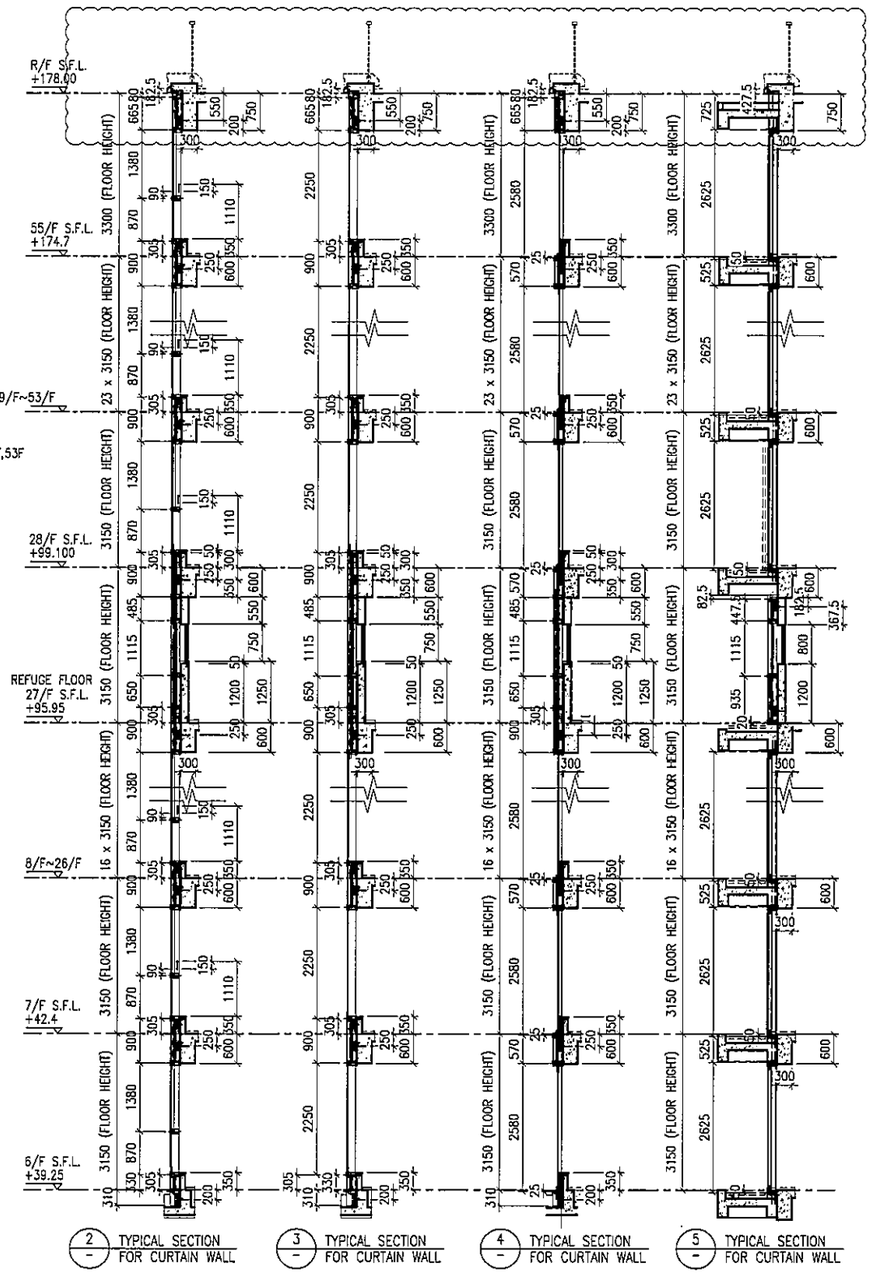

LEGEND:

- 10 mm THK. TEMPERED BLUE TINTED GLASS (OUTER) + 9 mm AIR SPACE + 8 mm THK. TEMPERED CLEAR GLASS (INNER)
- 8 mm THK. HEAT STRENGTHENED TINTED GLASS (OUTER)+ 9 mm AIR SPACE + 8 mm THK. HEAT STRENGTHENED CLEAR GLASS (INNER)
- 10 mm THK. HEAT STRENGTHENED BLUE TINTED GLASS (OUTER)+ 9 mm AIR SPACE + 8 mm THK. TEMPERED CLEAR GLASS (INNER)
- 8 mm THK. HEAT STRENGTHENED BLUE TINTED GLASS (SPANDREL GLASS)
- 8 mm THK. HEAT STRENGTHENED BLUE TINTED GLASS (OUTER)+ 9 mm AIR SPACE + 8 mm THK. TEMPERED CLEAR GLASS (INNER)
- 8 mm THK. TEMPERED BLUE TINTED GLASS (SPANDREL GLASS)
- 8 mm THK. HEAT STRENGTHENED TINTED GLASS (OUTER)+ 1.52PVB + 8 mm THK. HEAT STRENGTHENED CLEAR LAMINATED GLASS (INNER) 10 mm THK. TEMPERED GLASS (INTERNAL PROTECTIVE BARRIER)
- 3 mm THK. ALUM. CLADDING
- M.W. – MAINTENANCE WINDOW
- S.J. – STACK JOINT
- AE01 – ALUM. EXTRUSION DIE NO.
- ▲ – SUPPORT POINT
- ✦ – RESTRAINT SOCKET

B.D. REF :

CLIENT :
信和置業有限公司
Sino Land Company Limited

ARCHITECT : WONG TUNG & PARTNERS LIMITED
ARCHITECTS & PLANNERS

MAIN CONTRACTOR :
CR Construction Company Limited

STRUCTURAL ENGINEER :
AECOM

FACADE CONSULTANT:
AECOM

NOTE :
1. ALL DIMENSIONS ARE IN mm.
2. ALL ELEVATIONS ARE VIEWED FROM OUTSIDE.
3. ALL DIMENSIONS TO BE VERIFIED ON SITE BEFORE FABRICATION.

LEGEND :
X1 – DETAIL MARK NO.
X001 – REFER SHEET NO.

1. F.F.L. --FINISHED FLOOR LEVEL
2. S.F.L. --STRUCTURAL FLOOR LEVEL
3. (VR) --REVERSED DETAIL

NO.	DATE	REVISED	BY
G	16/07/2019	GENERAL REVISED	
F	26/05/2019	GENERAL REVISED	
E	17/01/2019	GENERAL REVISED	
D	22/12/2018	GENERAL REVISED	
C	04/12/2018	GENERAL REVISED	
B	24/11/2018	GENERAL REVISED	
A	10/9/2018	GENERAL REVISED	

JOB NO. : J-837

PROJECT :
URA KWUN TONG TOWN CENTRE REDEVELOPMENT (AREA 2 & 3) AT NKIL 6514, KWUN TONG, KWLOON

TITLE :
PART ELEVATION OF CURTAIN WALL AT TOWER 2

DATE : 04-JUL-18 | SCALE : 1:60 (A1)

DRAWN BY : ASING | CHECKED BY : –

美特鋁質有限公司
MIDI ALUMINIUM FABRICATOR LTD.
Units 6-8, Sunray Industrial Centre, 1/F
610 Cha Kwo Ling Road, Kowloon
Tel:23489211-4 Fax:(852)27727666

DWG NO. : J837-CW-2204 | REV. : G

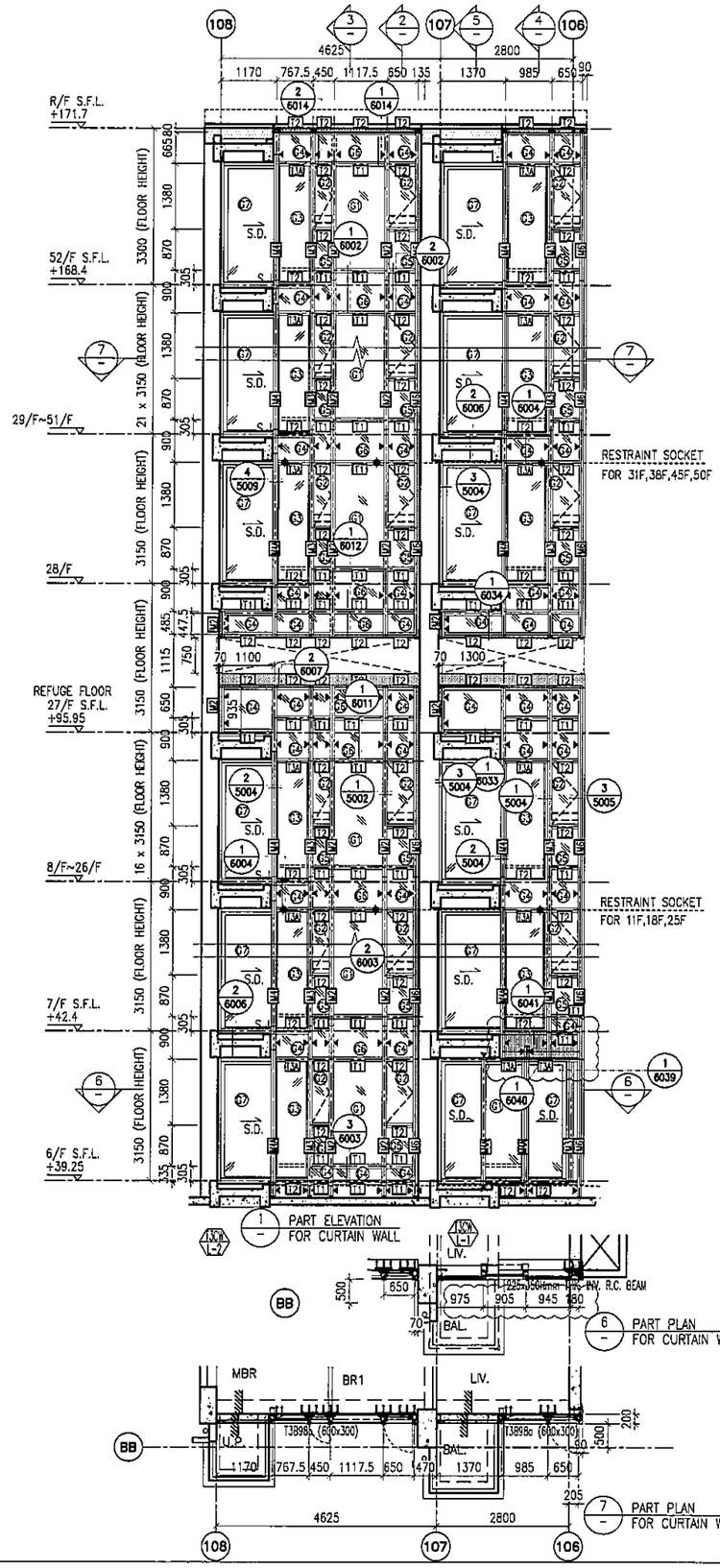

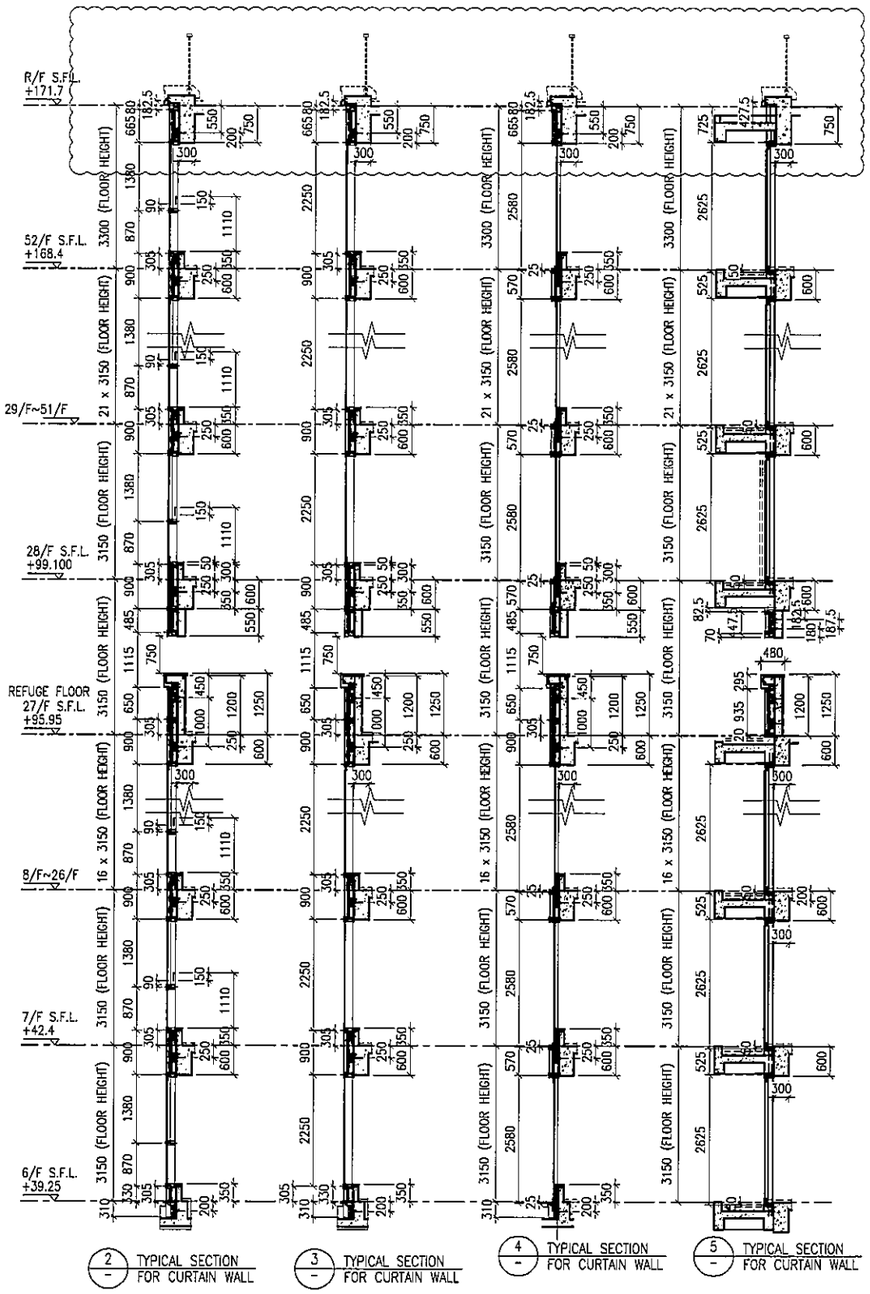

LEGEND:

- 10 mm THK. TEMPERED BLUE TINTED GLASS (OUTER) + 9 mm AIR SPACE + 8 mm THK. TEMPERED CLEAR GLASS (INNER)
- 8 mm THK. HEAT STRENGTHENED TINTED GLASS (OUTER)+ 9 mm AIR SPACE + 8 mm THK. HEAT STRENGTHENED CLEAR GLASS (INNER)
- 10 mm THK. HEAT STRENGTHENED BLUE TINTED GLASS (OUTER)+ 9 mm AIR SPACE + 8 mm THK. TEMPERED CLEAR GLASS (INNER)
- 8 mm THK. HEAT STRENGTHENED BLUE TINTED GLASS (SPANDREL GLASS)
- 8 mm THK. HEAT STRENGTHENED BLUE TINTED GLASS (OUTER)+ 9 mm AIR SPACE + 8 mm THK. TEMPERED CLEAR GLASS (INNER)
- 8 mm THK. TEMPERED BLUE TINTED GLASS (SPANDREL GLASS)
- 8 mm THK. HEAT STRENGTHENED TINTED GLASS (OUTER)+ 1.52PVB + 8 mm THK. HEAT STRENGTHENED CLEAR LAMINATED GLASS (INNER)
- 10 mm THK. TEMPERED GLASS (INTERNAL PROTECTIVE BARRIER)
- 3 mm THK. ALUM. CLADDING
- M.W. – MAINTENANCE WINDOW
- S.J. – STACK JOINT
- AE01 – ALUM. EXTRUSION DIE NO.
- ▲ – SUPPORT POINT
- ✦ – RESTRAINT SOCKET

B.D. REF :

CLIENT :
信和置業有限公司
Sino Land Company Limited

ARCHITECT :
WONG TUNG & PARTNERS LIMITED
ARCHITECTS & PLANNERS

MAIN CONTRACTOR :
CR Construction Company Limited

STRUCTURAL ENGINEER :
AECOM

FACADE CONSULTANT:
AECOM

NOTE :
1. ALL DIMENSIONS ARE IN mm.
2. ALL ELEVATIONS ARE VIEWED FROM OUTSIDE.
3. ALL DIMENSIONS TO BE VERIFIED ON SITE BEFORE FABRICATION.

LEGEND :
X1 — DETAIL MARK NO.
X001 — REFER SHEET NO.
1. F.F.L. --FINISHED FLOOR LEVEL
2. S.F.L. --STRUCTURAL FLOOR LEVEL
3. (R) --REVERSED DETAIL

NO.	DATE	REVISED	BY
G	16/07/2019	GENERAL REVISED	
F	26/05/2019	GENERAL REVISED	
E	17/01/2019	GENERAL REVISED	
D	22/12/2018	GENERAL REVISED	
C	04/12/2018	GENERAL REVISED	
B	24/11/2018	GENERAL REVISED	
A	10/9/2018	GENERAL REVISED	

JOB NO. : J-837

PROJECT :
URA KWUN TONG TOWN CENTRE REDEVELOPMENT (AREA 2 & 3) AT NKIL 6514, KWUN TONG, KWLOON

TITLE :
PART ELEVATION OF CURTAIN WALL AT TOWER 3

DATE : 04-JUL-18 | SCALE : 1:60 (A1)

DRAWN BY : ASING | CHECKED BY : –

美特鋁質有限公司
MIDI ALUMINIUM FABRICATOR LTD.
Units 6-8, Sunray Industrial Centre, 1/F
610 Cha Kwo Ling Road, Kowloon
Tel:23489211-4 Fax:(852)27727666

DWG NO. : J837-CW-2304 | REV. : G

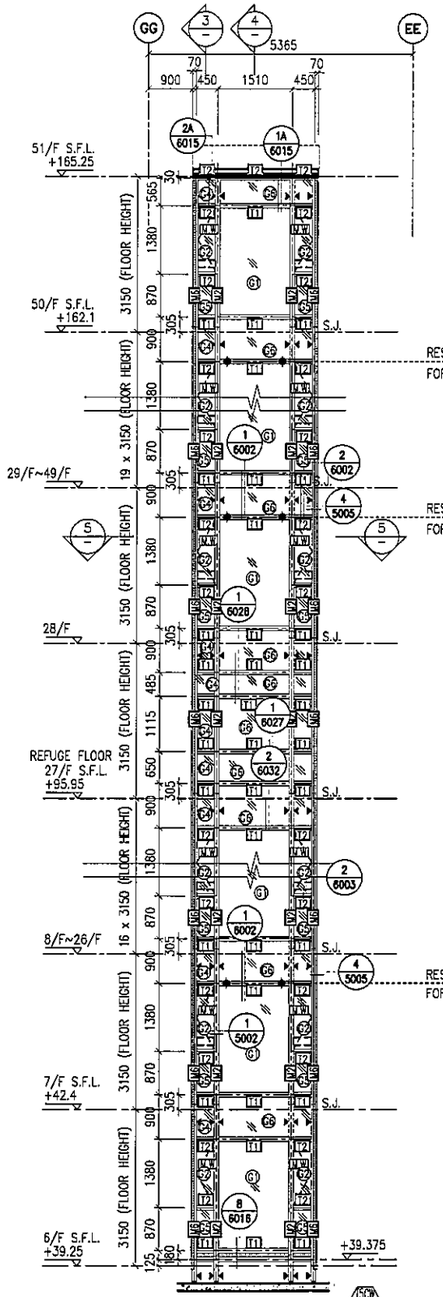

1 PART ELEVATION FOR CURTAIN WALL

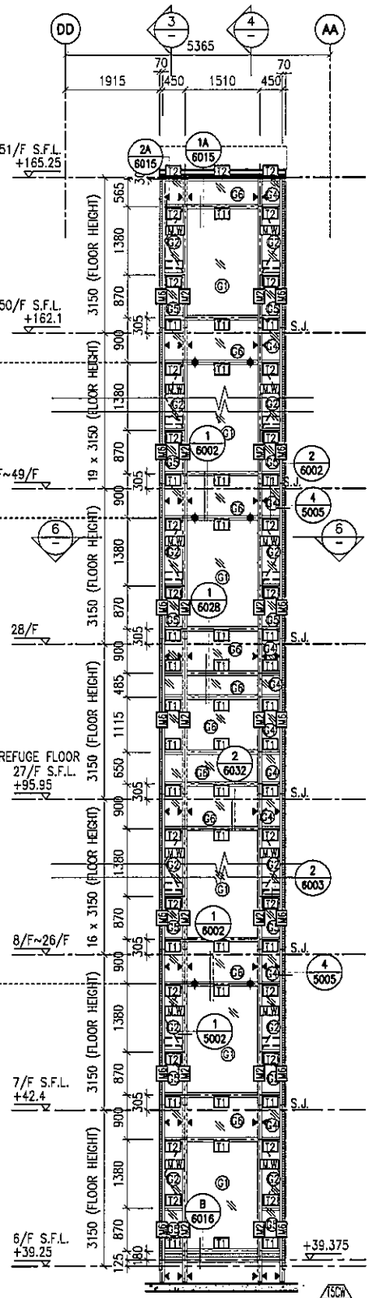

2 PART ELEVATION FOR CURTAIN WALL

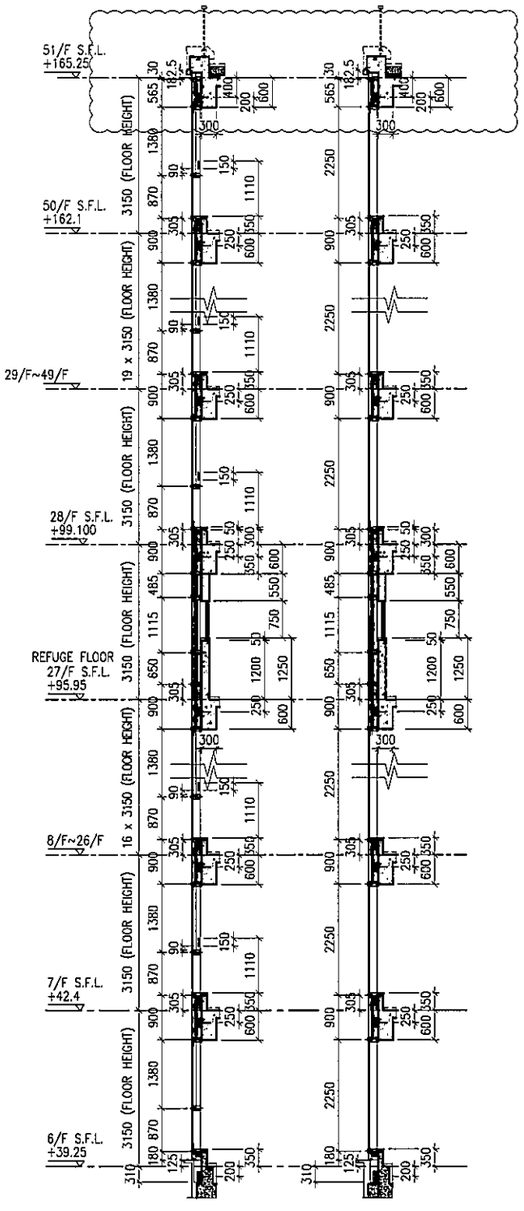

3 TYPICAL SECTION FOR CURTAIN WALL

4 TYPICAL SECTION FOR CURTAIN WALL

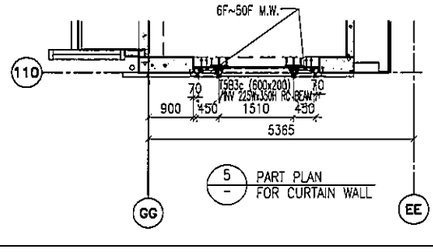

5 PART PLAN FOR CURTAIN WALL

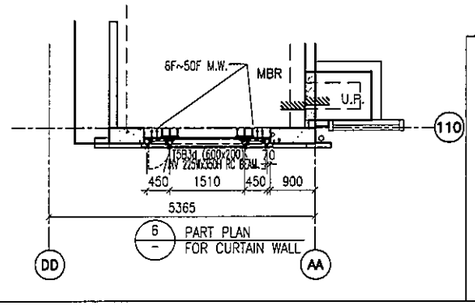

6 PART PLAN FOR CURTAIN WALL

LEGEND:

- 10 mm THK. TEMPERED BLUE TINTED GLASS (OUTER) + 9 mm AIR SPACE + 8 mm THK. TEMPERED CLEAR GLASS (INNER)
- 8 mm THK. HEAT STRENGTHENED TINTED GLASS (OUTER)+ 9 mm AIR SPACE + 8 mm THK. HEAT STRENGTHENED CLEAR GLASS (INNER)
- 10 mm THK. HEAT STRENGTHENED BLUE TINTED GLASS (OUTER)+ 9 mm AIR SPACE + 8 mm THK. TEMPERED CLEAR GLASS (INNER)
- 8 mm THK. HEAT STRENGTHENED BLUE TINTED GLASS (SPANDREL GLASS)
- 8 mm THK. HEAT STRENGTHENED BLUE TINTED GLASS (OUTER)+ 9 mm AIR SPACE + 8 mm THK. TEMPERED CLEAR GLASS (INNER)
- 8 mm THK. TEMPERED BLUE TINTED GLASS (SPANDREL GLASS)
- 8 mm THK. HEAT STRENGTHENED TINTED GLASS (OUTER)+ 1.52PVB + 8 mm THK. HEAT STRENGTHENED CLEAR LAMINATED GLASS (INNER)
- 10 mm THK. TEMPERED GLASS (INTERNAL PROTECTIVE BARRIER)
- 3 mm THK. ALUM. CLADDING
- M.W. – MAINTENANCE WINDOW
- S.J. – STACK JOINT
- AE01 – ALUM. EXTRUSION DIE NO.
- ▲ – SUPPORT POINT
- ◆ – RESTRAINT SOCKET

B.D. REF :

CLIENT :
信和置業有限公司
Sino Land Company Limited

ARCHITECT :
WONG TUNG & PARTNERS LIMITED
ARCHITECTS & PLANNERS

MAIN CONTRACTOR :
CR Construction Company Limited

STRUCTURAL ENGINEER :
AECOM

FACADE CONSULTANT:
AECOM

NOTE :
1. ALL DIMENSIONS ARE IN mm.
2. ALL ELEVATIONS ARE VIEWED FROM OUTSIDE.
3. ALL DIMENSIONS TO BE VERIFIED ON SITE BEFORE FABRICATION.

LEGEND :
- X1 / XC01 – DETAIL MARK NO. / REFER SHEET NO.
1. F.F.L. --FINISHED FLOOR LEVEL
2. S.F.L. --STRUCTURAL FLOOR LEVEL
3. /R --REVERSED DETAIL

NO.	DATE	REVISED	BY
F	16/07/2019	GENERAL REVISED	
E	17/01/2019	GENERAL REVISED	
D	22/12/2018	GENERAL REVISED	
C	04/12/2018	GENERAL REVISED	
B	24/11/2018	GENERAL REVISED	
A	10/9/2018	GENERAL REVISED	

JOB NO. : J-837

PROJECT :
URA KWUN TONG TOWN CENTRE
REDEVELOPMENT (AREA 2 & 3) AT
NKIL 6514, KWUN TONG, KWLOON

TITLE :
PART ELEVATION
OF CURTAIN WALL
AT TOWER 5

DATE : 04-JUL-18 | SCALE : 1:60 (A1)

DRAWN BY : ASING | CHECKED BY : --

美特鋁製有限公司
MIDI ALUMINIUM FABRICATOR LTD.
Units 6-8, Sunray Industrial Centre, 1/F
610 Cha Kwo Ling Road, Kowloon
Tel:23489211-4 Fax:(852)27727666

DWG NO. : J837-CW-2504 | REV. : F

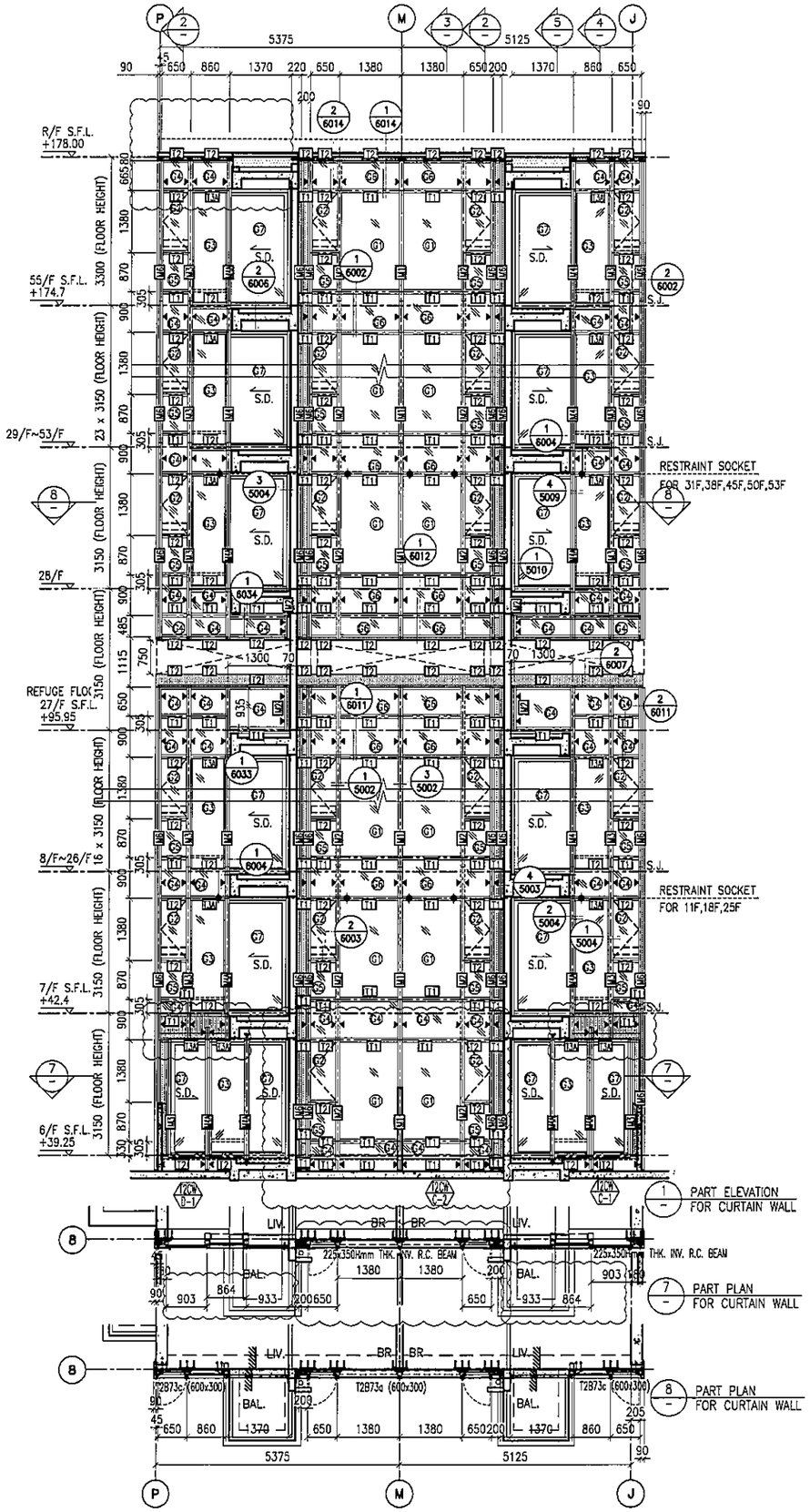

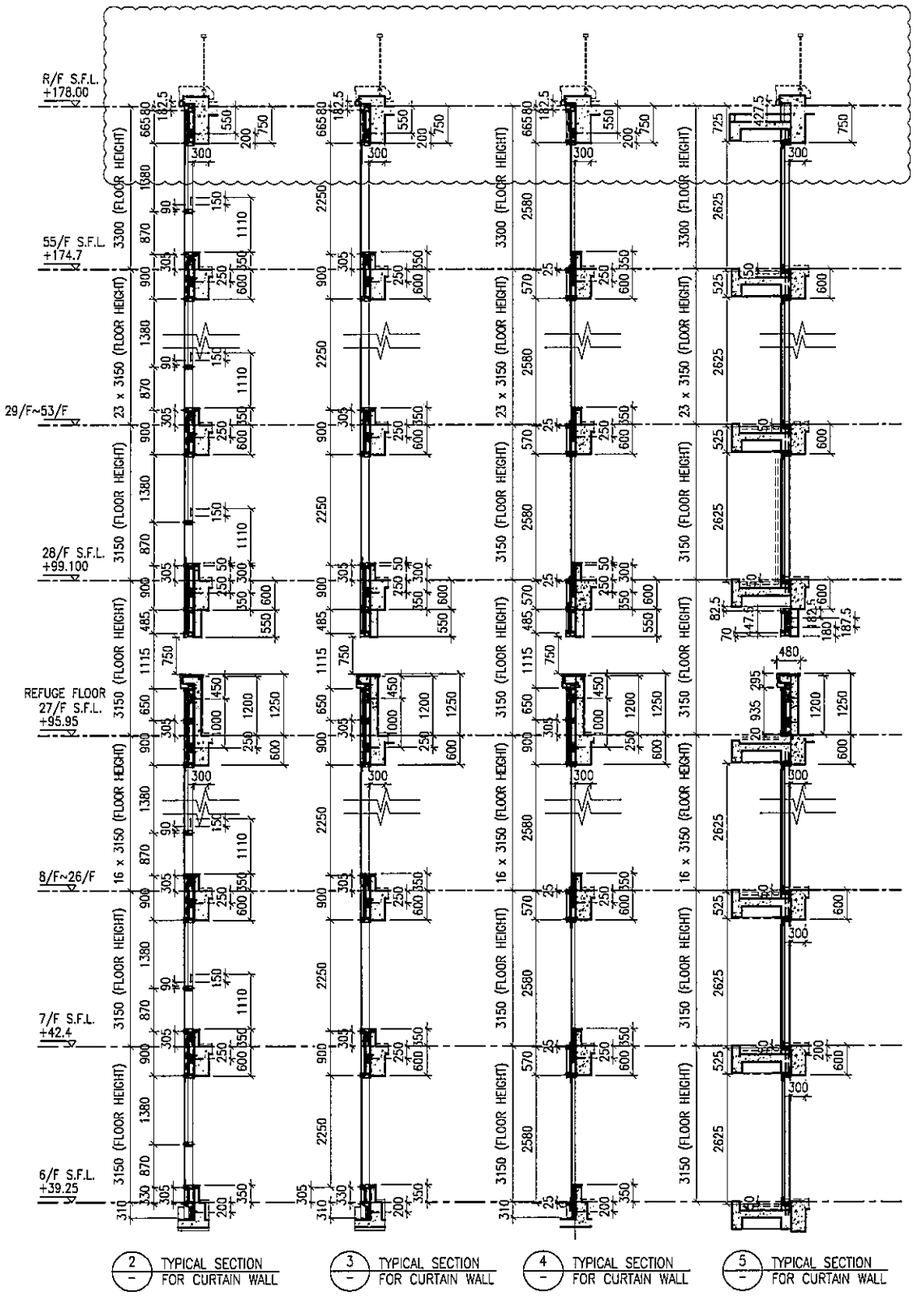

LEGEND:

- 10 mm THK. TEMPERED BLUE TINTED GLASS (OUTER) + 9 mm AIR SPACE + 8 mm THK. TEMPERED CLEAR GLASS (INNER)
- 8 mm THK. HEAT STRENGTHENED TINTED GLASS (OUTER)+ 9 mm AIR SPACE + 8 mm THK. HEAT STRENGTHENED CLEAR GLASS (INNER)
- 10 mm THK. HEAT STRENGTHENED BLUE TINTED GLASS (OUTER)+ 9 mm AIR SPACE + 8 mm THK. TEMPERED CLEAR GLASS (INNER)
- 8 mm THK. HEAT STRENGTHENED BLUE TINTED GLASS (SPANDREL GLASS)
- 8 mm THK. HEAT STRENGTHENED BLUE TINTED GLASS (OUTER)+ 9 mm AIR SPACE + 8 mm THK. TEMPERED CLEAR GLASS (INNER)
- 8 mm THK. TEMPERED BLUE TINTED GLASS (SPANDREL GLASS)
- 8 mm THK. HEAT STRENGTHENED TINTED GLASS (OUTER)+ 1.52PVB + 8 mm THK. HEAT STRENGTHENED CLEAR LAMINATED GLASS (INNER) 10 mm THK. TEMPERED GLASS (INTERNAL PROTECTIVE BARRIER)
- 3 mm THK. ALUM. CLADDING
- M.W. – MAINTENANCE WINDOW
- S.J. – STACK JOINT
- AE01 – ALUM. EXTRUSION DIE NO.
- ▲ – SUPPORT POINT
- ◆ – RESTRAINT SOCKET

B.D. REF :

CLIENT :
信和置業有限公司
Sino Land Company Limited

ARCHITECT : WONG TUNG & PARTNERS LIMITED ARCHITECTS & PLANNERS

MAIN CONTRACTOR :
CR Construction Company Limited

STRUCTURAL ENGINEER :
AECOM

FACADE CONSULTANT:
AECOM

NOTE :
1. ALL DIMENSIONS ARE IN mm.
2. ALL ELEVATIONS ARE VIEWED FROM OUTSIDE.
3. ALL DIMENSIONS TO BE VERIFIED ON SITE BEFORE FABRICATION.

LEGEND :
X1 — DETAIL MARK NO.
X001 — REFER SHEET NO.
1. F.F.L. --FINISHED FLOOR LEVEL
2. S.F.L. --STRUCTURAL FLOOR LEVEL
3. (R) --REVERSED DETAIL

NO.	DATE	REVISED	BY
G	16/07/2019	GENERAL REVISED	
F	26/05/2019	GENERAL REVISED	
E	17/01/2019	GENERAL REVISED	
D	22/12/2018	GENERAL REVISED	
C	04/12/2018	GENERAL REVISED	
B	24/11/2018	GENERAL REVISED	
A	10/9/2018	GENERAL REVISED	

JOB NO. : J-837

PROJECT :
URA KWUN TONG TOWN CENTRE REDEVELOPMENT (AREA 2 & 3) AT NKIL 6514, KWUN TONG, KWLOON

TITLE :
PART ELEVATION OF CURTAIN WALL AT TOWER 2

DATE : 04-JUL-18 | SCALE : 1:60 (A1)

DRAWN BY : ASING | CHECKED BY : –

美特鋁質有限公司
MIDI ALUMINIUM FABRICATOR LTD.
Units 6-8, Sunray Industrial Centre, 1/F
610 Cha Kwo Ling Road, Kowloon
Tel:23489211-4 Fax:(852)27727666

DWG NO. : J837-CW-2205 | REV. : G

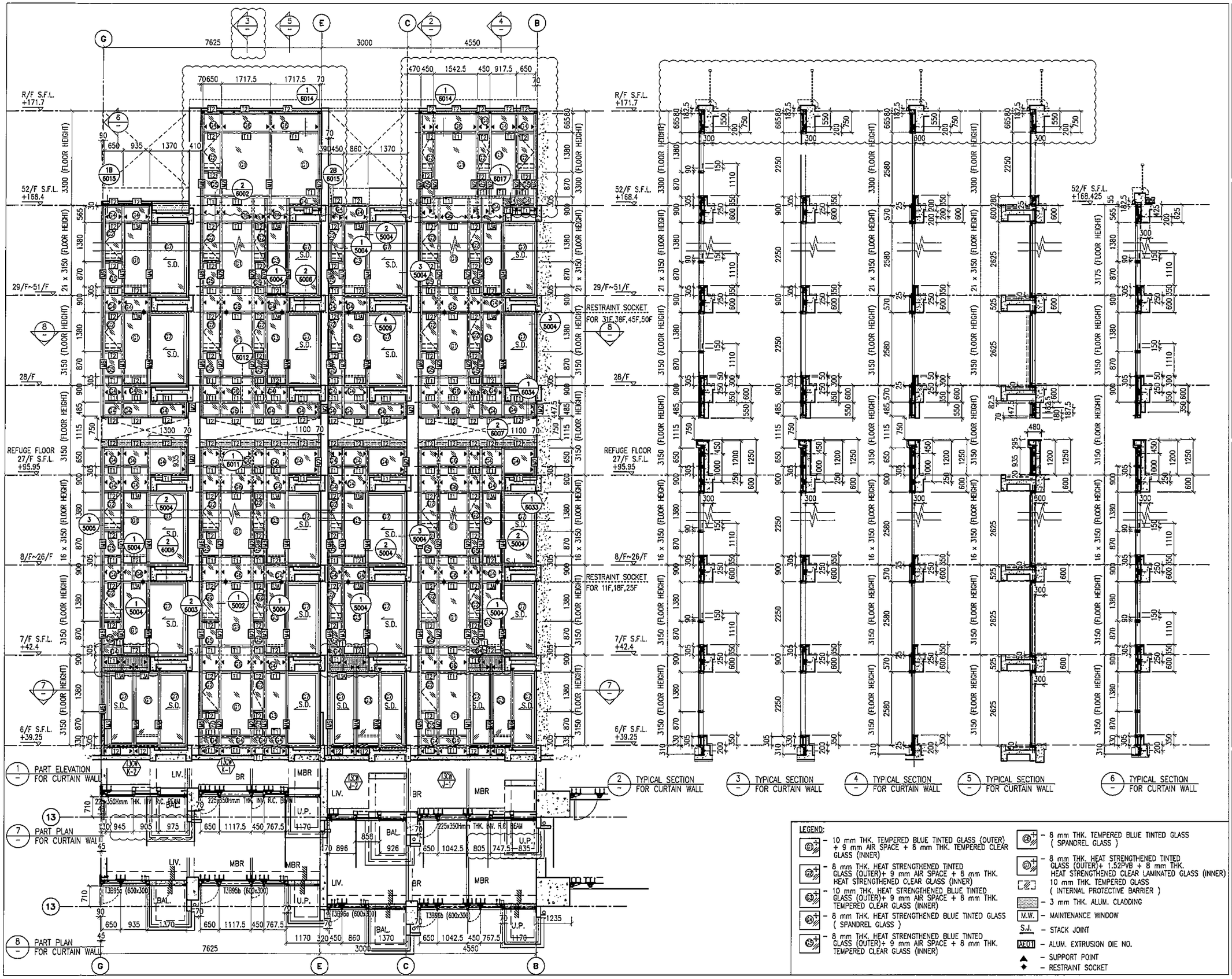

1 PART ELEVATION FOR CURTAIN WALL

7 PART PLAN FOR CURTAIN WALL

8 PART PLAN FOR CURTAIN WALL

2 TYPICAL SECTION FOR CURTAIN WALL

3 TYPICAL SECTION FOR CURTAIN WALL

4 TYPICAL SECTION FOR CURTAIN WALL

5 TYPICAL SECTION FOR CURTAIN WALL

6 TYPICAL SECTION FOR CURTAIN WALL

LEGEND:

- G1+ – 10 mm THK. TEMPERED BLUE TINTED GLASS (OUTER) + 9 mm AIR SPACE + 8 mm THK. TEMPERED CLEAR GLASS (INNER)
- G2+ – 8 mm THK. HEAT STRENGTHENED TINTED GLASS (OUTER)+ 9 mm AIR SPACE + 8 mm THK. HEAT STRENGTHENED CLEAR GLASS (INNER)
- G3+ – 10 mm THK. HEAT STRENGTHENED BLUE TINTED GLASS (OUTER)+ 9 mm AIR SPACE + 8 mm THK. TEMPERED CLEAR GLASS (INNER)
- G4+ – 8 mm THK. HEAT STRENGTHENED BLUE TINTED GLASS (SPANDREL GLASS)
- G5+ – 8 mm THK. HEAT STRENGTHENED BLUE TINTED GLASS (OUTER)+ 9 mm AIR SPACE + 8 mm THK. TEMPERED CLEAR GLASS (INNER)
- G6+ – 8 mm THK. TEMPERED BLUE TINTED GLASS (SPANDREL GLASS)
- G7+ – 8 mm THK. HEAT STRENGTHENED TINTED GLASS (OUTER)+ 1.52PVB + 8 mm THK. HEAT STRENGTHENED CLEAR LAMINATED GLASS (INNER) 10 mm THK. TEMPERED GLASS (INTERNAL PROTECTIVE BARRIER)
- 3 mm THK. ALUM. CLADDING
- M.W. – MAINTENANCE WINDOW
- S.J. – STACK JOINT
- AE01 – ALUM. EXTRUSION DIE NO.
- ▲ – SUPPORT POINT
- ◆ – RESTRAINT SOCKET

B.O. REF :

CLIENT :
信和置業有限公司
Sino Land Company Limited

ARCHITECT :
WONG TUNG & PARTNERS LIMITED
ARCHITECTS & PLANNERS

MAIN CONTRACTOR :
CR Construction Company Limited

STRUCTURAL ENGINEER :
AECOM

FACADE CONSULTANT:
AECOM

NOTE :
1. ALL DIMENSIONS ARE IN mm.
2. ALL ELEVATIONS ARE VIEWED FROM OUTSIDE.
3. ALL DIMENSIONS TO BE VERIFIED ON SITE BEFORE FABRICATION.

LEGEND :
- X1 / XC01 — DETAIL MARK NO. / REFER SHEET NO.
1. F.F.L. --FINISHED FLOOR LEVEL
2. S.F.L. --STRUCTURAL FLOOR LEVEL
3. /R --REVERSED DETAIL

NO.	DATE	REVISED	BY
H	16/07/2019	GENERAL REVISED	
G	26/05/2019	GENERAL REVISED	
F	07/04/2019	GENERAL REVISED	
E	17/01/2019	GENERAL REVISED	
D	22/12/2018	GENERAL REVISED	
C	04/12/2018	GENERAL REVISED	
B	24/11/2018	GENERAL REVISED	
A	10/9/2018	GENERAL REVISED	

JOB NO. : J-837

PROJECT :
URA KWUN TONG TOWN CENTRE REDEVELOPMENT (AREA 2 & 3) AT NKIL 6514, KWUN TONG, KWLOON

TITLE :
PART ELEVATION OF CURTAIN WALL AT TOWER 3

DATE : 04-JUL-18 | SCALE : 1:60 (A1)

DRAWN BY : ASING | CHECKED BY : –

美特鋁質有限公司
MIDI ALUMINIUM FABRICATOR LTD.
Units 6-8, Sunray Industrial Centre, 1/F
610 Cha Kwo Ling Road, Kowloon
Tel:23489211-4 Fax:(852)27727666

DWG NO. : J837-CW-2305 | REV. : H

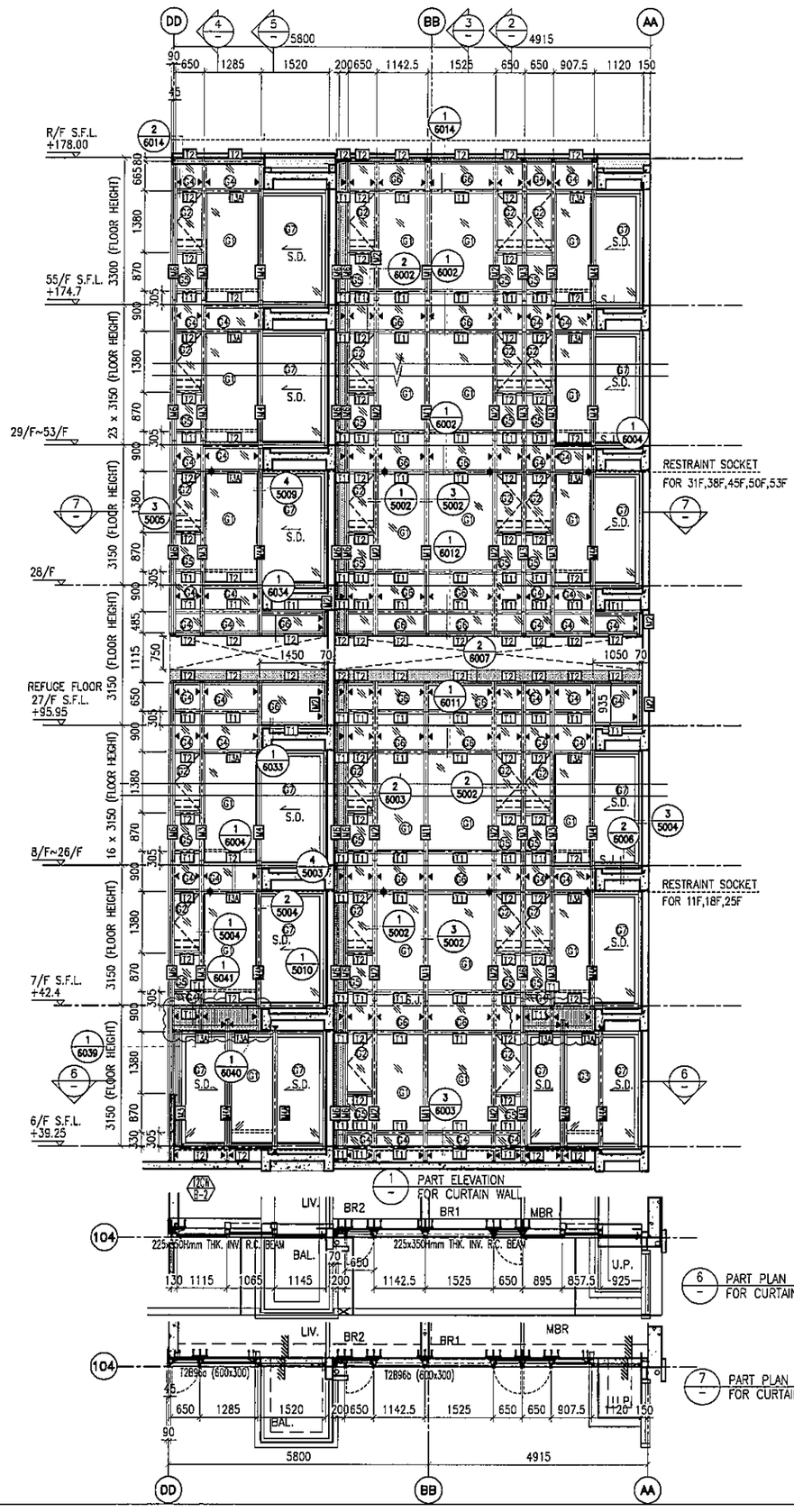

6 PART PLAN FOR CURTAIN WALL

7 PART PLAN FOR CURTAIN WALL

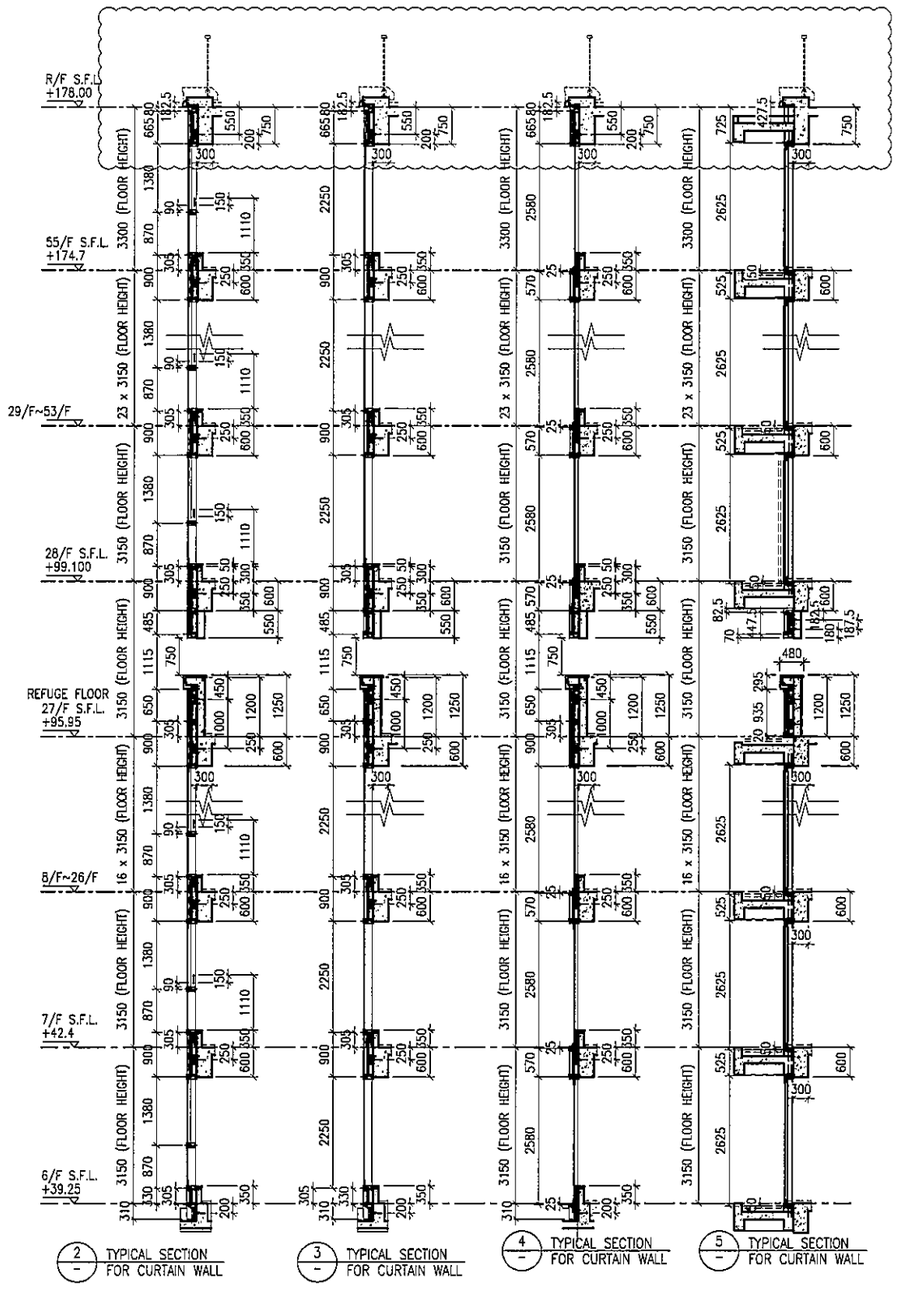

2 TYPICAL SECTION FOR CURTAIN WALL

3 TYPICAL SECTION FOR CURTAIN WALL

4 TYPICAL SECTION FOR CURTAIN WALL

5 TYPICAL SECTION FOR CURTAIN WALL

LEGEND:

- G1+ – 10 mm THK. TEMPERED BLUE TINTED GLASS (OUTER) + 9 mm AIR SPACE + 8 mm THK. TEMPERED CLEAR GLASS (INNER)
- G2+ – 8 mm THK. HEAT STRENGTHENED TINTED GLASS (OUTER)+ 9 mm AIR SPACE + 8 mm THK. HEAT STRENGTHENED CLEAR GLASS (INNER)
- G3+ – 10 mm THK. HEAT STRENGTHENED BLUE TINTED GLASS (OUTER)+ 9 mm AIR SPACE + 8 mm THK. TEMPERED CLEAR GLASS (INNER)
- G4+ – 8 mm THK. HEAT STRENGTHENED BLUE TINTED GLASS (SPANDREL GLASS)
- G5+ – 8 mm THK. HEAT STRENGTHENED BLUE TINTED GLASS (OUTER)+ 9 mm AIR SPACE + 8 mm THK. TEMPERED CLEAR GLASS (INNER)
- G6+ – 8 mm THK. TEMPERED BLUE TINTED GLASS (SPANDREL GLASS)
- G7+ – 8 mm THK. HEAT STRENGTHENED TINTED GLASS (OUTER)+ 1.52PVB + 8 mm THK. HEAT STRENGTHENED CLEAR LAMINATED GLASS (INNER) 10 mm THK. TEMPERED GLASS (INTERNAL PROTECTIVE BARRIER)
- – 3 mm THK. ALUM. CLADDING
- M.W. – MAINTENANCE WINDOW
- S.J. – STACK JOINT
- AE01 – ALUM. EXTRUSION DIE NO.
- ▲ – SUPPORT POINT
- ✦ – RESTRAINT SOCKET

B.D. REF :

CLIENT :
信和置業有限公司
Sino Land Company Limited

ARCHITECT :
WONG TUNG & PARTNERS LIMITED
ARCHITECTS & PLANNERS

MAIN CONTRACTOR :
CR Construction Company Limited

STRUCTURAL ENGINEER :
AECOM

FACADE CONSULTANT:
AECOM

NOTE :
1. ALL DIMENSIONS ARE IN mm.
2. ALL ELEVATIONS ARE VIEWED FROM OUTSIDE.
3. ALL DIMENSIONS TO BE VERIFIED ON SITE BEFORE FABRICATION.

LEGEND :
- X1 / X001 – DETAIL MARK NO. / REFER SHEET NO.
1. F.F.L. --FINISHED FLOOR LEVEL
2. S.F.L. --STRUCTURAL FLOOR LEVEL
3. (R) --REVERSED DETAIL

NO.	DATE	REVISED	BY
G	16/07/2019	GENERAL REVISED	
F	26/05/2019	GENERAL REVISED	
E	17/01/2019	GENERAL REVISED	
D	22/12/2018	GENERAL REVISED	
C	04/12/2018	GENERAL REVISED	
B	24/11/2018	GENERAL REVISED	
A	10/9/2018	GENERAL REVISED	

JOB NO. : J-837

PROJECT :
URA KWUN TONG TOWN CENTRE REDEVELOPMENT (AREA 2 & 3) AT NKIL 6514, KWUN TONG, KWLOON

TITLE :
PART ELEVATION OF CURTAIN WALL AT TOWER 2

DATE : 04-JUL-18 | SCALE : 1:60 (A1)

DRAWN BY : ASING | CHECKED BY : –

美特鋁質有限公司
MIDI ALUMINIUM FABRICATOR LTD.
Units 6-8, Sunray Industrial Centre, 1/F
610 Cha Kwo Ling Road, Kowloon
Tel:23489211-4 Fax:(852)27727666

DWG NO. : J837-CW-2206 | REV. : G

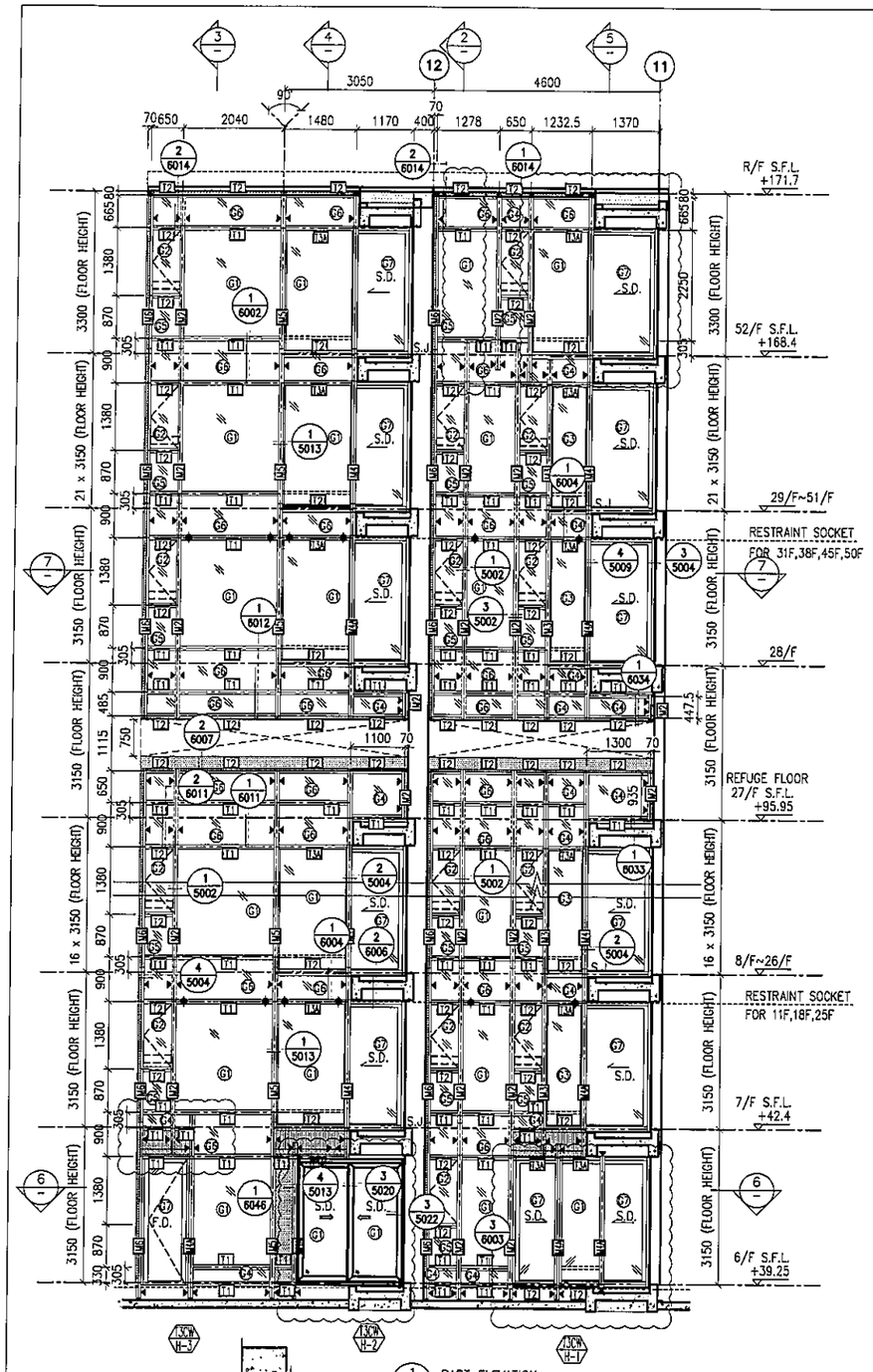

1 PART ELEVATION FOR CURTAIN WALL

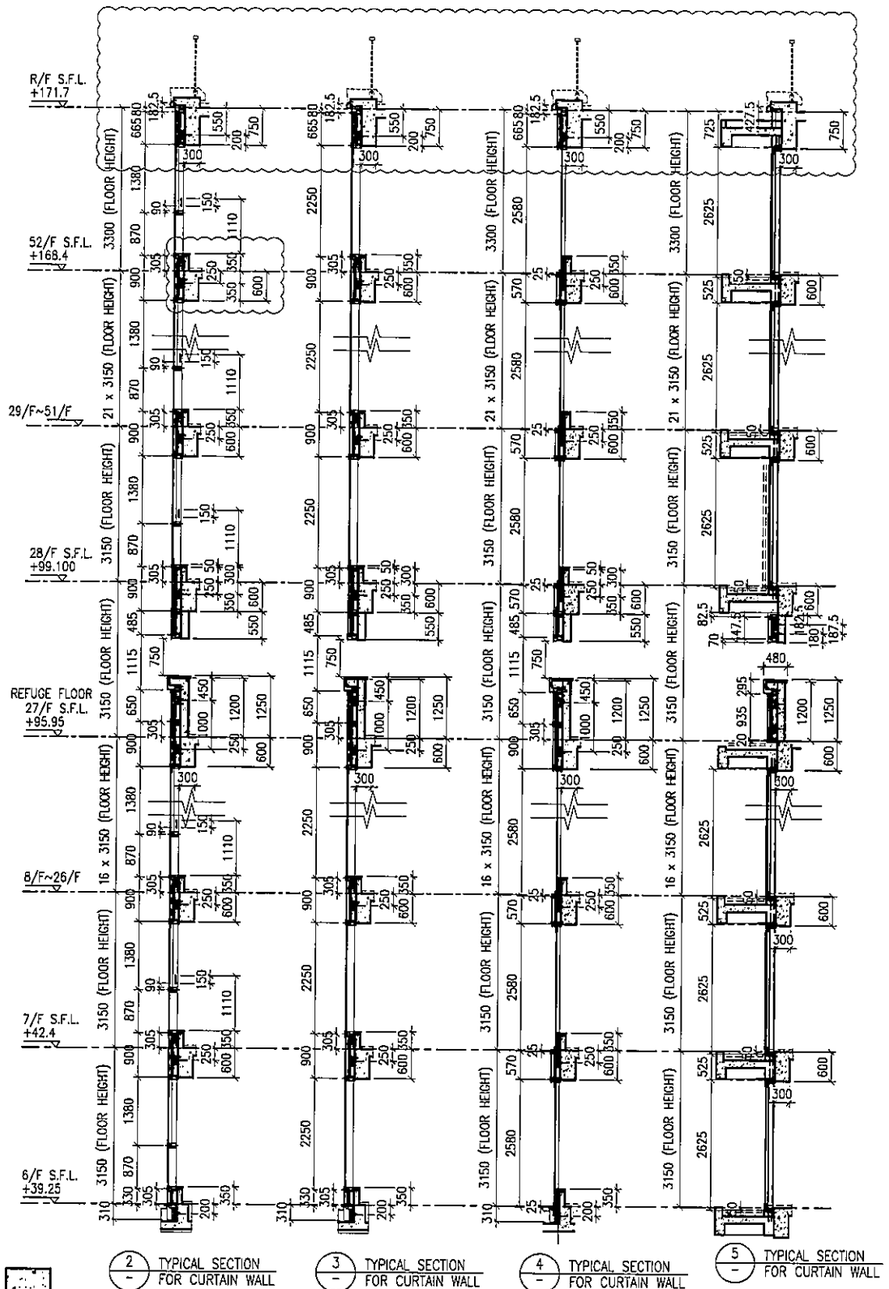

2 TYPICAL SECTION FOR CURTAIN WALL

3 TYPICAL SECTION FOR CURTAIN WALL

4 TYPICAL SECTION FOR CURTAIN WALL

5 TYPICAL SECTION FOR CURTAIN WALL

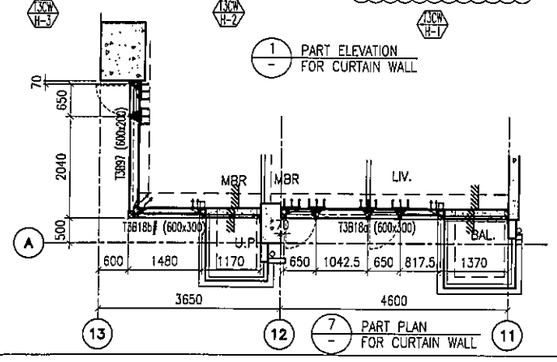

7 PART PLAN FOR CURTAIN WALL

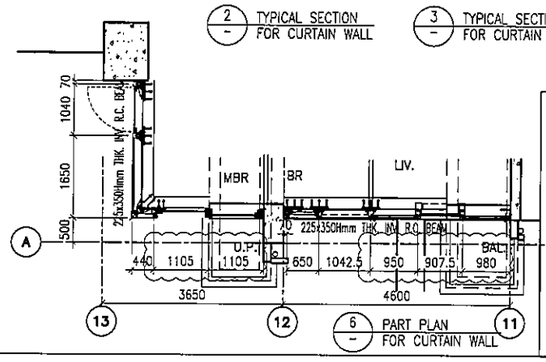

6 PART PLAN FOR CURTAIN WALL

LEGEND:

- G1 – 10 mm THK. TEMPERED BLUE TINTED GLASS (OUTER) + 9 mm AIR SPACE + 8 mm THK. TEMPERED CLEAR GLASS (INNER)
- G2 – 8 mm THK. HEAT STRENGTHENED TINTED GLASS (OUTER)+ 9 mm AIR SPACE + 8 mm THK. HEAT STRENGTHENED CLEAR GLASS (INNER)
- G3 – 10 mm THK. HEAT STRENGTHENED BLUE TINTED GLASS (OUTER)+ 9 mm AIR SPACE + 8 mm THK. TEMPERED CLEAR GLASS (INNER)
- G4 – 8 mm THK. HEAT STRENGTHENED BLUE TINTED GLASS (SPANDREL GLASS)
- G5 – 8 mm THK. HEAT STRENGTHENED BLUE TINTED GLASS (OUTER)+ 9 mm AIR SPACE + 8 mm THK. TEMPERED CLEAR GLASS (INNER)
- G6 – 8 mm THK. TEMPERED BLUE TINTED GLASS (SPANDREL GLASS)
- G7 – 8 mm THK. HEAT STRENGTHENED TINTED GLASS (OUTER)+ 1.52PVB + 8 mm THK. HEAT STRENGTHENED CLEAR LAMINATED GLASS (INNER)
- 10 mm THK. TEMPERED GLASS (INTERNAL PROTECTIVE BARRIER)
- 3 mm THK. ALUM. CLADDING
- M.W. – MAINTENANCE WINDOW
- S.J. – STACK JOINT
- AE01 – ALUM. EXTRUSION DIE NO.
- ▲ – SUPPORT POINT
- ✦ – RESTRAINT SOCKET

B.D. REF :

CLIENT :
信和置業有限公司
Sino Land Company Limited

ARCHITECT :
WONG TUNG & PARTNERS LIMITED
ARCHITECTS & PLANNERS

MAIN CONTRACTOR :
CR Construction Company Limited

STRUCTURAL ENGINEER :
AECOM

FACADE CONSULTANT:
AECOM

NOTE :
1. ALL DIMENSIONS ARE IN mm.
2. ALL ELEVATIONS ARE VIEWED FROM OUTSIDE.
3. ALL DIMENSIONS TO BE VERIFIED ON SITE BEFORE FABRICATION.

LEGEND :
- X1 / X001 – DETAIL MARK NO. / REFER SHEET NO.
1. F.F.L. --FINISHED FLOOR LEVEL
2. S.F.L. --STRUCTURAL FLOOR LEVEL
3. (R) --REVERSED DETAIL

NO.	DATE	REVISED	BY
H	16/07/2019	GENERAL REVISED	
G	26/05/2019	GENERAL REVISED	
F	07/04/2019	GENERAL REVISED	
E	22/12/2018	GENERAL REVISED	
D	22/12/2018	GENERAL REVISED	
C	04/12/2018	GENERAL REVISED	
B	24/11/2018	GENERAL REVISED	
A	10/9/2018	GENERAL REVISED	

JOB NO. : J-837

PROJECT :
URA KWUN TONG TOWN CENTRE REDEVELOPMENT (AREA 2 & 3) AT NKIL 6514, KWUN TONG, KWLOON

TITLE :
PART ELEVATION OF CURTAIN WALL AT TOWER 3

DATE : 04-JUL-18 | SCALE : 1:60 (A1)

DRAWN BY : ASING | CHECKED BY : –

美特鋁質有限公司
MIDI ALUMINIUM FABRICATOR LTD.
Units 6-8, Sunray Industrial Centre, 1/F
610 Cha Kwo Ling Road, Kowloon
Tel:23489211-4 Fax:(852)27727666

DWG NO. : J837-CW-2306 | REV. : H

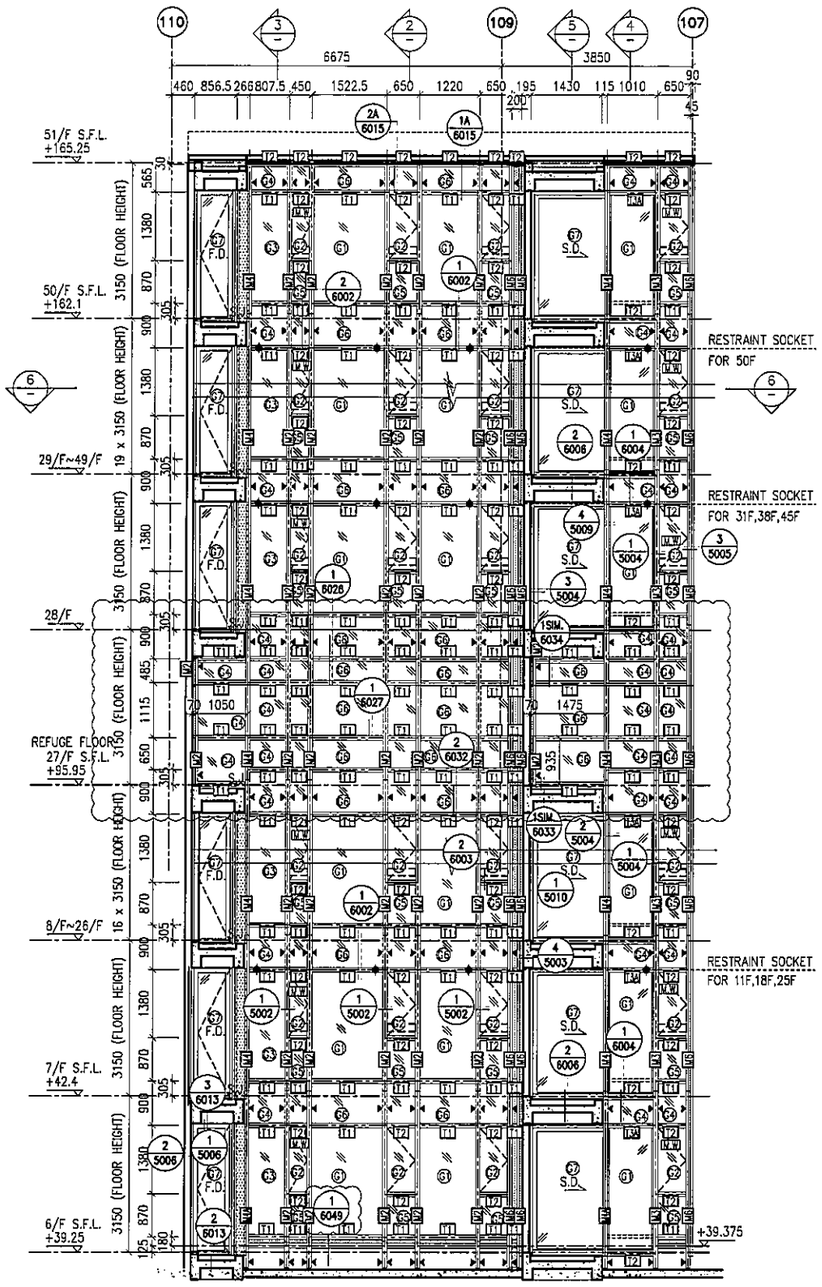

1 PART ELEVATION FOR CURTAIN WALL

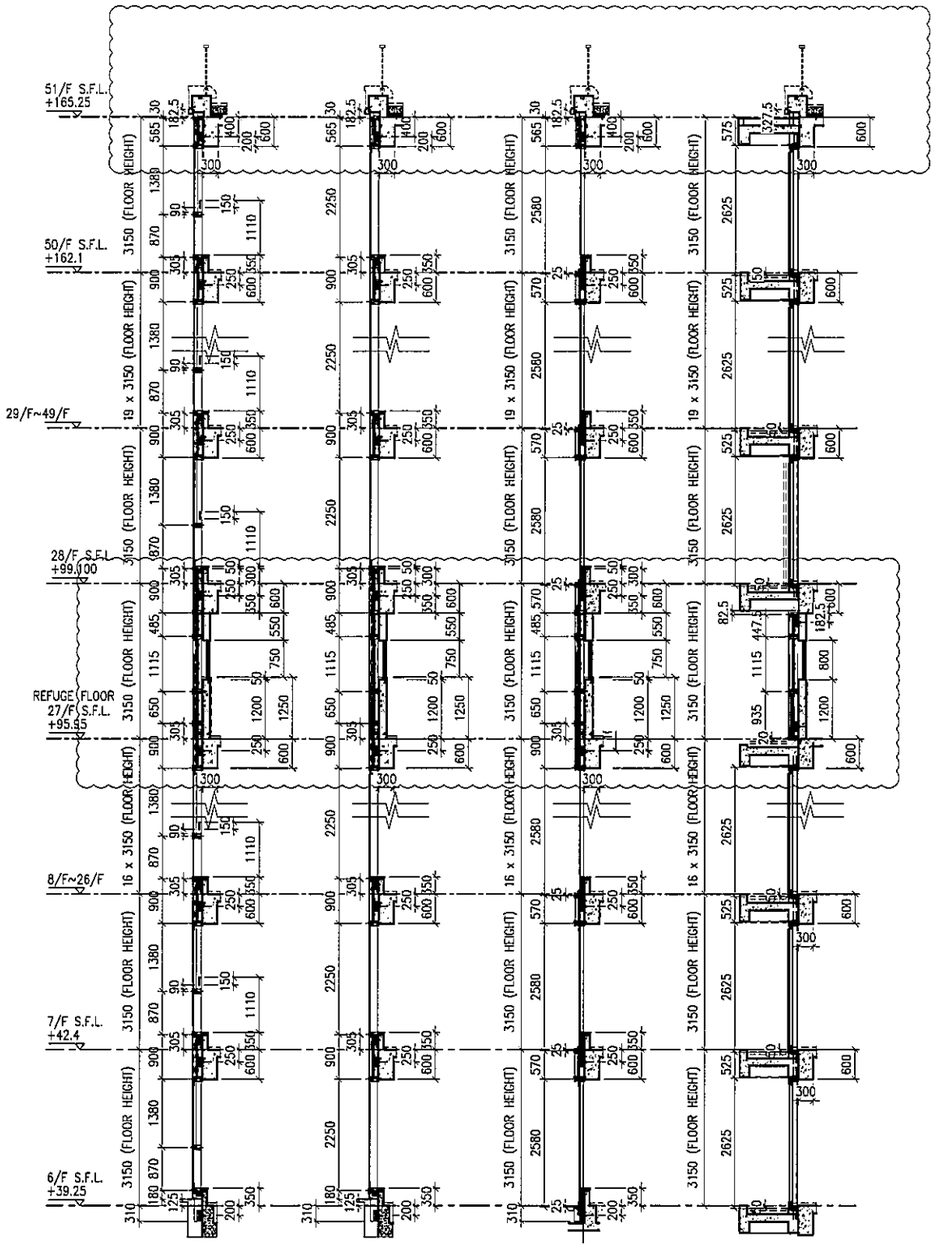

2 TYPICAL SECTION FOR CURTAIN WALL

3 TYPICAL SECTION FOR CURTAIN WALL

4 TYPICAL SECTION FOR CURTAIN WALL

5 TYPICAL SECTION FOR CURTAIN WALL

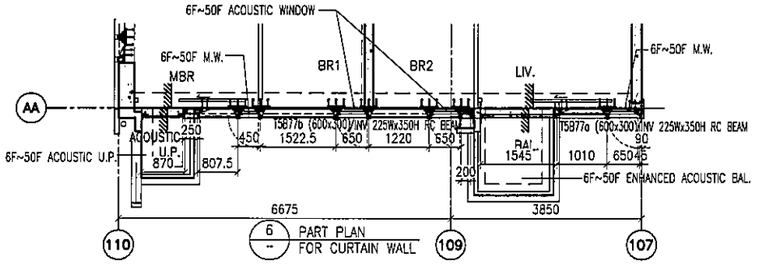

6 PART PLAN FOR CURTAIN WALL

LEGEND:

- 10 mm THK. TEMPERED BLUE TINTED GLASS (OUTER) + 9 mm AIR SPACE + 8 mm THK. TEMPERED CLEAR GLASS (INNER)
- 8 mm THK. HEAT STRENGTHENED TINTED GLASS (OUTER)+ 9 mm AIR SPACE + 8 mm THK. HEAT STRENGTHENED CLEAR GLASS (INNER)
- 10 mm THK. HEAT STRENGTHENED BLUE TINTED GLASS (OUTER)+ 9 mm AIR SPACE + 8 mm THK. TEMPERED CLEAR GLASS (INNER)
- 8 mm THK. HEAT STRENGTHENED BLUE TINTED GLASS (SPANDREL GLASS)
- 8 mm THK. HEAT STRENGTHENED BLUE TINTED GLASS (OUTER)+ 9 mm AIR SPACE + 8 mm THK. TEMPERED CLEAR GLASS (INNER)
- 8 mm THK. TEMPERED BLUE TINTED GLASS (SPANDREL GLASS)
- 8 mm THK. HEAT STRENGTHENED TINTED GLASS (OUTER)+ 1.52PVB + 8 mm THK. HEAT STRENGTHENED CLEAR LAMINATED GLASS (INNER)
- 10 mm THK. TEMPERED GLASS (INTERNAL PROTECTIVE BARRIER)
- 3 mm THK. ALUM. CLADDING
- M.W. – MAINTENANCE WINDOW
- S.J. – STACK JOINT
- AE01 – ALUM. EXTRUSION DIE NO.
- ▲ – SUPPORT POINT
- ✦ – RESTRAINT SOCKET

B.D. REF :

CLIENT :
信和置業有限公司
Sino Land Company Limited

ARCHITECT :
WONG TUNG & PARTNERS LIMITED
ARCHITECTS & PLANNERS

MAIN CONTRACTOR :
CR Construction Company Limited

STRUCTURAL ENGINEER :
AECOM

FACADE CONSULTANT:
AECOM

NOTE :
1. ALL DIMENSIONS ARE IN mm.
2. ALL ELEVATIONS ARE VIEWED FROM OUTSIDE.
3. ALL DIMENSIONS TO BE VERIFIED ON SITE BEFORE FABRICATION.

LEGEND :
X1 / X001 — DETAIL MARK NO. / REFER SHEET NO.
1. F.F.L. --FINISHED FLOOR LEVEL
2. S.F.L. --STRUCTURAL FLOOR LEVEL
3. (/R) --REVERSED DETAIL

NO.	DATE	REVISED	BY
F	16/07/2019	GENERAL REVISED	
E	17/01/2019	GENERAL REVISED	
D	22/12/2018	GENERAL REVISED	
C	04/12/2018	GENERAL REVISED	
B	24/11/2018	GENERAL REVISED	
A	10/9/2018	GENERAL REVISED	

JOB NO. : J-837

PROJECT :
URA KWUN TONG TOWN CENTRE REDEVELOPMENT (AREA 2 & 3) AT NKIL 6514, KWUN TONG, KWLOON

TITLE :
PART ELEVATION OF CURTAIN WALL AT TOWER 5

DATE : 04-JUL-18 | SCALE : 1:60 (A1)

DRAWN BY : ASING | CHECKED BY : –

美特鋁製有限公司
MIDI ALUMINIUM FABRICATOR LTD.
Units 6-8, Sunray Industrial Centre, 1/F
610 Cha Kwo Ling Road, Kowloon
Tel:23489211-4 Fax:(852)27727666

DWG NO. : J837-CW-2505 | REV. : F

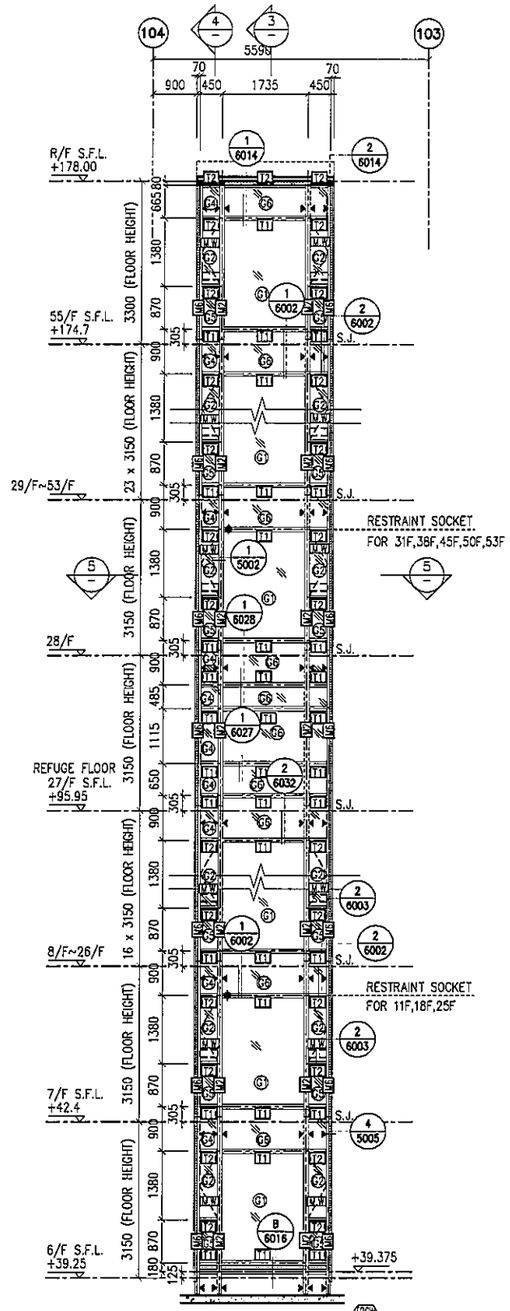

1 / – PART ELEVATION FOR CURTAIN WALL

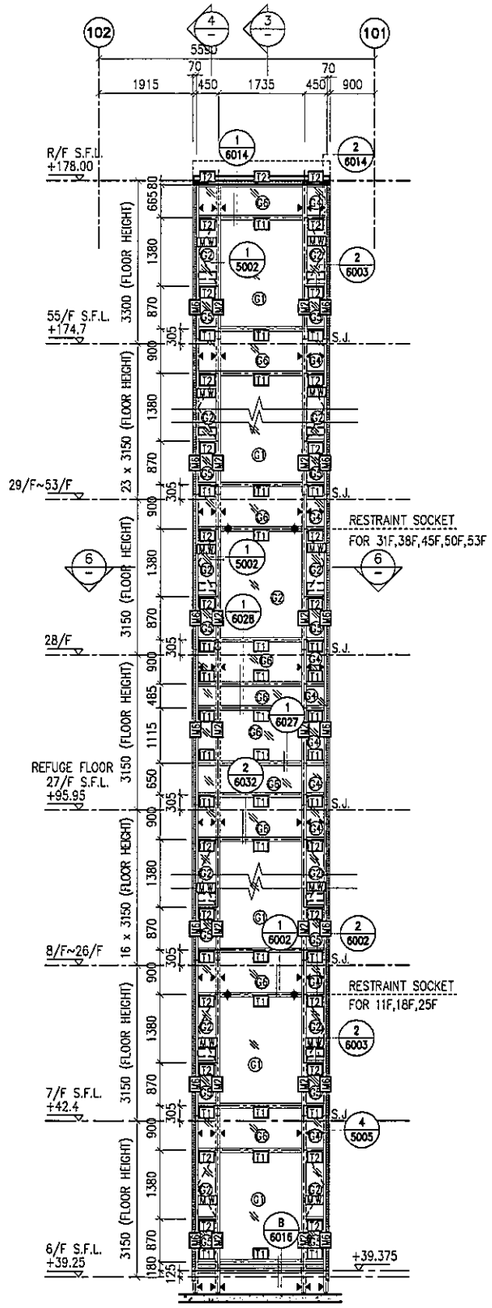

2 / – PART ELEVATION FOR CURTAIN WALL

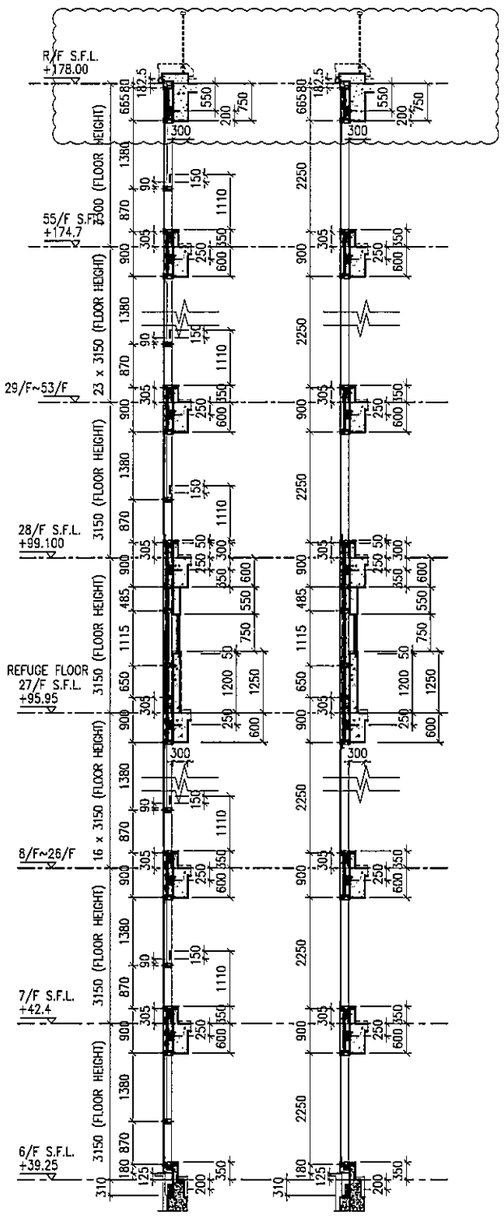

3 / – TYPICAL SECTION FOR CURTAIN WALL

4 / – TYPICAL SECTION FOR CURTAIN WALL

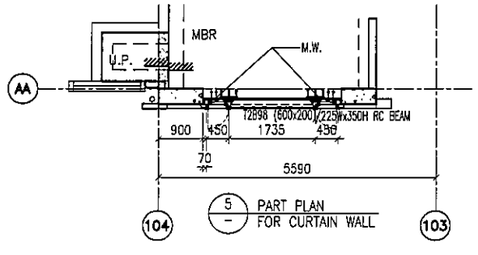

5 / – PART PLAN FOR CURTAIN WALL

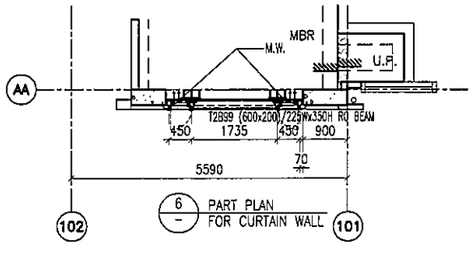

6 / – PART PLAN FOR CURTAIN WALL

LEGEND:

- – 10 mm THK. TEMPERED BLUE TINTED GLASS (OUTER) + 9 mm AIR SPACE + 8 mm THK. TEMPERED CLEAR GLASS (INNER)
- – 8 mm THK. HEAT STRENGTHENED TINTED GLASS (OUTER)+ 9 mm AIR SPACE + 8 mm THK. HEAT STRENGTHENED CLEAR GLASS (INNER)
- – 10 mm THK. HEAT STRENGTHENED BLUE TINTED GLASS (OUTER)+ 9 mm AIR SPACE + 8 mm THK. TEMPERED CLEAR GLASS (INNER)
- – 8 mm THK. HEAT STRENGTHENED BLUE TINTED GLASS (SPANDREL GLASS)
- – 8 mm THK. HEAT STRENGTHENED BLUE TINTED GLASS (OUTER)+ 9 mm AIR SPACE + 8 mm THK. TEMPERED CLEAR GLASS (INNER)
- – 8 mm THK. TEMPERED BLUE TINTED GLASS (SPANDREL GLASS)
- – 8 mm THK. HEAT STRENGTHENED TINTED GLASS (OUTER)+ 1.52PVB + 8 mm THK. HEAT STRENGTHENED CLEAR LAMINATED GLASS (INNER) 10 mm THK. TEMPERED GLASS (INTERNAL PROTECTIVE BARRIER)
- – 3 mm THK. ALUM. CLADDING
- M.W. – MAINTENANCE WINDOW
- S.J. – STACK JOINT
- AE01 – ALUM. EXTRUSION DIE NO.
- ▲ – SUPPORT POINT
- ✦ – RESTRAINT SOCKET

B.D. REF :

CLIENT :
信和置業有限公司
Sino Land Company Limited

ARCHITECT : WONG TUNG & PARTNERS LIMITED
ARCHITECTS & PLANNERS

MAIN CONTRACTOR :
CR Construction Company Limited

STRUCTURAL ENGINEER :
AECOM

FACADE CONSULTANT:
AECOM

NOTE :
1. ALL DIMENSIONS ARE IN mm.
2. ALL ELEVATIONS ARE VIEWED FROM OUTSIDE.
3. ALL DIMENSIONS TO BE VERIFIED ON SITE BEFORE FABRICATION.

LEGEND :
X1 / X001 — DETAIL MARK NO. / REFER SHEET NO.
1. F.F.L. --FINISHED FLOOR LEVEL
2. S.F.L. --STRUCTURAL FLOOR LEVEL
3. /R --REVERSED DETAIL

NO.	DATE	REVISED	BY
F	16/07/2019	GENERAL REVISED	
E	17/01/2019	GENERAL REVISED	
D	22/12/2018	GENERAL REVISED	
C	04/12/2018	GENERAL REVISED	
B	24/11/2018	GENERAL REVISED	
A	10/9/2018	GENERAL REVISED	

JOB NO. : J-837

PROJECT :
URA KWUN TONG TOWN CENTRE
REDEVELOPMENT (AREA 2 & 3) AT
NKIL 6514, KWUN TONG, KWLOON

TITLE :
PART ELEVATION
OF CURTAIN WALL
AT TOWER 2

DATE : 04-JUL-18 | SCALE : 1:60 (A1)

DRAWN BY : ASING | CHECKED BY : –

美特鋁質有限公司
MIDI ALUMINIUM FABRICATOR LTD.
Units 6-8, Sunray Industrial Centre, 1/F
610 Cha Kwo Ling Road, Kowloon
Tel:23489211-4 Fax:(852)27727666

DWG NO. : J837-CW-2207 | REV. : F

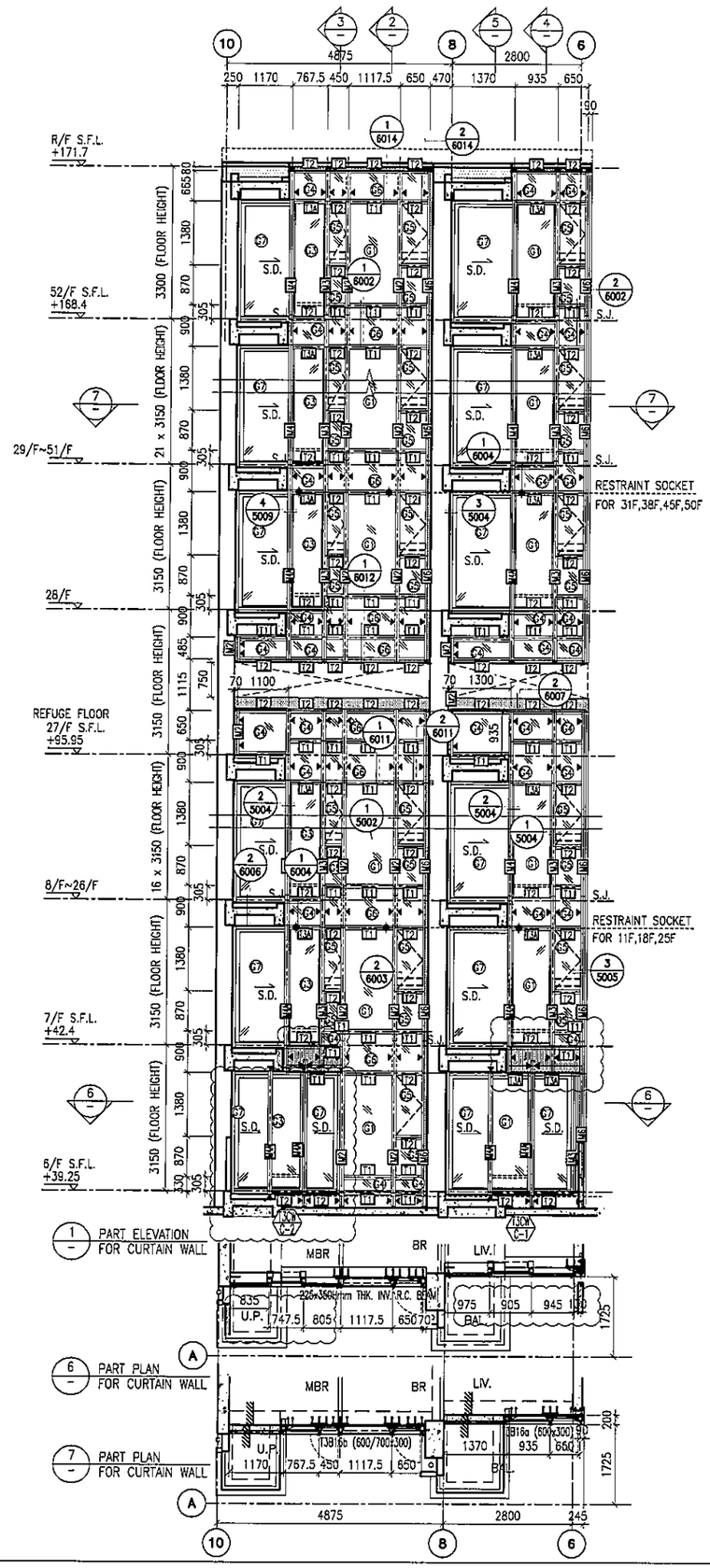

1 PART ELEVATION FOR CURTAIN WALL

6 PART PLAN FOR CURTAIN WALL

7 PART PLAN FOR CURTAIN WALL

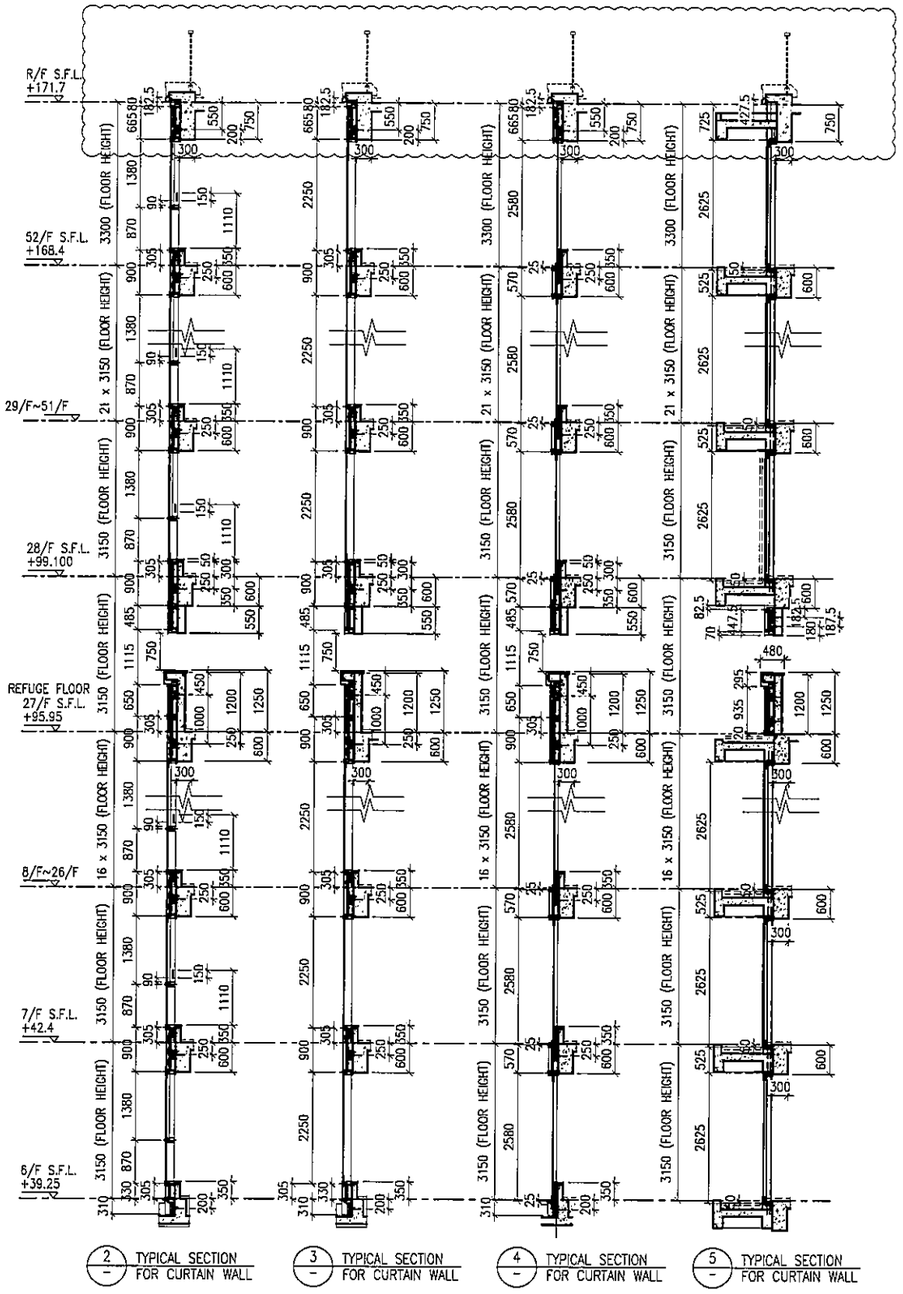

2 TYPICAL SECTION FOR CURTAIN WALL

3 TYPICAL SECTION FOR CURTAIN WALL

4 TYPICAL SECTION FOR CURTAIN WALL

5 TYPICAL SECTION FOR CURTAIN WALL

LEGEND:

- 10 mm THK. TEMPERED BLUE TINTED GLASS (OUTER) + 9 mm AIR SPACE + 8 mm THK. TEMPERED CLEAR GLASS (INNER)
- 8 mm THK. HEAT STRENGTHENED TINTED GLASS (OUTER)+ 9 mm AIR SPACE + 8 mm THK. HEAT STRENGTHENED CLEAR GLASS (INNER)
- 10 mm THK. HEAT STRENGTHENED BLUE TINTED GLASS (OUTER)+ 9 mm AIR SPACE + 8 mm THK. TEMPERED CLEAR GLASS (INNER)
- 8 mm THK. HEAT STRENGTHENED BLUE TINTED GLASS (SPANDREL GLASS)
- 8 mm THK. HEAT STRENGTHENED BLUE TINTED GLASS (OUTER)+ 9 mm AIR SPACE + 8 mm THK. TEMPERED CLEAR GLASS (INNER)
- 8 mm THK. TEMPERED BLUE TINTED GLASS (SPANDREL GLASS)
- 8 mm THK. HEAT STRENGTHENED TINTED GLASS (OUTER)+ 1.52PVB + 8 mm THK. HEAT STRENGTHENED CLEAR LAMINATED GLASS (INNER) 10 mm THK. TEMPERED GLASS (INTERNAL PROTECTIVE BARRIER)
- 3 mm THK. ALUM. CLADDING
- M.W. – MAINTENANCE WINDOW
- S.J. – STACK JOINT
- AE01 – ALUM. EXTRUSION DIE NO.
- ▲ – SUPPORT POINT
- ✦ – RESTRAINT SOCKET

B.D. REF :

CLIENT :
信和置業有限公司
Sino Land Company Limited

ARCHITECT :
WONG TUNG & PARTNERS LIMITED
ARCHITECTS & PLANNERS

MAIN CONTRACTOR :
CR Construction Company Limited

STRUCTURAL ENGINEER :
AECOM

FACADE CONSULTANT:
AECOM

NOTE :
1. ALL DIMENSIONS ARE IN mm.
2. ALL ELEVATIONS ARE VIEWED FROM OUTSIDE.
3. ALL DIMENSIONS TO BE VERIFIED ON SITE BEFORE FABRICATION.

LEGEND :
X1 / XD01 — DETAIL MARK NO. / REFER SHEET NO.
1. F.F.L. --FINISHED FLOOR LEVEL
2. S.F.L. --STRUCTURAL FLOOR LEVEL
3. (VR) --REVERSED DETAIL

NO.	DATE	REVISED	BY
G	16/07/2019	GENERAL REVISED	
F	26/05/2019	GENERAL REVISED	
E	17/01/2019	GENERAL REVISED	
D	22/12/2018	GENERAL REVISED	
C	04/12/2018	GENERAL REVISED	
B	24/11/2018	GENERAL REVISED	
A	10/9/2018	GENERAL REVISED	

JOB NO. : J-837

PROJECT :
URA KWUN TONG TOWN CENTRE REDEVELOPMENT (AREA 2 & 3) AT NKIL 6514, KWUN TONG, KWLOON

TITLE :
PART ELEVATION OF CURTAIN WALL AT TOWER 3

DATE : 04-JUL-18 | SCALE : 1:60 (A1)

DRAWN BY : ASING | CHECKED BY : -

美特鋁質有限公司
MIDI ALUMINIUM FABRICATOR LTD.
Units 6-8, Sunray Industrial Centre, 1/F
610 Cha Kwo Ling Road, Kowloon
Tel:23489211-4 Fax:(852)27727666

DWG NO. : J837-CW-2307 | REV. : G

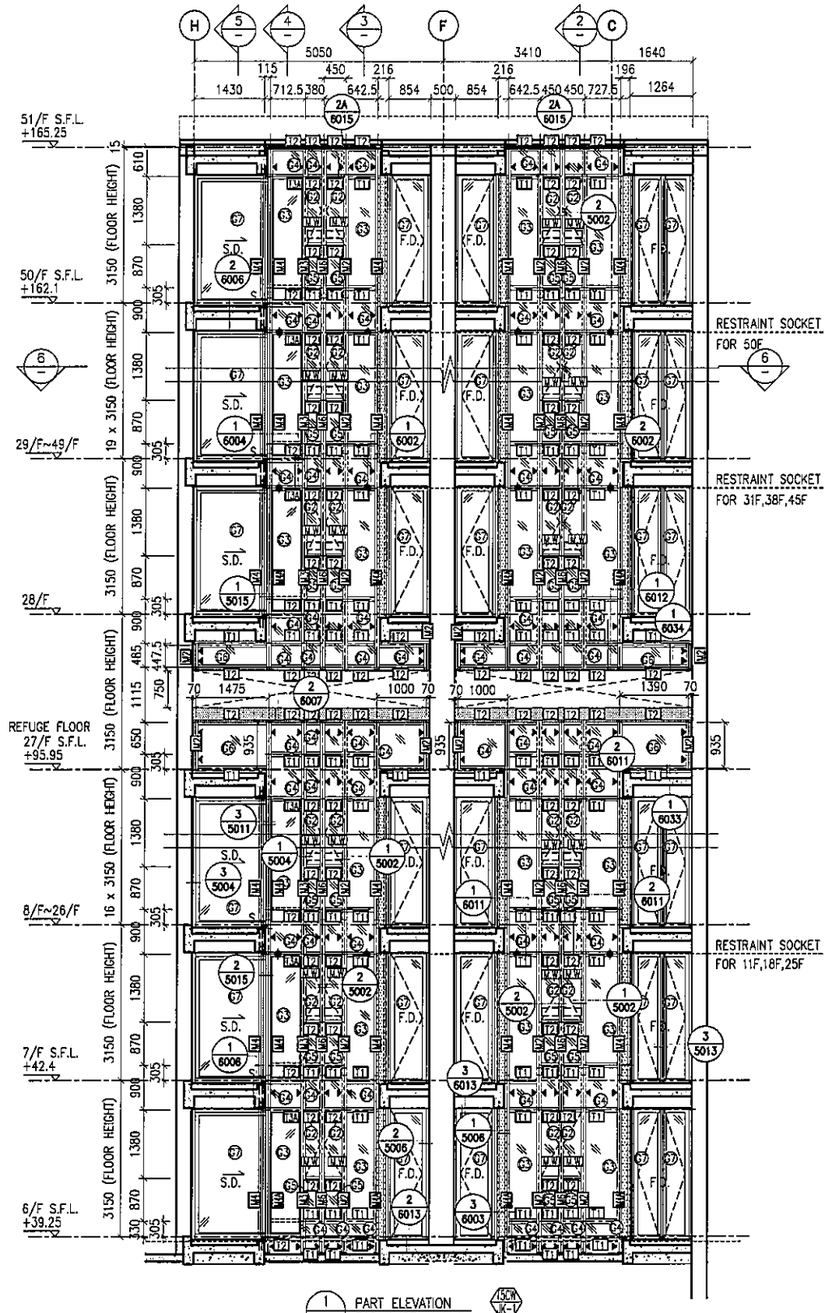

1 PART ELEVATION FOR CURTAIN WALL

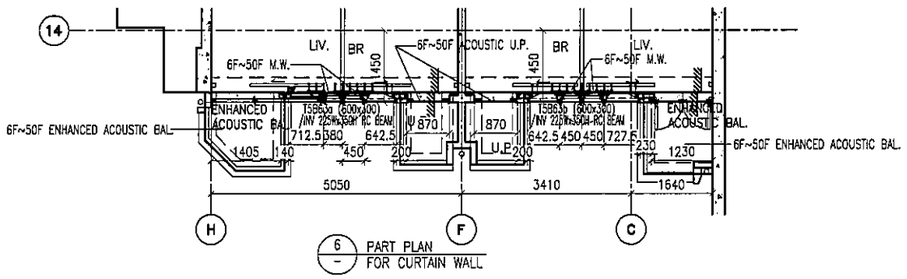

6 PART PLAN FOR CURTAIN WALL

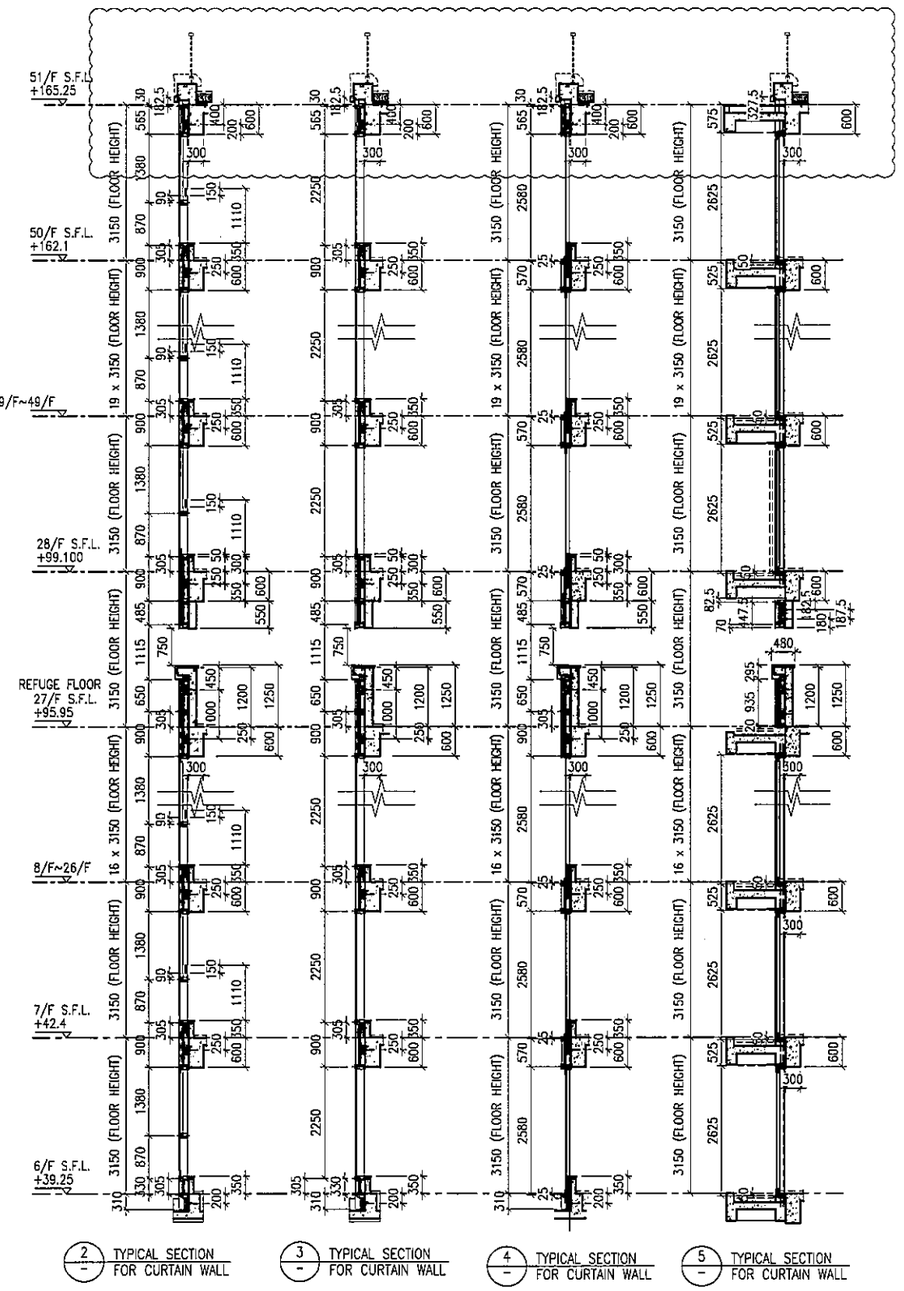

2 TYPICAL SECTION FOR CURTAIN WALL

3 TYPICAL SECTION FOR CURTAIN WALL

4 TYPICAL SECTION FOR CURTAIN WALL

5 TYPICAL SECTION FOR CURTAIN WALL

LEGEND:

- 6+ – 10 mm THK. TEMPERED BLUE TINTED GLASS (OUTER) + 9 mm AIR SPACE + 8 mm THK. TEMPERED CLEAR GLASS (INNER)
- 7+ – 8 mm THK. HEAT STRENGTHENED TINTED GLASS (OUTER)+ 9 mm AIR SPACE + 8 mm THK. HEAT STRENGTHENED CLEAR GLASS (INNER)
- 8+ – 10 mm THK. HEAT STRENGTHENED BLUE TINTED GLASS (OUTER)+ 9 mm AIR SPACE + 8 mm THK. TEMPERED CLEAR GLASS (INNER)
- 9+ – 8 mm THK. HEAT STRENGTHENED BLUE TINTED GLASS (SPANDREL GLASS)
- 10+ – 8 mm THK. HEAT STRENGTHENED BLUE TINTED GLASS (OUTER)+ 9 mm AIR SPACE + 8 mm THK. TEMPERED CLEAR GLASS (INNER)
- 6+ – 8 mm THK. TEMPERED BLUE TINTED GLASS (SPANDREL GLASS)
- 7+ – 8 mm THK. HEAT STRENGTHENED TINTED GLASS (OUTER)+ 1.52PVB + 8 mm THK. HEAT STRENGTHENED CLEAR LAMINATED GLASS (INNER) 10 mm THK. TEMPERED GLASS (INTERNAL PROTECTIVE BARRIER)
- 3 mm THK. ALUM. CLADDING
- M.W. – MAINTENANCE WINDOW
- S.J. – STACK JOINT
- AE01 – ALUM. EXTRUSION DIE NO.
- ▲ – SUPPORT POINT
- ✦ – RESTRAINT SOCKET

B.D. REF :

CLIENT :
信和置業有限公司
Sino Land Company Limited

ARCHITECT : WONG TUNG & PARTNERS LIMITED
ARCHITECTS & PLANNERS

MAIN CONTRACTOR :
CR Construction Company Limited

STRUCTURAL ENGINEER :
AECOM

FACADE CONSULTANT:
AECOM

NOTE :
1. ALL DIMENSIONS ARE IN mm.
2. ALL ELEVATIONS ARE VIEWED FROM OUTSIDE.
3. ALL DIMENSIONS TO BE VERIFIED ON SITE BEFORE FABRICATION.

LEGEND :
X1 / X001 – DETAIL MARK NO. / REFER SHEET NO.
1. F.F.L. --FINISHED FLOOR LEVEL
2. S.F.L. --STRUCTURAL FLOOR LEVEL
3. /R --REVERSED DETAIL

NO.	DATE	REVISED	BY
F	16/07/2019	GENERAL REVISED	
E	17/01/2019	GENERAL REVISED	
D	22/12/2018	GENERAL REVISED	
C	04/12/2018	GENERAL REVISED	
B	24/11/2018	GENERAL REVISED	
A	10/9/2018	GENERAL REVISED	

JOB NO. : J-837

PROJECT :
URA KWUN TONG TOWN CENTRE REDEVELOPMENT (AREA 2 & 3) AT NKIL 6514, KWUN TONG, KWLOON

TITLE :
PART ELEVATION OF CURTAIN WALL AT TOWER 5

DATE : 04-JUL-18 | SCALE : 1:60 (A1)
DRAWN BY : ASING | CHECKED BY : -

美特鋁質有限公司
MIDI ALUMINIUM FABRICATOR LTD.
Units 6-8, Sunray Industrial Centre, 1/F
610 Cha Kwo Ling Road, Kowloon
Tel:23489211-4 Fax:(852)27727666

DWG NO. : J837-CW-2506 | REV. : F

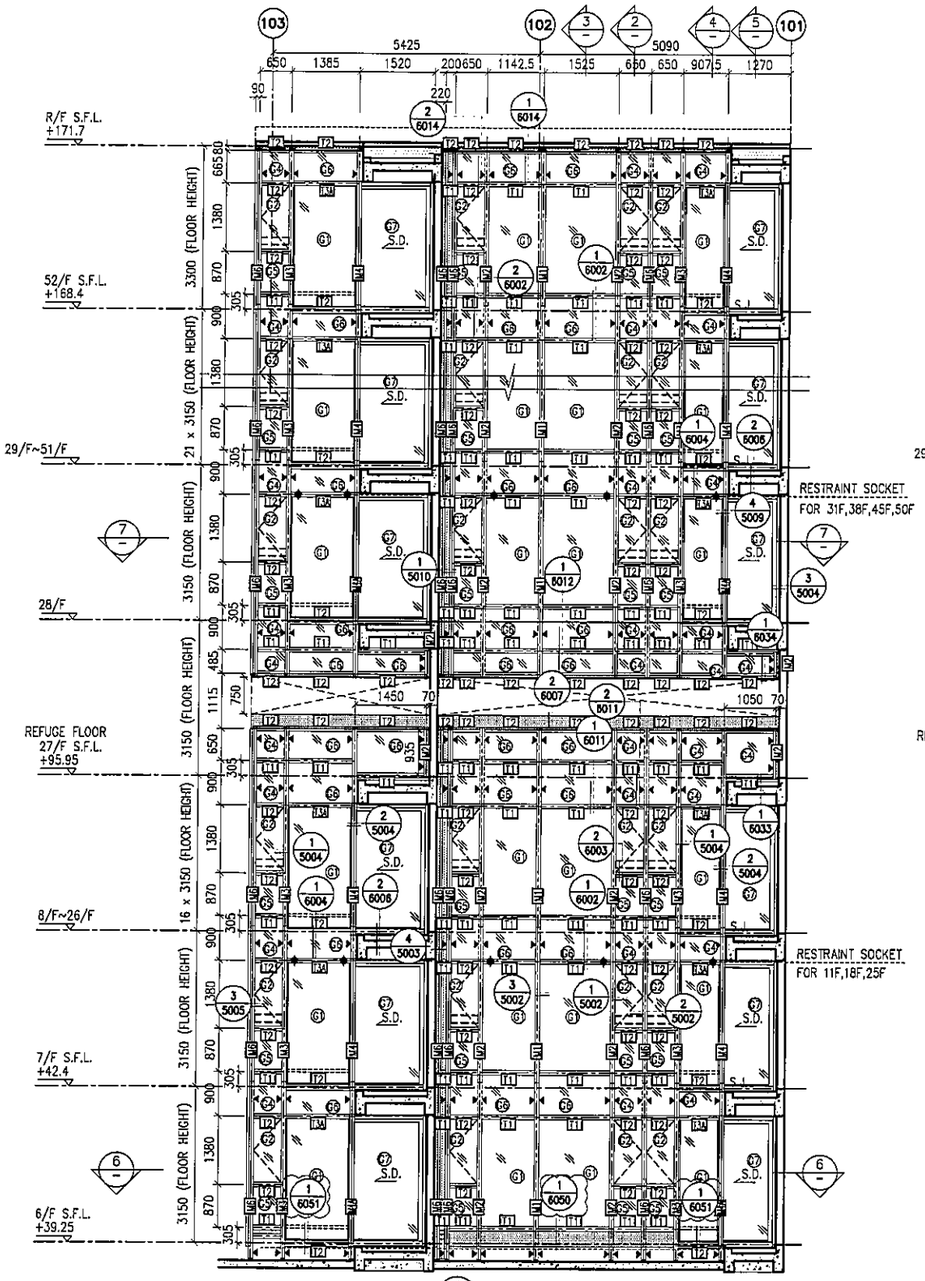

1 PART ELEVATION FOR CURTAIN WALL

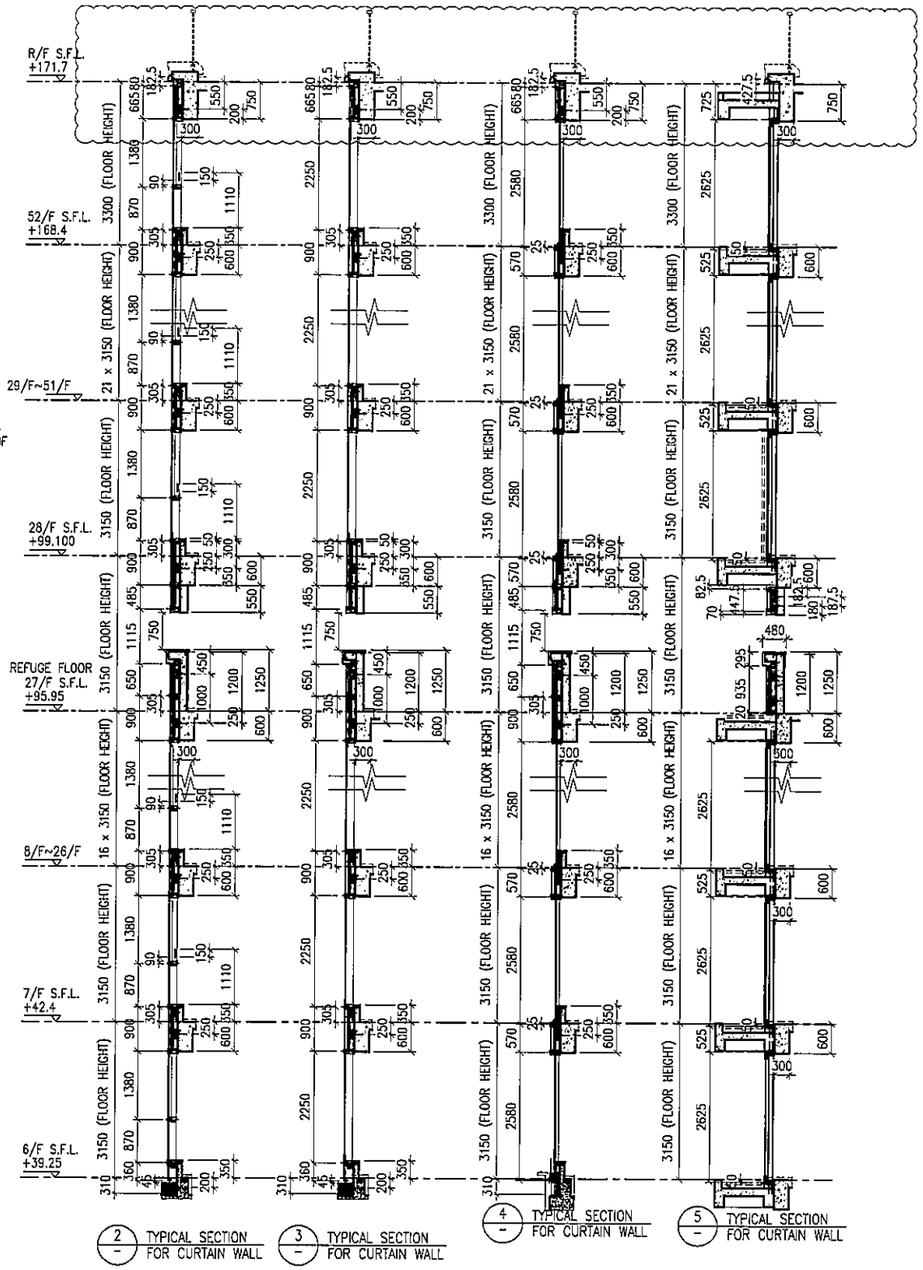

2 TYPICAL SECTION FOR CURTAIN WALL

3 TYPICAL SECTION FOR CURTAIN WALL

4 TYPICAL SECTION FOR CURTAIN WALL

5 TYPICAL SECTION FOR CURTAIN WALL

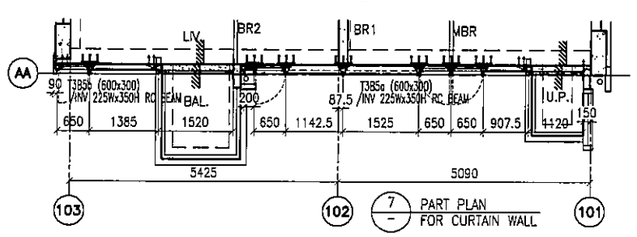

6 PART PLAN FOR CURTAIN WALL

7 PART PLAN FOR CURTAIN WALL

LEGEND:

- G1 – 10 mm THK. TEMPERED BLUE TINTED GLASS (OUTER) + 9 mm AIR SPACE + 8 mm THK. TEMPERED CLEAR GLASS (INNER)
- G2 – 8 mm THK. HEAT STRENGTHENED TINTED GLASS (OUTER)+ 9 mm AIR SPACE + 8 mm THK. HEAT STRENGTHENED CLEAR GLASS (INNER)
- G3 – 10 mm THK. HEAT STRENGTHENED BLUE TINTED GLASS (OUTER)+ 9 mm AIR SPACE + 8 mm THK. TEMPERED CLEAR GLASS (INNER)
- G4 – 8 mm THK. HEAT STRENGTHENED BLUE TINTED GLASS (SPANDREL GLASS)
- G5 – 8 mm THK. HEAT STRENGTHENED BLUE TINTED GLASS (OUTER)+ 9 mm AIR SPACE + 8 mm THK. TEMPERED CLEAR GLASS (INNER)
- G6 – 8 mm THK. TEMPERED BLUE TINTED GLASS (SPANDREL GLASS)
- G7 – 8 mm THK. HEAT STRENGTHENED TINTED GLASS (OUTER)+ 1.52PVB + 8 mm THK. HEAT STRENGTHENED CLEAR LAMINATED GLASS (INNER) 10 mm THK. TEMPERED GLASS (INTERNAL PROTECTIVE BARRIER)
- 3 mm THK. ALUM. CLADDING
- M.W. – MAINTENANCE WINDOW
- S.J. – STACK JOINT
- AE01 – ALUM. EXTRUSION DIE NO.
- ▲ – SUPPORT POINT
- ◆ – RESTRAINT SOCKET

B.O. REF :

CLIENT :
偉和置業有限公司
Sino Land Company Limited

ARCHITECT :
WONG TUNG & PARTNERS LIMITED
ARCHITECTS & PLANNERS

MAIN CONTRACTOR :
CR Construction Company Limited

STRUCTURAL ENGINEER :
AECOM

FACADE CONSULTANT:
AECOM

NOTE :
1. ALL DIMENSIONS ARE IN mm.
2. ALL ELEVATIONS ARE VIEWED FROM OUTSIDE.
3. ALL DIMENSIONS TO BE VERIFIED ON SITE BEFORE FABRICATION.

LEGEND :
- X1 — DETAIL MARK NO.
- X001 — REFER SHEET NO.

1. F.F.L. --FINISHED FLOOR LEVEL
2. S.F.L. --STRUCTURAL FLOOR LEVEL
3. (R) --REVERSED DETAIL

NO.	DATE	REVISED	BY
F	16/07/2019	GENERAL REVISED	
E	17/01/2019	GENERAL REVISED	
D	22/12/2018	GENERAL REVISED	
C	04/12/2018	GENERAL REVISED	
B	24/11/2018	GENERAL REVISED	
A	10/9/2018	GENERAL REVISED	

JOB NO. : J-837

PROJECT :
URA KWUN TONG TOWN CENTRE REDEVELOPMENT (AREA 2 & 3) AT NKIL 6514, KWUN TONG, KWLOON

TITLE :
PART ELEVATION OF CURTAIN WALL AT TOWER 3

DATE : 04-JUL-18 | SCALE : 1:60 (A1)

DRAWN BY : ASING | CHECKED BY : –

美特鋁質有限公司
MIDI ALUMINIUM FABRICATOR LTD.
Units 6-8, Sunray Industrial Centre, 1/F
610 Cha Kwo Ling Road, Kowloon
Tel:23489211-4 Fax:(852)27727666

DWG NO. : J837-CW-2308 | REV. : F

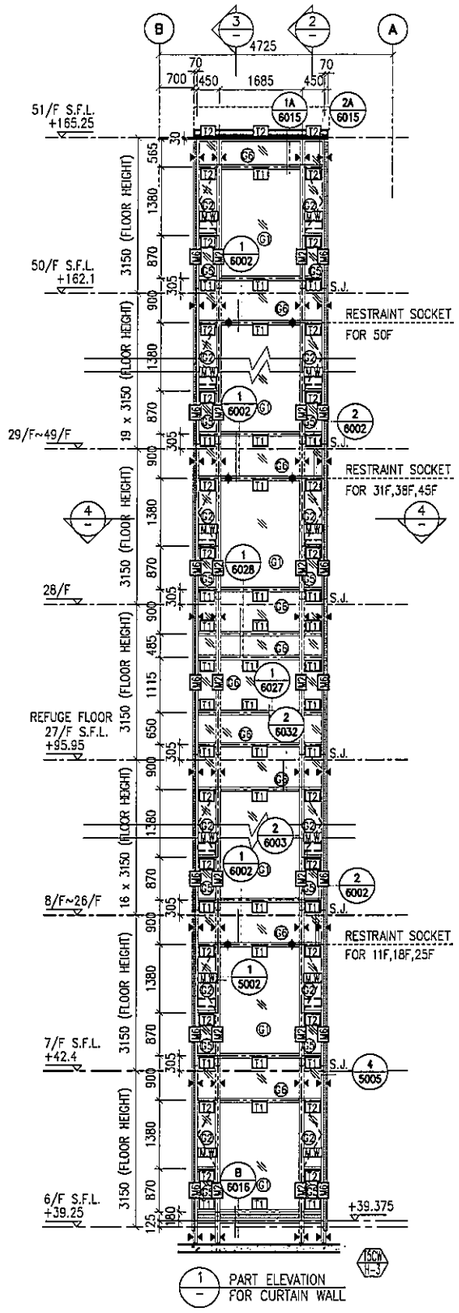

1 PART ELEVATION FOR CURTAIN WALL

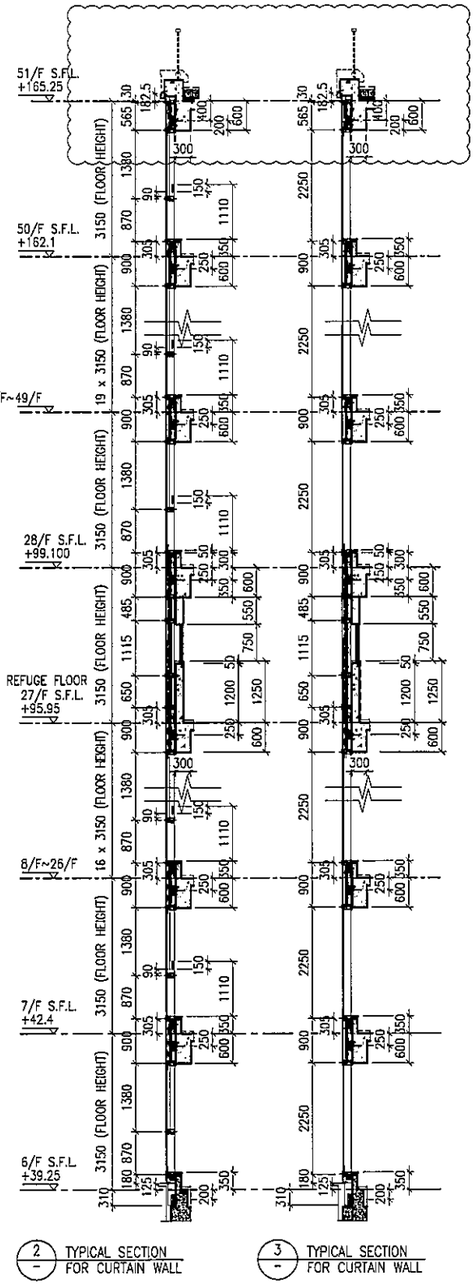

2 TYPICAL SECTION FOR CURTAIN WALL

3 TYPICAL SECTION FOR CURTAIN WALL

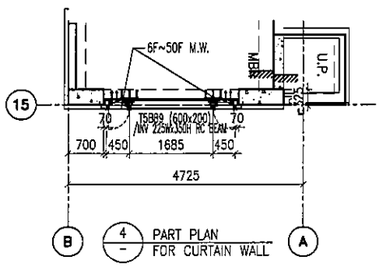

4 PART PLAN FOR CURTAIN WALL

LEGEND:

- 10 mm THK. TEMPERED BLUE TINTED GLASS (OUTER) + 9 mm AIR SPACE + 8 mm THK. TEMPERED CLEAR GLASS (INNER)
- 8 mm THK. HEAT STRENGTHENED TINTED GLASS (OUTER)+ 9 mm AIR SPACE + 8 mm THK. HEAT STRENGTHENED CLEAR GLASS (INNER)
- 10 mm THK. HEAT STRENGTHENED BLUE TINTED GLASS (OUTER)+ 9 mm AIR SPACE + 8 mm THK. TEMPERED CLEAR GLASS (INNER)
- 8 mm THK. HEAT STRENGTHENED BLUE TINTED GLASS (SPANDREL GLASS)
- 8 mm THK. HEAT STRENGTHENED BLUE TINTED GLASS (OUTER)+ 9 mm AIR SPACE + 8 mm THK. TEMPERED CLEAR GLASS (INNER)
- 8 mm THK. TEMPERED BLUE TINTED GLASS (SPANDREL GLASS)
- 8 mm THK. HEAT STRENGTHENED TINTED GLASS (OUTER)+ 1.52PVB + 8 mm THK. HEAT STRENGTHENED CLEAR LAMINATED GLASS (INNER) 10 mm THK. TEMPERED GLASS (INTERNAL PROTECTIVE BARRIER)
- 3 mm THK. ALUM. CLADDING
- M.W. – MAINTENANCE WINDOW
- S.J. – STACK JOINT
- AE-01 – ALUM. EXTRUSION DIE NO.
- ▲ – SUPPORT POINT
- ◆ – RESTRAINT SOCKET

B.D. REF :

CLIENT :
信和置業有限公司
Sino Land Company Limited

ARCHITECT : WONG TUNG & PARTNERS LIMITED ARCHITECTS & PLANNERS

MAIN CONTRACTOR :
CR Construction Company Limited

STRUCTURAL ENGINEER :
AECOM

FACADE CONSULTANT:
AECOM

NOTE :
1. ALL DIMENSIONS ARE IN mm.
2. ALL ELEVATIONS ARE VIEWED FROM OUTSIDE.
3. ALL DIMENSIONS TO BE VERIFIED ON SITE BEFORE FABRICATION.

LEGEND :
- X1 / X001 — DETAIL MARK NO. / REFER SHEET NO.
1. F.F.L. --FINISHED FLOOR LEVEL
2. S.F.L. --STRUCTURAL FLOOR LEVEL
3. /R --REVERSED DETAIL

NO.	DATE	REVISED	BY
F	16/07/2019	GENERAL REVISED	
E	17/01/2019	GENERAL REVISED	
D	22/12/2018	GENERAL REVISED	
C	04/12/2018	GENERAL REVISED	
B	24/11/2018	GENERAL REVISED	
A	10/9/2018	GENERAL REVISED	

JOB NO. : J-837

PROJECT :
URA KWUN TONG TOWN CENTRE REDEVELOPMENT (AREA 2 & 3) AT NKIL 6514, KWUN TONG, KWLOON

TITLE :
PART ELEVATION OF CURTAIN WALL AT TOWER 5

DATE : 04-JUL-18	SCALE : 1:60 (A1)
DRAWN BY : ASING	CHECKED BY : -

美特鋁質有限公司
MIDI ALUMINIUM FABRICATOR LTD.
Units 6-8, Sunray Industrial Centre, 1/F
610 Cha Kwo Ling Road, Kowloon
Tel:23489211-4 Fax:(852)27727666

DWG NO. : J837-CW-2507 REV. : F

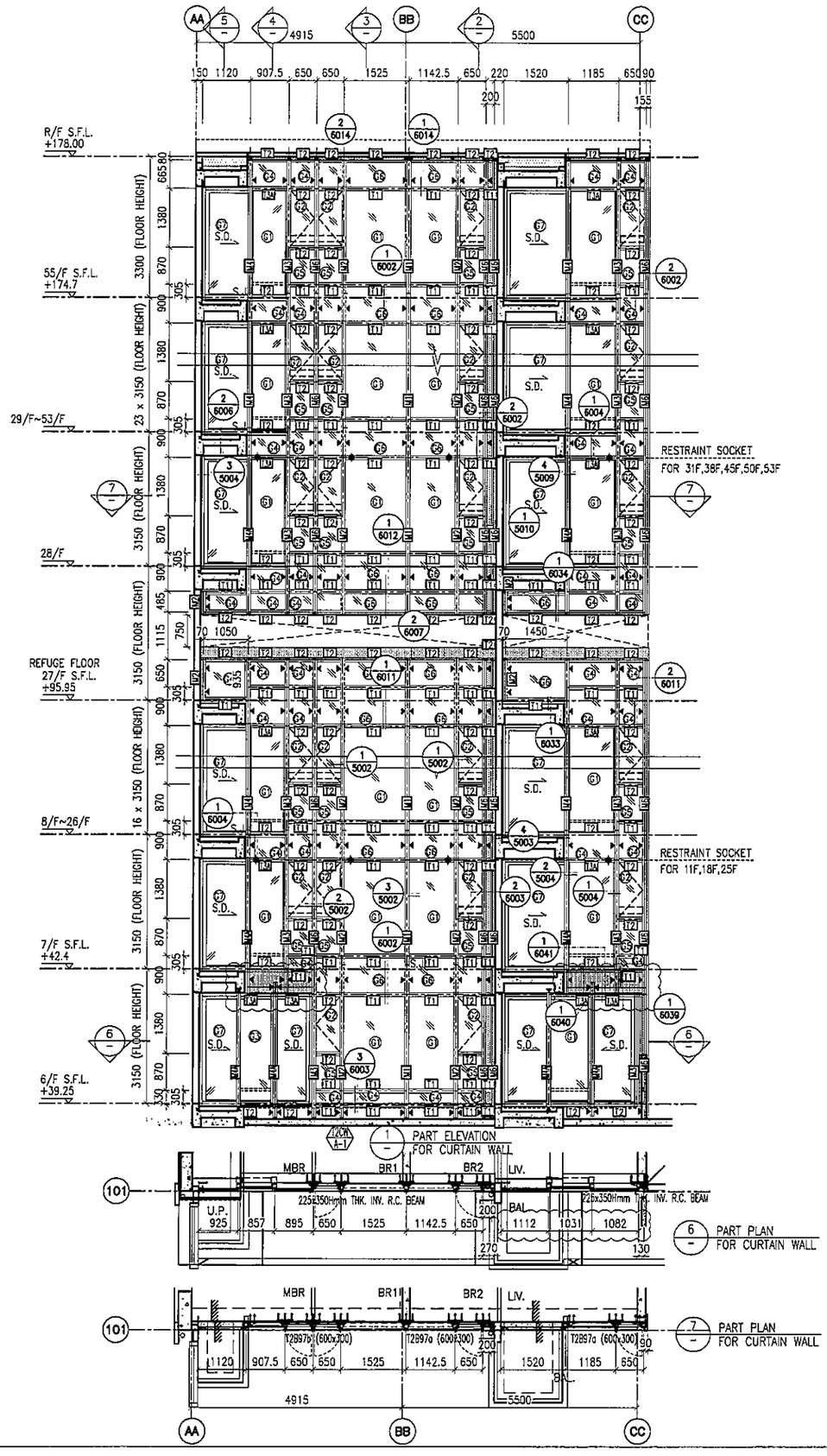

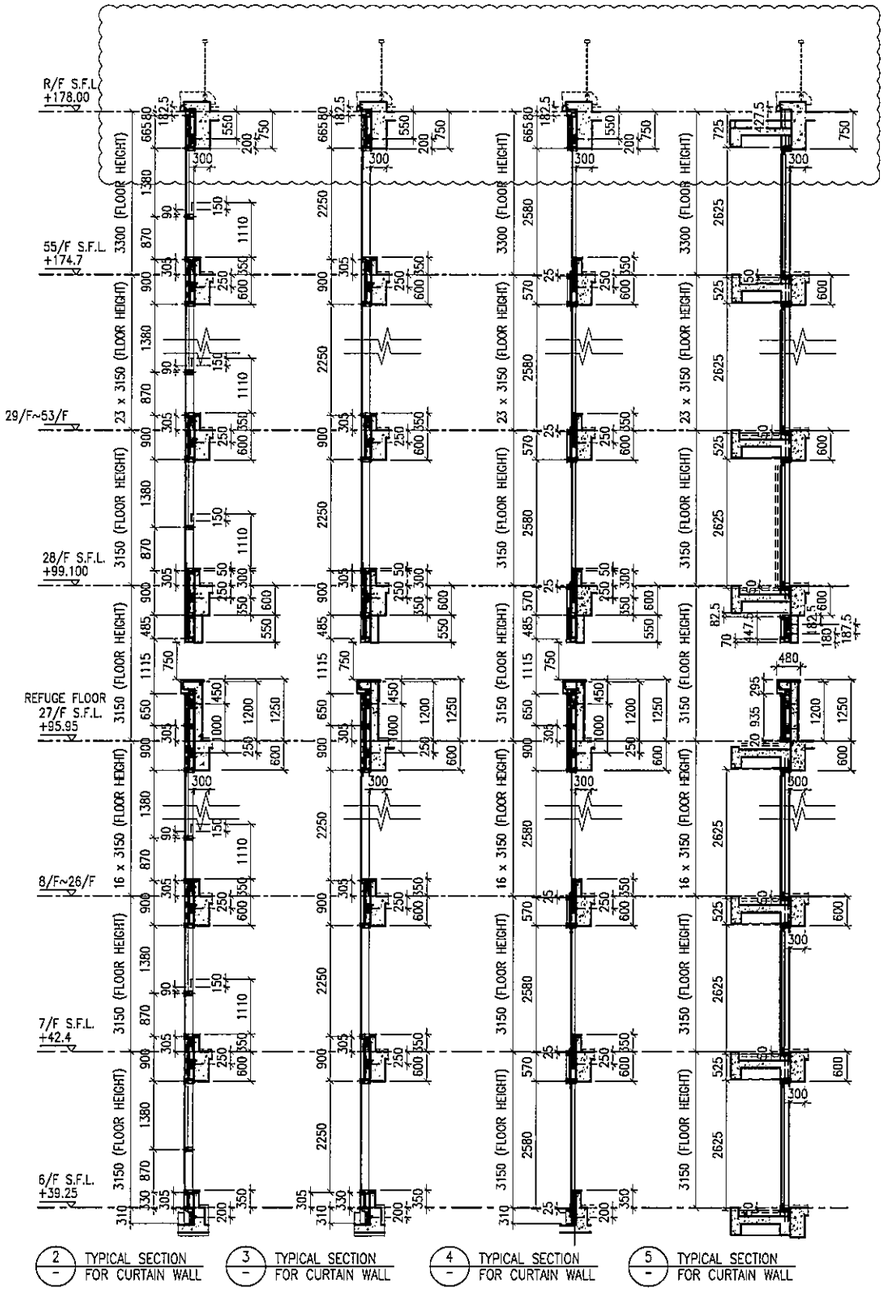

2 TYPICAL SECTION FOR CURTAIN WALL
3 TYPICAL SECTION FOR CURTAIN WALL
4 TYPICAL SECTION FOR CURTAIN WALL
5 TYPICAL SECTION FOR CURTAIN WALL

LEGEND:

- 10 mm THK. TEMPERED BLUE TINTED GLASS (OUTER) + 9 mm AIR SPACE + 8 mm THK. TEMPERED CLEAR GLASS (INNER)
- 8 mm THK. HEAT STRENGTHENED TINTED GLASS (OUTER)+ 9 mm AIR SPACE + 8 mm THK. HEAT STRENGTHENED CLEAR GLASS (INNER)
- 10 mm THK. HEAT STRENGTHENED BLUE TINTED GLASS (OUTER)+ 9 mm AIR SPACE + 8 mm THK. TEMPERED CLEAR GLASS (INNER)
- 8 mm THK. HEAT STRENGTHENED BLUE TINTED GLASS (SPANDREL GLASS)
- 8 mm THK. HEAT STRENGTHENED BLUE TINTED GLASS (OUTER)+ 9 mm AIR SPACE + 8 mm THK. TEMPERED CLEAR GLASS (INNER)
- 8 mm THK. TEMPERED BLUE TINTED GLASS (SPANDREL GLASS)
- 8 mm THK. HEAT STRENGTHENED TINTED GLASS (OUTER)+ 1.52PVB + 8 mm THK. HEAT STRENGTHENED CLEAR LAMINATED GLASS (INNER)
- 10 mm THK. TEMPERED GLASS (INTERNAL PROTECTIVE BARRIER)
- 3 mm THK. ALUM. CLADDING
- M.W. – MAINTENANCE WINDOW
- S.J. – STACK JOINT
- AE-01 – ALUM. EXTRUSION DIE NO.
- ▲ – SUPPORT POINT
- ◆ – RESTRAINT SOCKET

B.D. REF :

CLIENT :
信和置業有限公司
Sino Land Company Limited

ARCHITECT : WONG TUNG & PARTNERS LIMITED
ARCHITECTS & PLANNERS

MAIN CONTRACTOR :
CR Construction Company Limited

STRUCTURAL ENGINEER :
AECOM

FACADE CONSULTANT:
AECOM

NOTE :
1. ALL DIMENSIONS ARE IN mm.
2. ALL ELEVATIONS ARE VIEWED FROM OUTSIDE.
3. ALL DIMENSIONS TO BE VERIFIED ON SITE BEFORE FABRICATION.

LEGEND :
X1 / XC01 – DETAIL MARK NO. / REFER SHEET NO.
1. F.F.L. --FINISHED FLOOR LEVEL
2. S.F.L. --STRUCTURAL FLOOR LEVEL
3. (R) --REVERSED DETAIL

NO.	DATE	REVISED	BY
G	16/07/2019	GENERAL REVISED	
F	26/05/2019	GENERAL REVISED	
E	17/01/2019	GENERAL REVISED	
D	22/12/2018	GENERAL REVISED	
C	04/12/2018	GENERAL REVISED	
B	24/11/2018	GENERAL REVISED	
A	10/9/2018	GENERAL REVISED	

JOB NO. : J-837

PROJECT :
URA KWUN TONG TOWN CENTRE REDEVELOPMENT (AREA 2 & 3) AT NKIL 6514, KWUN TONG, KWLOON

TITLE :
PART ELEVATION OF CURTAIN WALL AT TOWER 2

DATE : 04-JUL-18 | SCALE : 1:60 (A1)
DRAWN BY : ASING | CHECKED BY : –

美特鋁質有限公司
MIDI ALUMINIUM FABRICATOR LTD.
Units 6-8, Sunray Industrial Centre, 1/F
610 Cha Kwo Ling Road, Kowloon
Tel:23489211-4 Fax:(852)27727666

DWG NO. : J837-CW-2208 | REV. : G

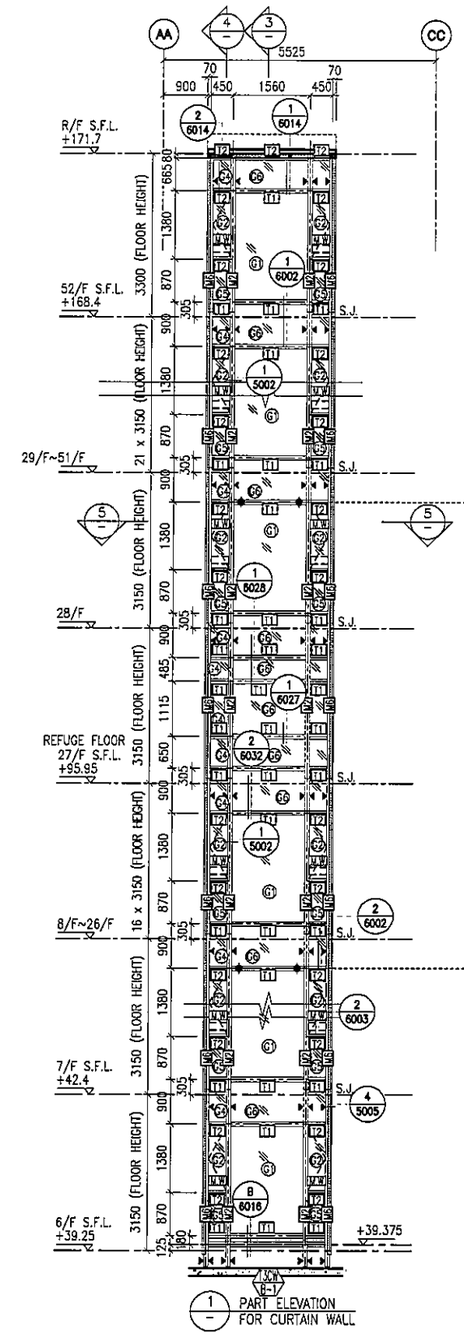

1 / – PART ELEVATION FOR CURTAIN WALL

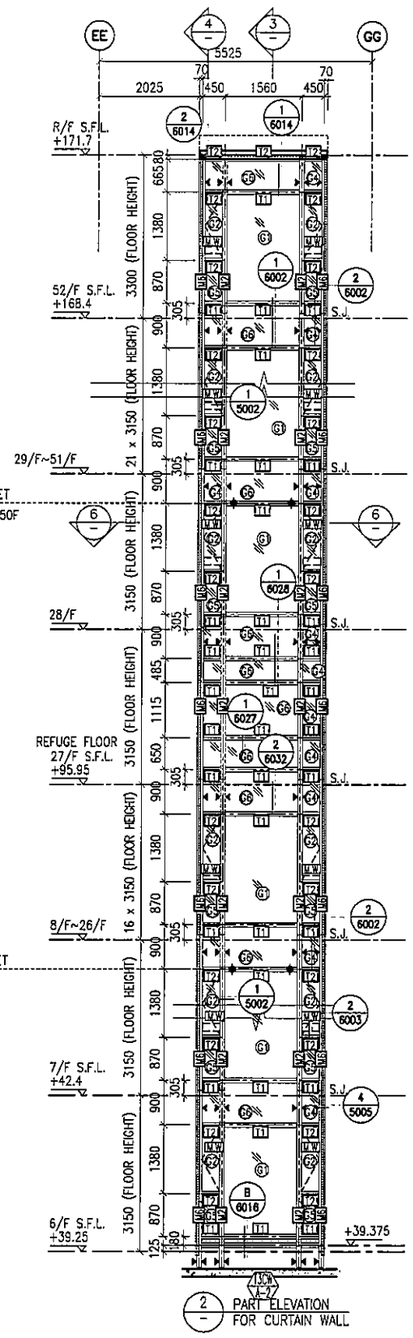

2 / – PART ELEVATION FOR CURTAIN WALL

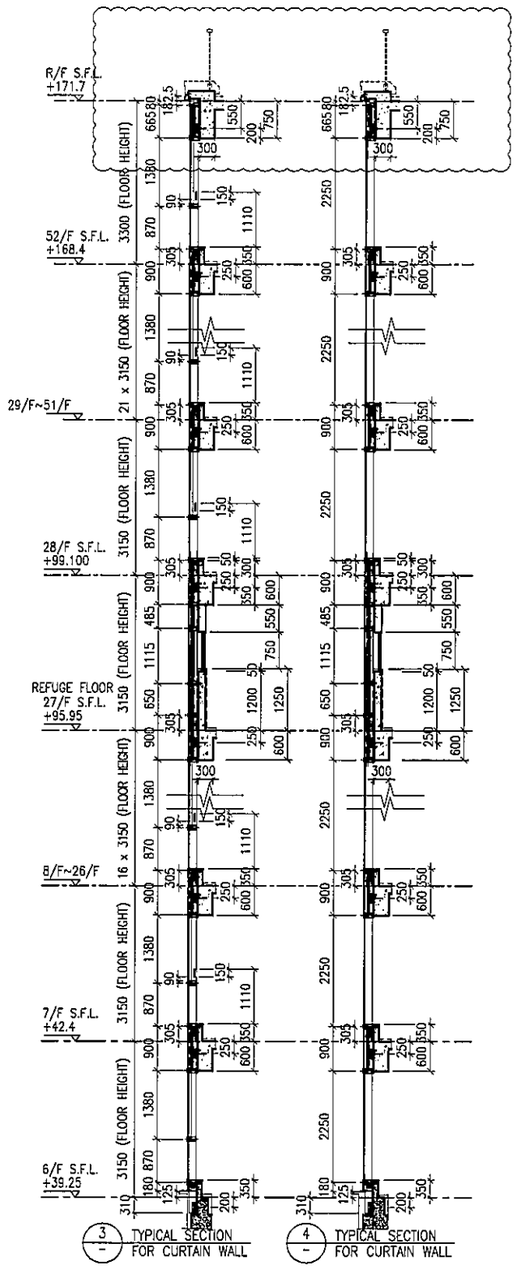

3 / – TYPICAL SECTION FOR CURTAIN WALL

4 / – TYPICAL SECTION FOR CURTAIN WALL

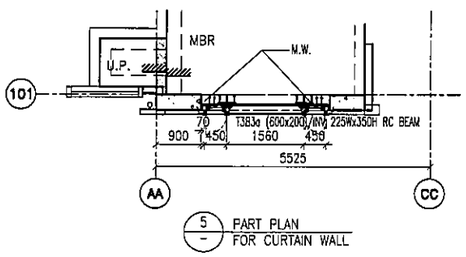

5 / – PART PLAN FOR CURTAIN WALL

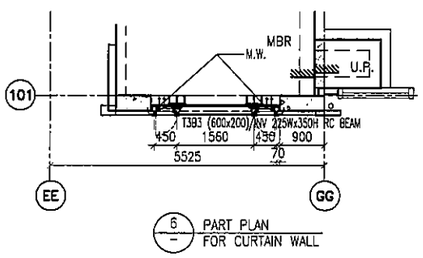

6 / – PART PLAN FOR CURTAIN WALL

LEGEND:

- G1+ – 10 mm THK. TEMPERED BLUE TINTED GLASS (OUTER) + 9 mm AIR SPACE + 8 mm THK. TEMPERED CLEAR GLASS (INNER)
- G2+ – 8 mm THK. HEAT STRENGTHENED TINTED GLASS (OUTER)+ 9 mm AIR SPACE + 8 mm THK. HEAT STRENGTHENED CLEAR GLASS (INNER)
- G3+ – 10 mm THK. HEAT STRENGTHENED BLUE TINTED GLASS (OUTER)+ 9 mm AIR SPACE + 8 mm THK. TEMPERED CLEAR GLASS (INNER)
- G4+ – 8 mm THK. HEAT STRENGTHENED BLUE TINTED GLASS (SPANDREL GLASS)
- G5+ – 8 mm THK. HEAT STRENGTHENED BLUE TINTED GLASS (OUTER)+ 9 mm AIR SPACE + 8 mm THK. TEMPERED CLEAR GLASS (INNER)
- G6+ – 8 mm THK. TEMPERED BLUE TINTED GLASS (SPANDREL GLASS)
- G7+ – 8 mm THK. HEAT STRENGTHENED TINTED GLASS (OUTER)+ 1.52PVB + 8 mm THK. HEAT STRENGTHENED CLEAR LAMINATED GLASS (INNER) 10 mm THK. TEMPERED GLASS (INTERNAL PROTECTIVE BARRIER)
- 3 mm THK. ALUM. CLADDING
- M.W. – MAINTENANCE WINDOW
- S.J. – STACK JOINT
- AE01 – ALUM. EXTRUSION DIE NO.
- ▲ – SUPPORT POINT
- ◆ – RESTRAINT SOCKET

B.D. REF :

CLIENT :
信和置業有限公司
Sino Land Company Limited

ARCHITECT :
WONG TUNG & PARTNERS LIMITED
ARCHITECTS & PLANNERS

MAIN CONTRACTOR :
CR Construction Company Limited

STRUCTURAL ENGINEER :
AECOM

FACADE CONSULTANT:
AECOM

NOTE :
1. ALL DIMENSIONS ARE IN mm.
2. ALL ELEVATIONS ARE VIEWED FROM OUTSIDE.
3. ALL DIMENSIONS TO BE VERIFIED ON SITE BEFORE FABRICATION.

LEGEND :
- X1 / X001 — DETAIL MARK NO. / REFER SHEET NO.
1. F.F.L. --FINISHED FLOOR LEVEL
2. S.F.L. --STRUCTURAL FLOOR LEVEL
3. /R --REVERSED DETAIL

NO.	DATE	REVISED	BY
F	16/07/2019	GENERAL REVISED	
E	17/01/2019	GENERAL REVISED	
D	22/12/2018	GENERAL REVISED	
C	04/12/2018	GENERAL REVISED	
B	24/11/2018	GENERAL REVISED	
A	10/9/2018	GENERAL REVISED	

JOB NO. : J-837

PROJECT :
URA KWUN TONG TOWN CENTRE REDEVELOPMENT (AREA 2 & 3) AT NKIL 6514, KWUN TONG, KWLOON

TITLE :
PART ELEVATION OF CURTAIN WALL AT TOWER 3

DATE : 04-JUL-18 | SCALE : 1:60 (A1)

DRAWN BY : ASING | CHECKED BY : –

美特鋁質有限公司
MIDI ALUMINIUM FABRICATOR LTD.
Units 6-8, Sunray Industrial Centre, 1/F
610 Cha Kwo Ling Road, Kowloon
Tel:23489211-4 Fax:(852)27727666

DWG NO. : J837-CW-2309 | REV. : F

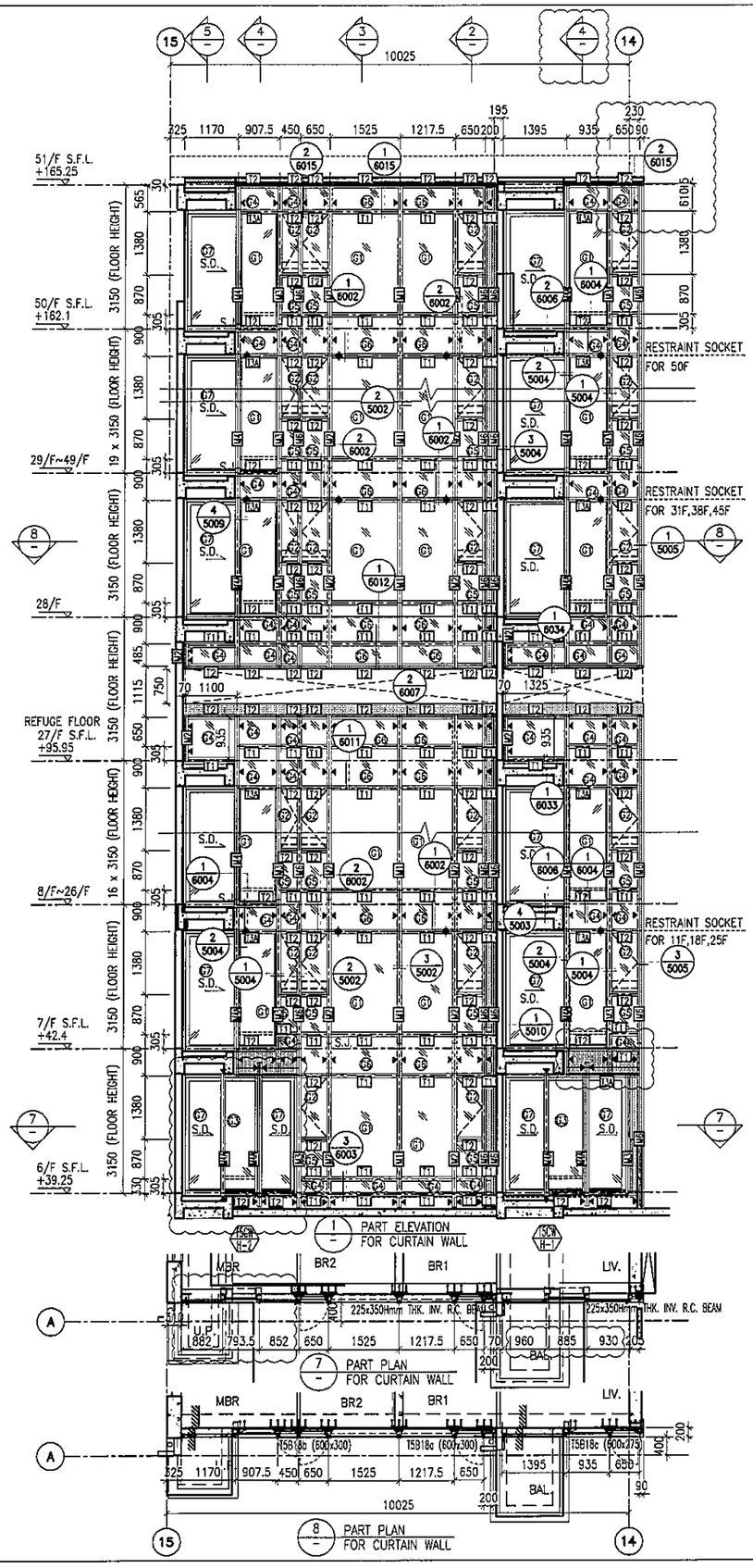

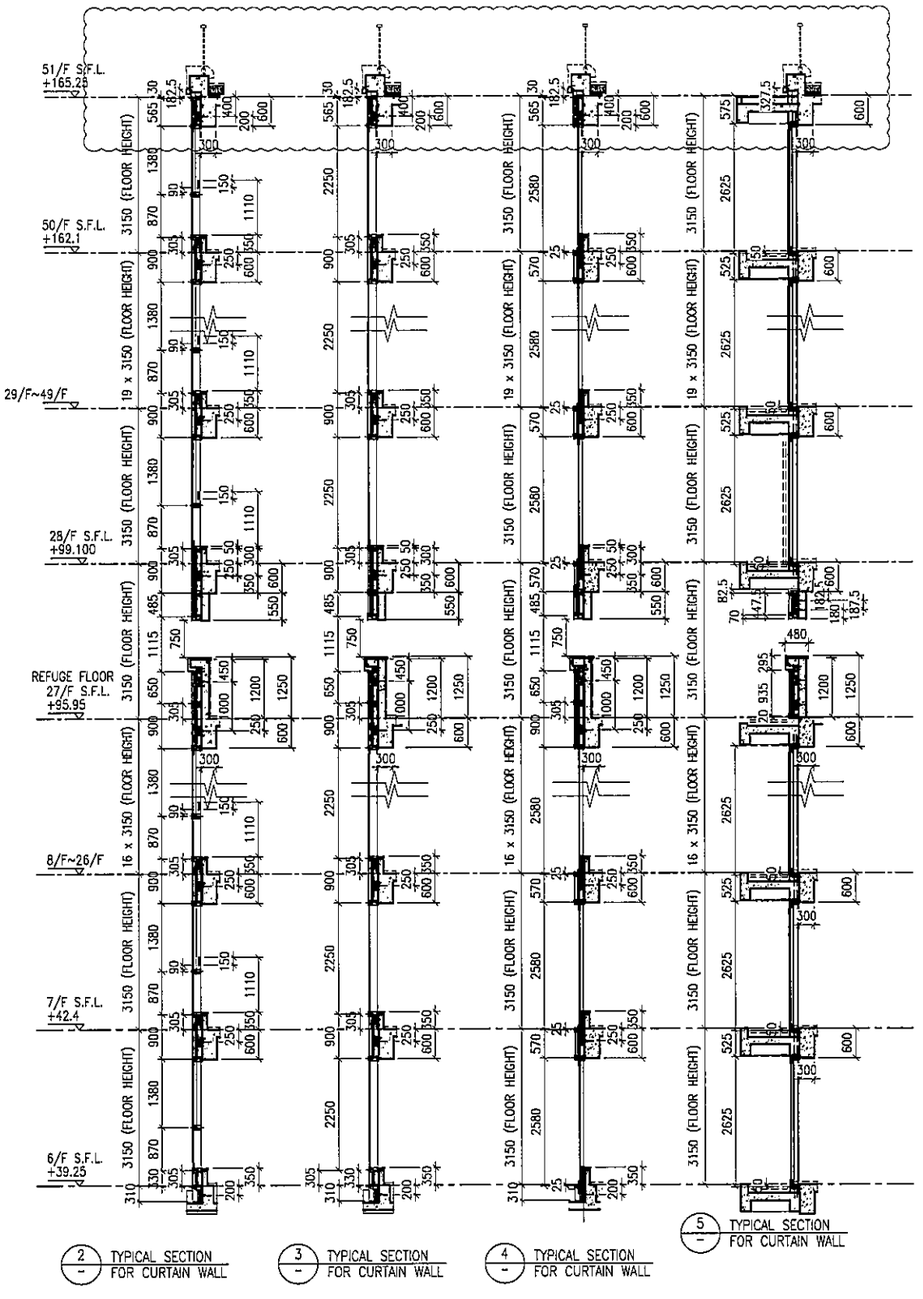

2 TYPICAL SECTION FOR CURTAIN WALL

3 TYPICAL SECTION FOR CURTAIN WALL

4 TYPICAL SECTION FOR CURTAIN WALL

5 TYPICAL SECTION FOR CURTAIN WALL

LEGEND:

- 10 mm THK. TEMPERED BLUE TINTED GLASS (OUTER) + 9 mm AIR SPACE + 8 mm THK. TEMPERED CLEAR GLASS (INNER)
- 8 mm THK. HEAT STRENGTHENED TINTED GLASS (OUTER)+ 9 mm AIR SPACE + 8 mm THK. HEAT STRENGTHENED CLEAR GLASS (INNER)
- 10 mm THK. HEAT STRENGTHENED BLUE TINTED GLASS (OUTER)+ 9 mm AIR SPACE + 8 mm THK. TEMPERED CLEAR GLASS (INNER)
- 8 mm THK. HEAT STRENGTHENED BLUE TINTED GLASS (SPANDREL GLASS)
- 8 mm THK. HEAT STRENGTHENED BLUE TINTED GLASS (OUTER)+ 9 mm AIR SPACE + 8 mm THK. TEMPERED CLEAR GLASS (INNER)
- 8 mm THK. TEMPERED BLUE TINTED GLASS (SPANDREL GLASS)
- 8 mm THK. HEAT STRENGTHENED TINTED GLASS (OUTER)+ 1.52PVB + 8 mm THK. HEAT STRENGTHENED CLEAR LAMINATED GLASS (INNER) 10 mm THK. TEMPERED GLASS (INTERNAL PROTECTIVE BARRIER)
- 3 mm THK. ALUM. CLADDING
- M.W. – MAINTENANCE WINDOW
- S.J. – STACK JOINT
- AE01 – ALUM. EXTRUSION DIE NO.
- ▲ – SUPPORT POINT
- ◆ – RESTRAINT SOCKET

B.D. REF :

CLIENT :
信和置業有限公司
Sino Land Company Limited

ARCHITECT :
WONG TUNG & PARTNERS LIMITED
ARCHITECTS & PLANNERS

MAIN CONTRACTOR :
CR Construction Company Limited

STRUCTURAL ENGINEER :
AECOM

FACADE CONSULTANT:
AECOM

NOTE :
1. ALL DIMENSIONS ARE IN mm.
2. ALL ELEVATIONS ARE VIEWED FROM OUTSIDE.
3. ALL DIMENSIONS TO BE VERIFIED ON SITE BEFORE FABRICATION.

LEGEND :
X1 / X001 – DETAIL MARK NO. / REFER SHEET NO.
1. F.F.L. --FINISHED FLOOR LEVEL
2. S.F.L. --STRUCTURAL FLOOR LEVEL
3. /R --REVERSED DETAIL

NO.	DATE	REVISED	BY
G	16/07/2019	GENERAL REVISED	
F	26/05/2019	GENERAL REVISED	
E	17/01/2019	GENERAL REVISED	
D	22/12/2018	GENERAL REVISED	
C	04/12/2018	GENERAL REVISED	
B	24/11/2018	GENERAL REVISED	
A	10/9/2018	GENERAL REVISED	

JOB NO. : J-837

PROJECT :
URA KWUN TONG TOWN CENTRE REDEVELOPMENT (AREA 2 & 3) AT NKIL 6514, KWUN TONG, KWLOON

TITLE :
PART ELEVATION OF CURTAIN WALL AT TOWER 5

DATE : 04-JUL-18 | SCALE : 1:60 (A1)

DRAWN BY : ASING | CHECKED BY : –

美特鋁質有限公司
MIDI ALUMINIUM FABRICATOR LTD.
Units 6-8, Sunray Industrial Centre, 1/F
610 Cha Kwo Ling Road, Kowloon
Tel:23489211-4 Fax:(852)27727666

DWG NO. : J837-CW-2508 | REV. : G

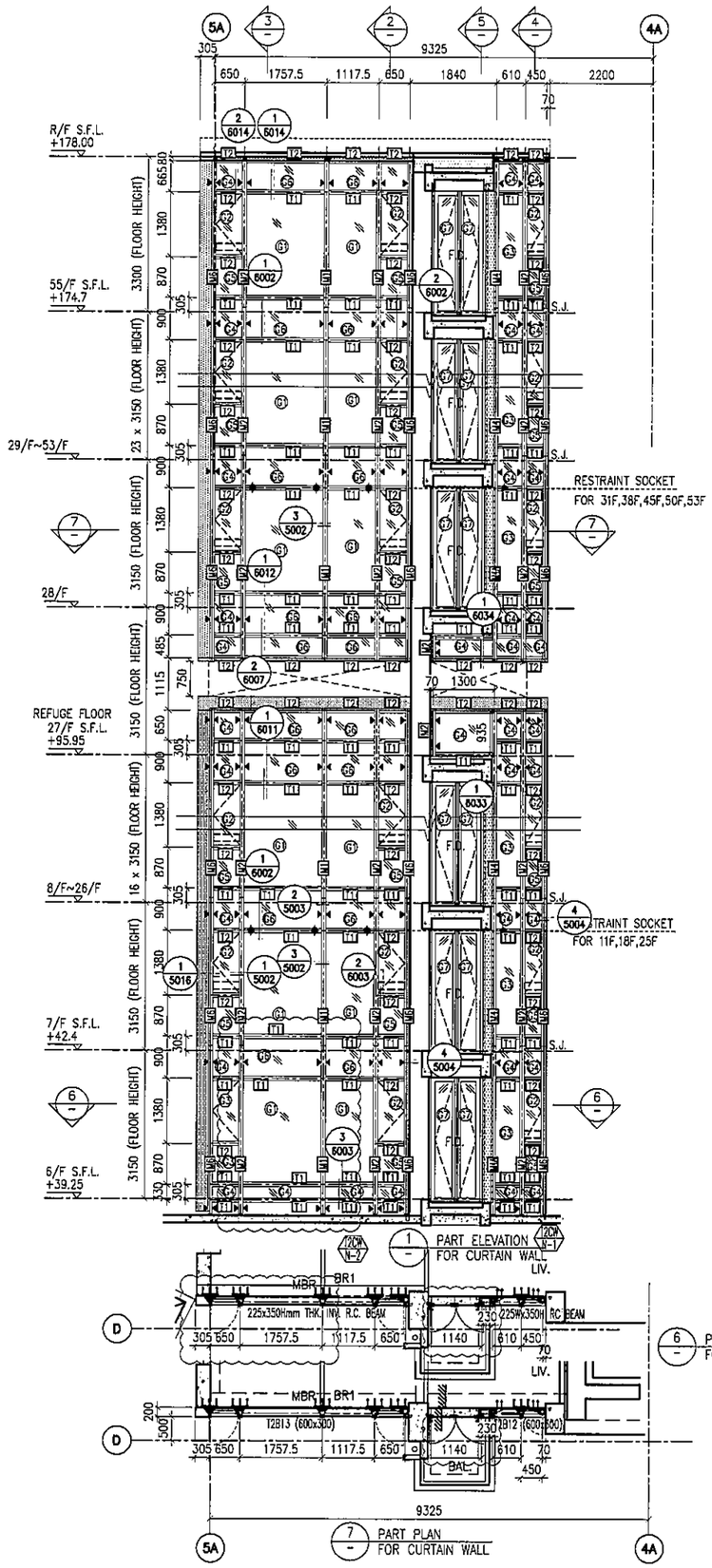

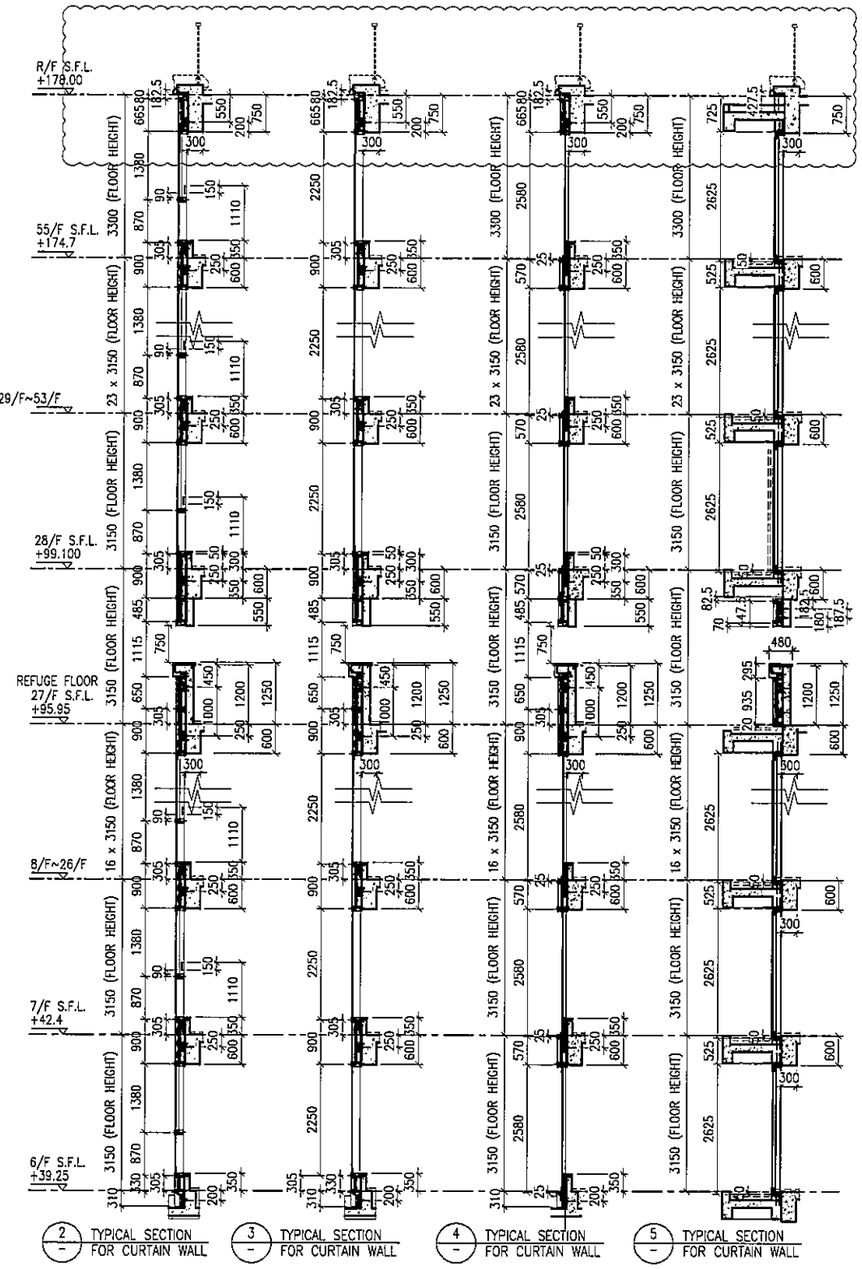

LEGEND:

- G1+ – 10 mm THK. TEMPERED BLUE TINTED GLASS (OUTER) + 9 mm AIR SPACE + 8 mm THK. TEMPERED CLEAR GLASS (INNER)
- G2+ – 8 mm THK. HEAT STRENGTHENED TINTED GLASS (OUTER)+ 9 mm AIR SPACE + 8 mm THK. HEAT STRENGTHENED CLEAR GLASS (INNER)
- G3+ – 10 mm THK. HEAT STRENGTHENED BLUE TINTED GLASS (OUTER)+ 9 mm AIR SPACE + 8 mm THK. TEMPERED CLEAR GLASS (INNER)
- G4+ – 8 mm THK. HEAT STRENGTHENED BLUE TINTED GLASS (SPANDREL GLASS)
- G5+ – 8 mm THK. HEAT STRENGTHENED BLUE TINTED GLASS (OUTER)+ 9 mm AIR SPACE + 8 mm THK. TEMPERED CLEAR GLASS (INNER)
- G6+ – 8 mm THK. TEMPERED BLUE TINTED GLASS (SPANDREL GLASS)
- G7+ – 8 mm THK. HEAT STRENGTHENED TINTED GLASS (OUTER)+ 1.52PVB + 8 mm THK. HEAT STRENGTHENED CLEAR LAMINATED GLASS (INNER) 10 mm THK. TEMPERED GLASS (INTERNAL PROTECTIVE BARRIER)
- 3 mm THK. ALUM. CLADDING
- M.W. – MAINTENANCE WINDOW
- S.J. – STACK JOINT
- AE01 – ALUM. EXTRUSION DIE NO.
- ▲ – SUPPORT POINT
- ✦ – RESTRAINT SOCKET

B.D. REF :

CLIENT :
信和置業有限公司
Sino Land Company Limited

ARCHITECT :
WONG TUNG & PARTNERS LIMITED
ARCHITECTS & PLANNERS

MAIN CONTRACTOR :
CR Construction Company Limited

STRUCTURAL ENGINEER :
AECOM

FACADE CONSULTANT:
AECOM

NOTE :
1. ALL DIMENSIONS ARE IN mm.
2. ALL ELEVATIONS ARE VIEWED FROM OUTSIDE.
3. ALL DIMENSIONS TO BE VERIFIED ON SITE BEFORE FABRICATION.

LEGEND :
X1 / X001 – DETAIL MARK NO. / REFER SHEET NO.
1. F.F.L. --FINISHED FLOOR LEVEL
2. S.F.L. --STRUCTURAL FLOOR LEVEL
3. /R – REVERSED DETAIL

NO.	DATE	REVISED	BY
F	16/07/2019	GENERAL REVISED	
E	17/01/2019	GENERAL REVISED	
D	22/12/2018	GENERAL REVISED	
C	04/12/2018	GENERAL REVISED	
B	24/11/2018	GENERAL REVISED	
A	10/9/2018	GENERAL REVISED	

JOB NO. : J-837

PROJECT :
URA KWUN TONG TOWN CENTRE REDEVELOPMENT (AREA 2 & 3) AT NKIL 6514, KWUN TONG, KWLOON

TITLE :
PART ELEVATION OF CURTAIN WALL AT TOWER 2

DATE : 04-JUL-18 | SCALE : 1:60 (A1)

DRAWN BY : ASING | CHECKED BY : -

美特鋁質有限公司
MIDI ALUMINIUM FABRICATOR LTD.
Units 6-8, Sunray Industrial Centre, 1/F
610 Cha Kwo Ling Road, Kowloon
Tel:23489211-4 Fax:(852)27727666

DWG NO. : J837-CW-2209 | REV. : F

B.D. REF :

CLIENT :
信和置業有限公司
Sino Land Company Limited

ARCHITECT :
WONG TUNG & PARTNERS LIMITED
ARCHITECTS & PLANNERS

MAIN CONTRACTOR :
CR Construction Company Limited

STRUCTURAL ENGINEER :
AECOM

FACADE CONSULTANT:
AECOM

NOTE :
1. ALL DIMENSIONS ARE IN mm.
2. ALL ELEVATIONS ARE VIEWED FROM OUTSIDE.
3. ALL DIMENSIONS TO BE VERIFIED ON SITE BEFORE FABRICATION.

LEGEND :
- X1 / X001 — DETAIL MARK NO. / REFER SHEET NO.
1. F.F.L. --FINISHED FLOOR LEVEL
2. S.F.L. --STRUCTURAL FLOOR LEVEL
3. /R --REVERSED DETAIL

NO.	DATE	REVISED	BY
G	16/07/2019	GENERAL REVISED	
F	26/05/2019	GENERAL REVISED	
E	17/01/2019	GENERAL REVISED	
D	22/12/2018	GENERAL REVISED	
C	04/12/2018	GENERAL REVISED	
B	24/11/2018	GENERAL REVISED	
A	10/9/2018	GENERAL REVISED	

LEGEND:
- 10 mm THK. TEMPERED BLUE TINTED GLASS (OUTER) + 9 mm AIR SPACE + 8 mm THK. TEMPERED CLEAR GLASS (INNER)
- 8 mm THK. HEAT STRENGTHENED TINTED GLASS (OUTER)+ 9 mm AIR SPACE + 8 mm THK. HEAT STRENGTHENED CLEAR GLASS (INNER)
- 10 mm THK. HEAT STRENGTHENED BLUE TINTED GLASS (OUTER)+ 9 mm AIR SPACE + 8 mm THK. TEMPERED CLEAR GLASS (INNER)
- 8 mm THK. HEAT STRENGTHENED BLUE TINTED GLASS (SPANDREL GLASS)
- 8 mm THK. HEAT STRENGTHENED BLUE TINTED GLASS (OUTER)+ 9 mm AIR SPACE + 8 mm THK. TEMPERED CLEAR GLASS (INNER)
- 8 mm THK. TEMPERED BLUE TINTED GLASS (SPANDREL GLASS)
- 8 mm THK. HEAT STRENGTHENED TINTED GLASS (OUTER)+ 1.52PVB + 8 mm THK. HEAT STRENGTHENED CLEAR LAMINATED GLASS (INNER)
- 10 mm THK. TEMPERED GLASS (INTERNAL PROTECTIVE BARRIER)
- 3 mm THK. ALUM. CLADDING
- M.W. — MAINTENANCE WINDOW
- S.J. — STACK JOINT
- AE-01 — ALUM. EXTRUSION DIE NO.
- ▲ — SUPPORT POINT
- ◆ — RESTRAINT SOCKET

JOB NO. : J-837

PROJECT :
URA KWUN TONG TOWN CENTRE REDEVELOPMENT (AREA 2 & 3) AT NKIL 6514, KWUN TONG, KWLOON

TITLE :
PART ELEVATION OF CURTAIN WALL AT TOWER 5

DATE : 04-JUL-18	SCALE : 1:60 (A1)
DRAWN BY : ASING	CHECKED BY : -

美特鋁質有限公司
MIDI ALUMINIUM FABRICATOR LTD.
Units 6-8, Sunray Industrial Centre, 1/F
610 Cha Kwo Ling Road, Kowloon
Tel:23489211-4 Fax:(852)27727666

DWG NO. : J837-CW-2509 | REV. : G

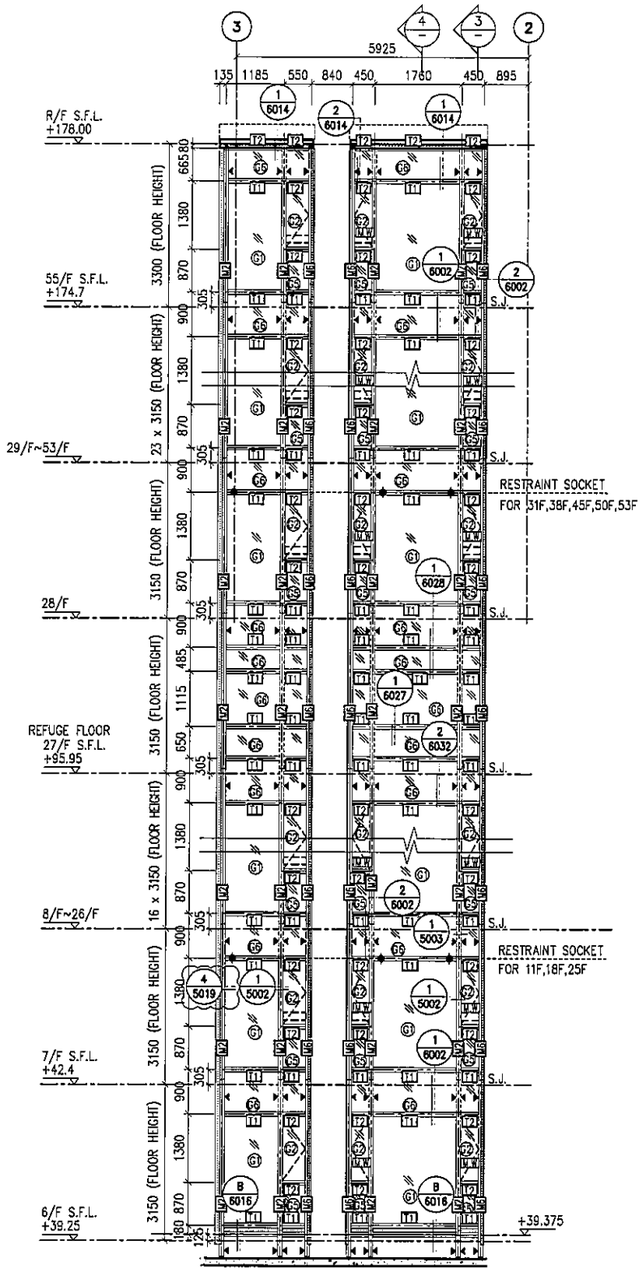

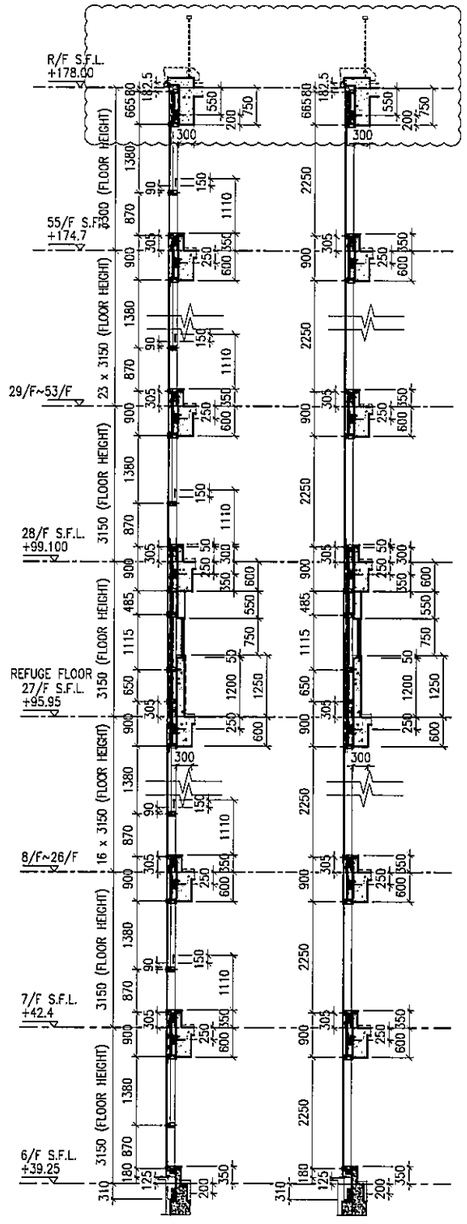

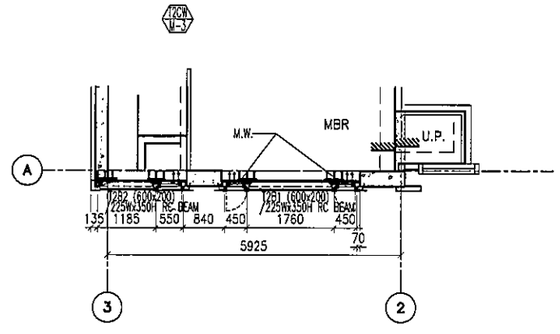

LEGEND:

- 10 mm THK. TEMPERED BLUE TINTED GLASS (OUTER) + 9 mm AIR SPACE + 8 mm THK. TEMPERED CLEAR GLASS (INNER)
- 8 mm THK. HEAT STRENGTHENED TINTED GLASS (OUTER)+ 9 mm AIR SPACE + 8 mm THK. HEAT STRENGTHENED CLEAR GLASS (INNER)
- 10 mm THK. HEAT STRENGTHENED BLUE TINTED GLASS (OUTER)+ 9 mm AIR SPACE + 8 mm THK. TEMPERED CLEAR GLASS (INNER)
- 8 mm THK. HEAT STRENGTHENED BLUE TINTED GLASS (SPANDREL GLASS)
- 8 mm THK. HEAT STRENGTHENED BLUE TINTED GLASS (OUTER)+ 9 mm AIR SPACE + 8 mm THK. TEMPERED CLEAR GLASS (INNER)
- 8 mm THK. TEMPERED BLUE TINTED GLASS (SPANDREL GLASS)
- 8 mm THK. HEAT STRENGTHENED TINTED GLASS (OUTER)+ 1.52PVB + 8 mm THK. HEAT STRENGTHENED CLEAR LAMINATED GLASS (INNER) 10 mm THK. TEMPERED GLASS (INTERNAL PROTECTIVE BARRIER)
- 3 mm THK. ALUM. CLADDING
- M.W. – MAINTENANCE WINDOW
- S.J. – STACK JOINT
- AE01 – ALUM. EXTRUSION DIE NO.
- ▲ – SUPPORT POINT
- ◆ – RESTRAINT SOCKET

B.D. REF :

CLIENT :
信和置業有限公司
Sino Land Company Limited

ARCHITECT :
WONG TUNG & PARTNERS LIMITED
ARCHITECTS & PLANNERS

MAIN CONTRACTOR :
CR Construction Company Limited

STRUCTURAL ENGINEER :
AECOM

FACADE CONSULTANT:
AECOM

NOTE :
1. ALL DIMENSIONS ARE IN mm.
2. ALL ELEVATIONS ARE VIEWED FROM OUTSIDE.
3. ALL DIMENSIONS TO BE VERIFIED ON SITE BEFORE FABRICATION.

LEGEND :
(X1 / XDD1) — DETAIL MARK NO. / REFER SHEET NO.
1. F.F.L. --FINISHED FLOOR LEVEL
2. S.F.L. --STRUCTURAL FLOOR LEVEL
3. (/R) --REVERSED DETAIL

NO.	DATE	REVISED	BY
F	16/07/2019	GENERAL REVISED	
E	17/01/2019	GENERAL REVISED	
D	22/12/2018	GENERAL REVISED	
C	04/12/2018	GENERAL REVISED	
B	24/11/2018	GENERAL REVISED	
A	10/9/2018	GENERAL REVISED	

JOB NO. : J-837

PROJECT :
URA KWUN TONG TOWN CENTRE REDEVELOPMENT (AREA 2 & 3) AT NKIL 6514, KWUN TONG, KWLOON

TITLE :
PART ELEVATION OF CURTAIN WALL AT TOWER 2

DATE : 04-JUL-18 | SCALE : 1:60 (A1)

DRAWN BY : ASING | CHECKED BY : -

美特鋁質有限公司
MIDI ALUMINIUM FABRICATOR LTD.
Units 6-8, Sunray Industrial Centre, 1/F
610 Cha Kwo Ling Road, Kowloon
Tel:23489211-4 Fax:(852)27727666

DWG NO. : J837-CW-2210 | REV. : F

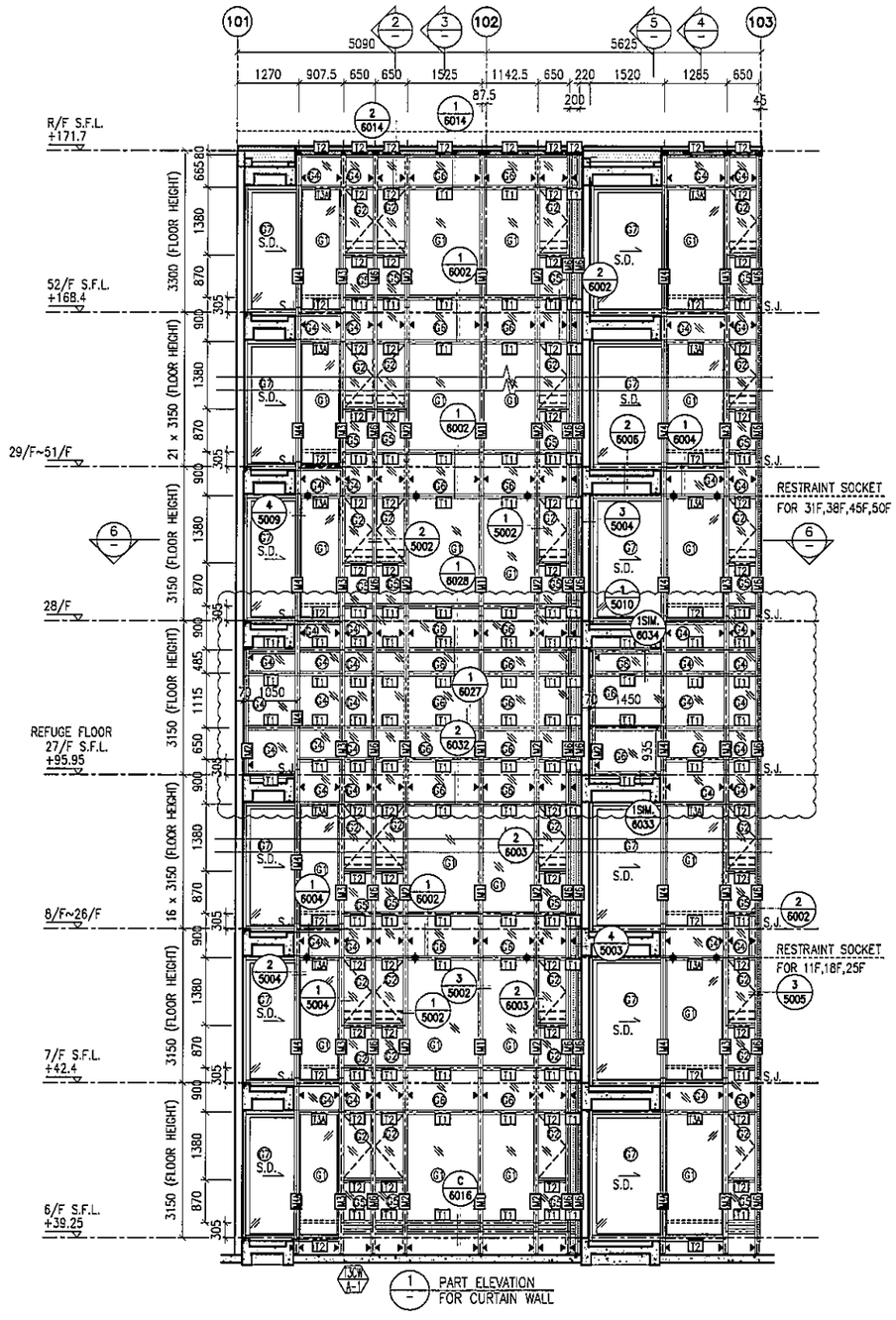

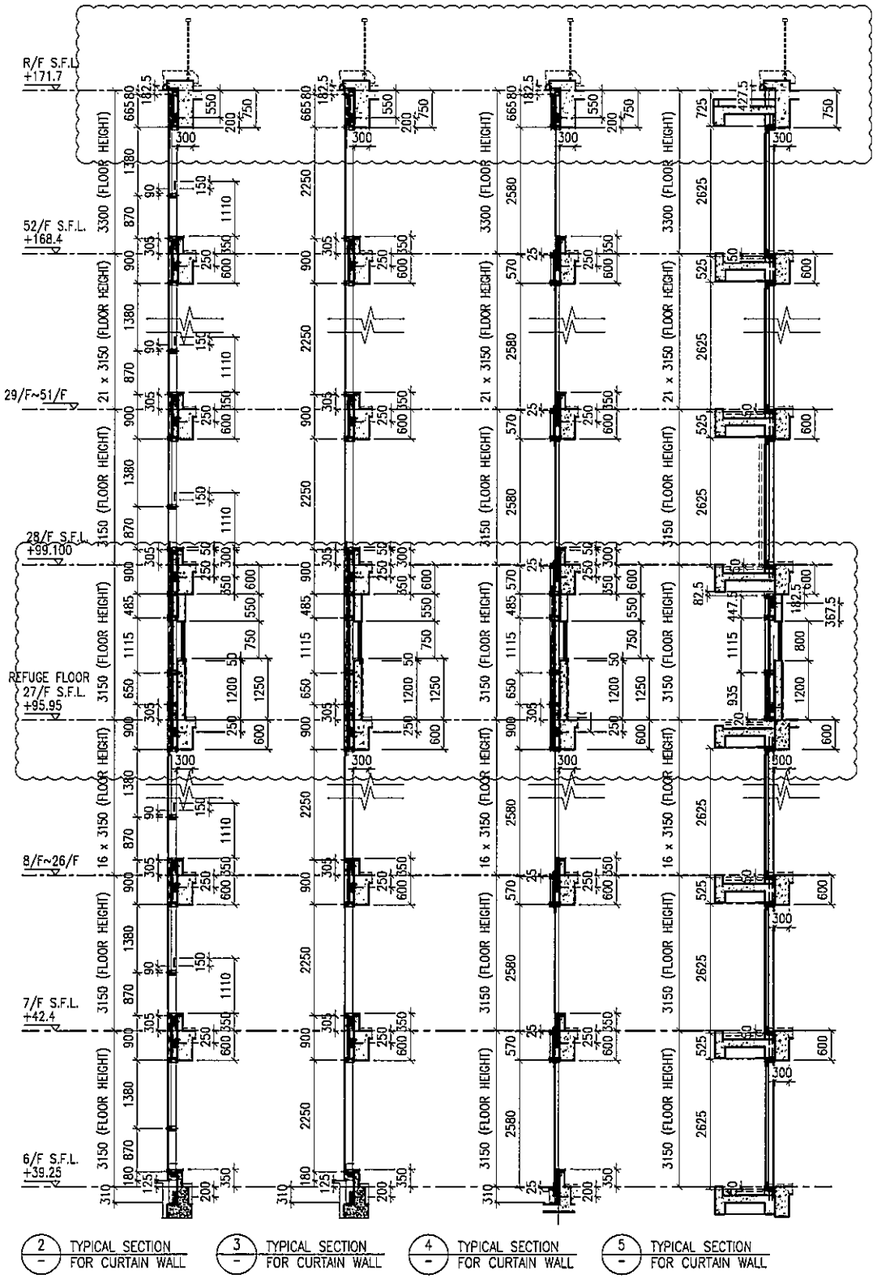

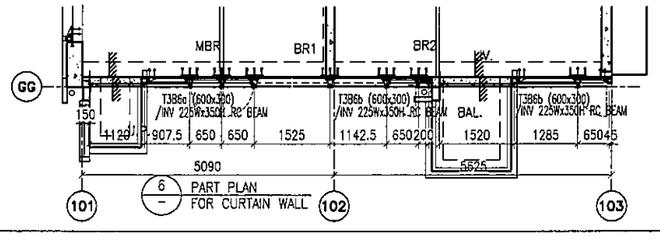

LEGEND:

- G1+ – 10 mm THK. TEMPERED BLUE TINTED GLASS (OUTER) + 9 mm AIR SPACE + 8 mm THK. TEMPERED CLEAR GLASS (INNER)
- G2+ – 8 mm THK. HEAT STRENGTHENED TINTED GLASS (OUTER)+ 9 mm AIR SPACE + 8 mm THK. HEAT STRENGTHENED CLEAR GLASS (INNER)
- G3+ – 10 mm THK. HEAT STRENGTHENED BLUE TINTED GLASS (OUTER)+ 9 mm AIR SPACE + 8 mm THK. TEMPERED CLEAR GLASS (INNER)
- G4+ – 8 mm THK. HEAT STRENGTHENED BLUE TINTED GLASS (SPANDREL GLASS)
- G5+ – 8 mm THK. HEAT STRENGTHENED BLUE TINTED GLASS (OUTER)+ 9 mm AIR SPACE + 8 mm THK. TEMPERED CLEAR GLASS (INNER)
- G6+ – 8 mm THK. TEMPERED BLUE TINTED GLASS (SPANDREL GLASS)
- G7+ – 8 mm THK. HEAT STRENGTHENED TINTED GLASS (OUTER)+ 1.52PVB + 8 mm THK. HEAT STRENGTHENED CLEAR LAMINATED GLASS (INNER) 10 mm THK. TEMPERED GLASS (INTERNAL PROTECTIVE BARRIER)
- 3 mm THK. ALUM. CLADDING
- M.W. – MAINTENANCE WINDOW
- S.J. – STACK JOINT
- AE01 – ALUM. EXTRUSION DIE NO.
- ▲ – SUPPORT POINT
- ◆ – RESTRAINT SOCKET

B.D. REF :

CLIENT :
信和置業有限公司
Sino Land Company Limited

ARCHITECT : WONG TUNG & PARTNERS LIMITED ARCHITECTS & PLANNERS

MAIN CONTRACTOR :
CR Construction Company Limited

STRUCTURAL ENGINEER :
AECOM

FACADE CONSULTANT:
AECOM

NOTE :
1. ALL DIMENSIONS ARE IN mm.
2. ALL ELEVATIONS ARE VIEWED FROM OUTSIDE.
3. ALL DIMENSIONS TO BE VERIFIED ON SITE BEFORE FABRICATION.

LEGEND :
- X1 / X001 — DETAIL MARK NO. / REFER SHEET NO.
1. F.F.L. --FINISHED FLOOR LEVEL
2. S.F.L. --STRUCTURAL FLOOR LEVEL
3. /R --REVERSED DETAIL

NO.	DATE	REVISED	BY
F	16/07/2019	GENERAL REVISED	
E	17/01/2019	GENERAL REVISED	
D	22/12/2018	GENERAL REVISED	
C	04/12/2018	GENERAL REVISED	
B	24/11/2018	GENERAL REVISED	
A	10/9/2018	GENERAL REVISED	

JOB NO. : J-837

PROJECT :
URA KWUN TONG TOWN CENTRE REDEVELOPMENT (AREA 2 & 3) AT NKIL 6514, KWUN TONG, KWLOON

TITLE :
PART ELEVATION OF CURTAIN WALL AT TOWER 3

DATE : 04-JUL-18	SCALE : 1:60 (A1)
DRAWN BY : ASING	CHECKED BY : –

美特鋁質有限公司
MIDI ALUMINIUM FABRICATOR LTD.
Units 6-8, Sunray Industrial Centre, 1/F
610 Cha Kwo Ling Road, Kowloon
Tel:23489211-4 Fax:(852)27727666

DWG NO. : J837-CW-2310 REV. : F

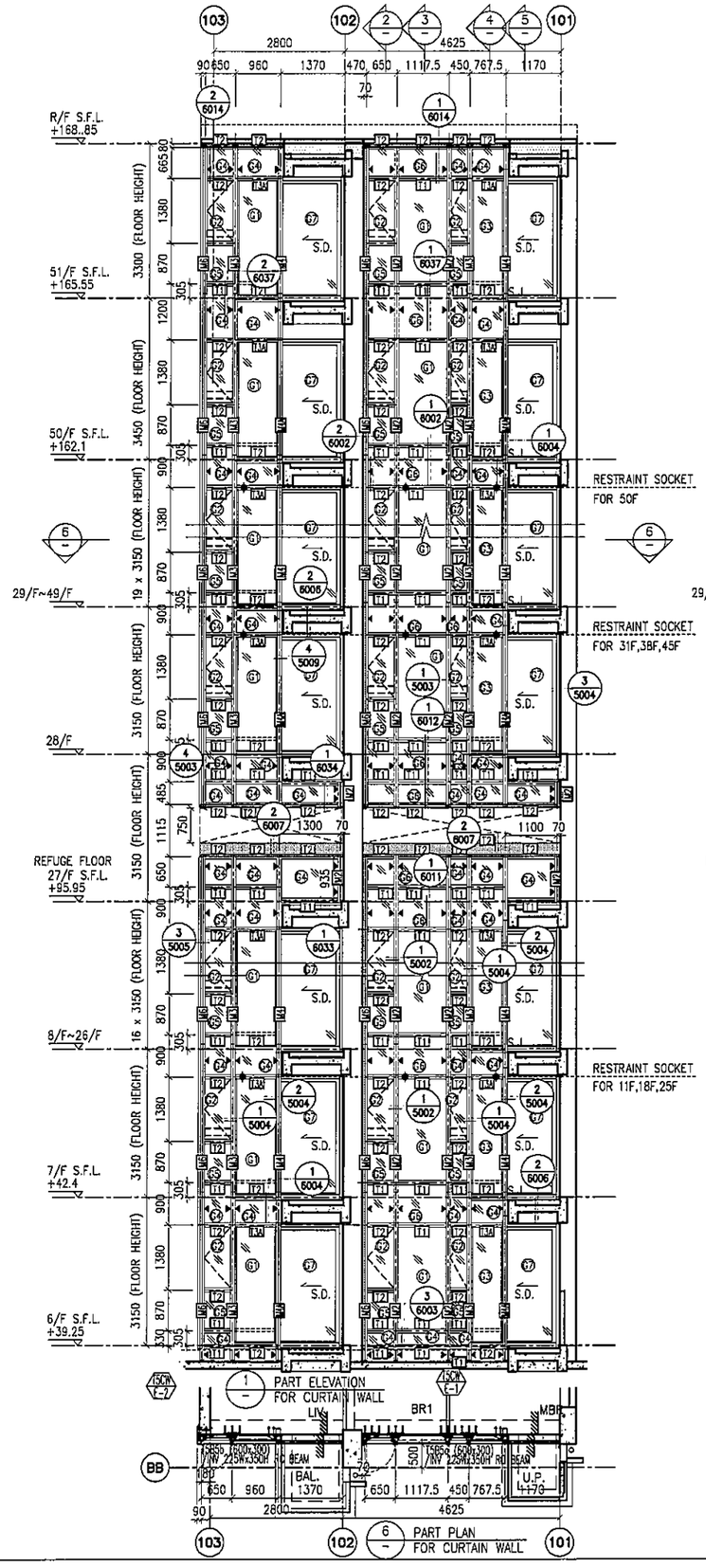

1 PART ELEVATION FOR CURTAIN WALL

6 PART PLAN FOR CURTAIN WALL

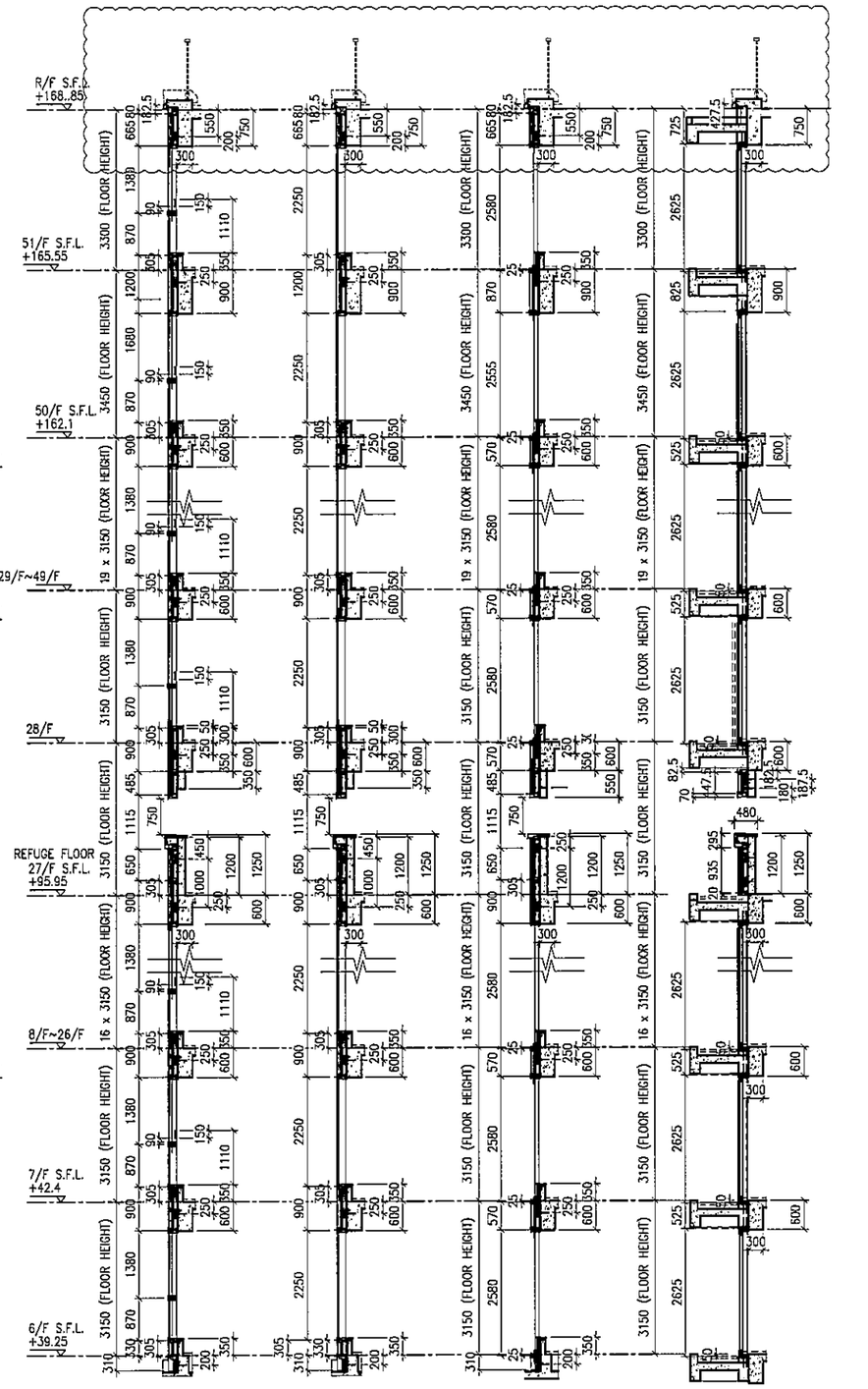

2 TYPICAL SECTION FOR CURTAIN WALL

3 TYPICAL SECTION FOR CURTAIN WALL

4 TYPICAL SECTION FOR CURTAIN WALL

5 TYPICAL SECTION FOR CURTAIN WALL

LEGEND:

- G1 – 10 mm THK. TEMPERED BLUE TINTED GLASS (OUTER) + 9 mm AIR SPACE + 8 mm THK. TEMPERED CLEAR GLASS (INNER)
- G2 – 8 mm THK. HEAT STRENGTHENED TINTED GLASS (OUTER)+ 9 mm AIR SPACE + 8 mm THK. HEAT STRENGTHENED CLEAR GLASS (INNER)
- G3 – 10 mm THK. HEAT STRENGTHENED BLUE TINTED GLASS (OUTER)+ 9 mm AIR SPACE + 8 mm THK. TEMPERED CLEAR GLASS (INNER)
- G4 – 8 mm THK. HEAT STRENGTHENED BLUE TINTED GLASS (SPANDREL GLASS)
- G5 – 8 mm THK. HEAT STRENGTHENED BLUE TINTED GLASS (OUTER)+ 9 mm AIR SPACE + 8 mm THK. TEMPERED CLEAR GLASS (INNER)
- G6 – 8 mm THK. TEMPERED BLUE TINTED GLASS (SPANDREL GLASS)
- G7 – 8 mm THK. HEAT STRENGTHENED TINTED GLASS (OUTER)+ 1.52PVB + 8 mm THK. HEAT STRENGTHENED CLEAR LAMINATED GLASS (INNER)
- 10 mm THK. TEMPERED GLASS (INTERNAL PROTECTIVE BARRIER)
- 3 mm THK. ALUM. CLADDING
- M.W. – MAINTENANCE WINDOW
- S.J. – STACK JOINT
- AK01 – ALUM. EXTRUSION DIE NO.
- ▲ – SUPPORT POINT
- ◆ – RESTRAINT SOCKET

B.D. REF :

CLIENT :
信和置業有限公司
Sino Land Company Limited

ARCHITECT :
WONG TUNG & PARTNERS LIMITED
ARCHITECTS & PLANNERS

MAIN CONTRACTOR :
CR Construction Company Limited

STRUCTURAL ENGINEER :
AECOM

FACADE CONSULTANT:
AECOM

NOTE :
1. ALL DIMENSIONS ARE IN mm.
2. ALL ELEVATIONS ARE VIEWED FROM OUTSIDE.
3. ALL DIMENSIONS TO BE VERIFIED ON SITE BEFORE FABRICATION.

LEGEND :
- X1 / X001 — DETAIL MARK NO. / REFER SHEET NO.
1. F.F.L. --FINISHED FLOOR LEVEL
2. S.F.L. --STRUCTURAL FLOOR LEVEL
3. /R --REVERSED DETAIL

NO.	DATE	REVISED	BY
F	16/07/2019	GENERAL REVISED	
E	17/01/2019	GENERAL REVISED	
D	22/12/2018	GENERAL REVISED	
C	04/12/2018	GENERAL REVISED	
B	24/11/2018	GENERAL REVISED	
A	10/9/2018	GENERAL REVISED	

JOB NO. : J-837

PROJECT :
URA KWUN TONG TOWN CENTRE REDEVELOPMENT (AREA 2 & 3) AT NKIL 6514, KWUN TONG, KWLOON

TITLE :
PART ELEVATION OF CURTAIN WALL AT TOWER 5

DATE : 04-JUL-18 | SCALE : 1:60 (A1)

DRAWN BY : ASING | CHECKED BY : --

美特鋁製有限公司
MIDI ALUMINIUM FABRICATOR LTD.
Units 6-8, Sunray Industrial Centre, 1/F
610 Cha Kwo Ling Road, Kowloon
Tel:23489211-4 Fax:(852)27727666

DWG NO. : J837-CW-2510 | REV. : F

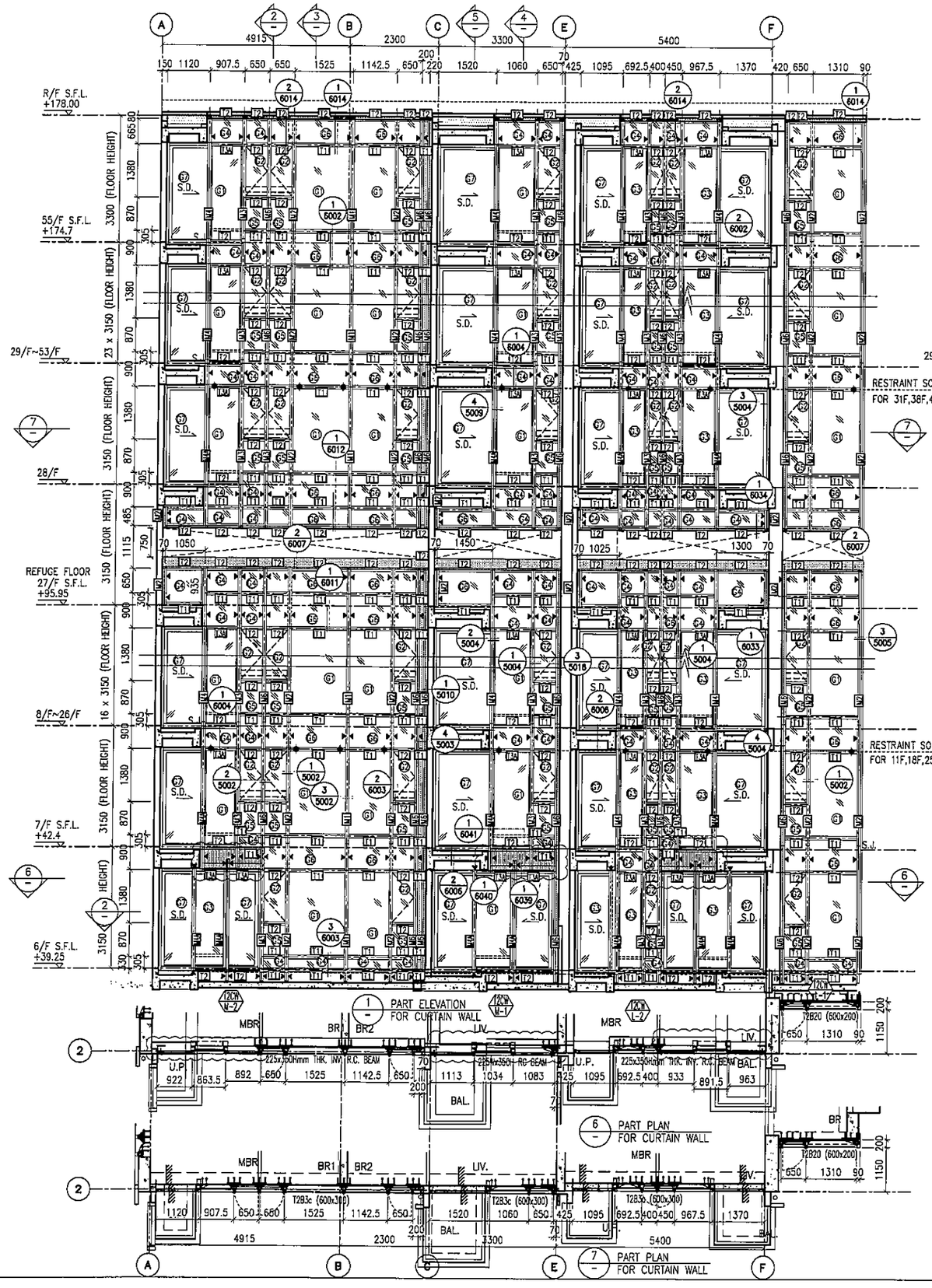

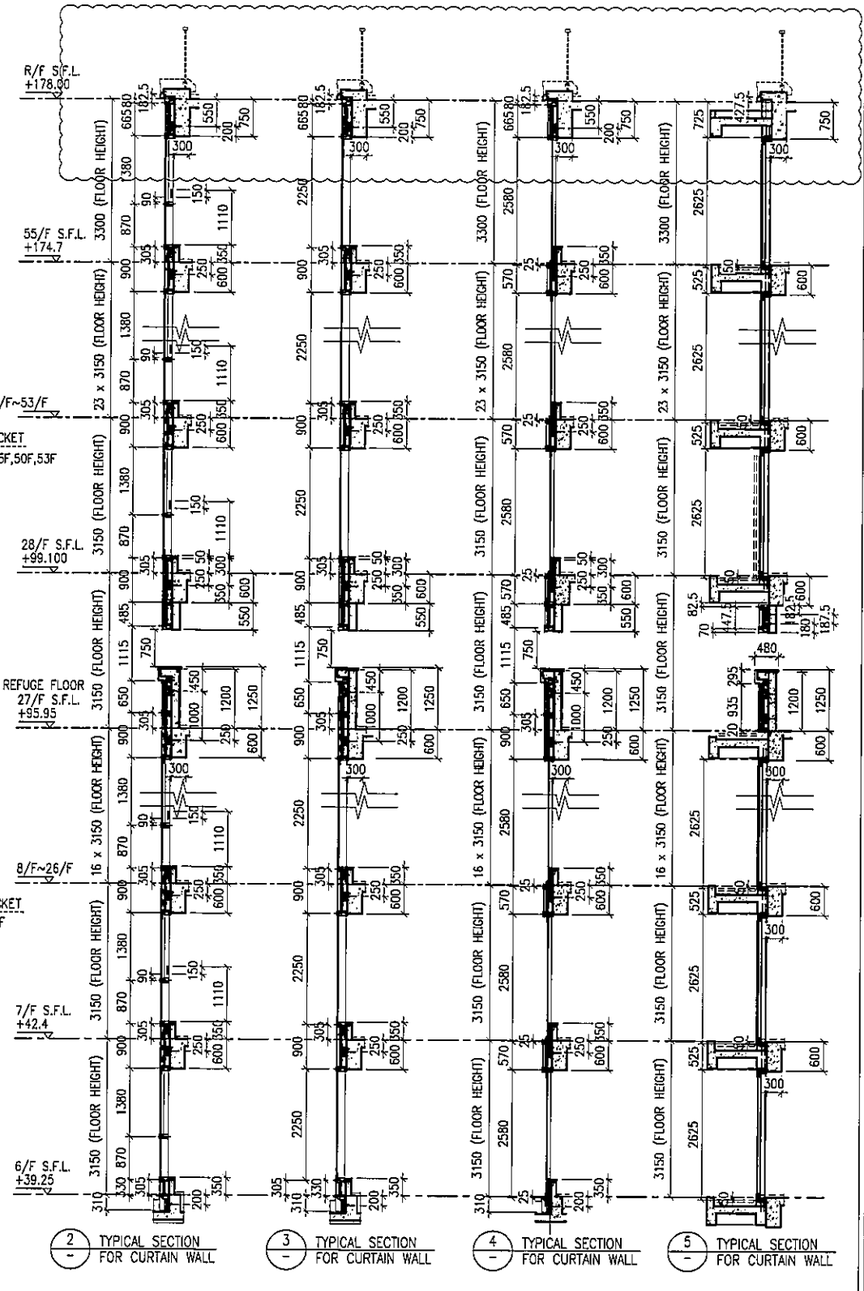

LEGEND:

- G1 – 10 mm THK. TEMPERED BLUE TINTED GLASS (OUTER) + 9 mm AIR SPACE + 8 mm THK. TEMPERED CLEAR GLASS (INNER)
- G2 – 8 mm THK. HEAT STRENGTHENED TINTED GLASS (OUTER)+ 9 mm AIR SPACE + 8 mm THK. HEAT STRENGTHENED CLEAR GLASS (INNER)
- G3 – 10 mm THK. HEAT STRENGTHENED BLUE TINTED GLASS (OUTER)+ 9 mm AIR SPACE + 8 mm THK. TEMPERED CLEAR GLASS (INNER)
- G4 – 8 mm THK. HEAT STRENGTHENED BLUE TINTED GLASS (SPANDREL GLASS)
- G5 – 8 mm THK. HEAT STRENGTHENED BLUE TINTED GLASS (OUTER)+ 9 mm AIR SPACE + 8 mm THK. TEMPERED CLEAR GLASS (INNER)
- G5 – 8 mm THK. TEMPERED BLUE TINTED GLASS (SPANDREL GLASS)
- G7 – 8 mm THK. HEAT STRENGTHENED TINTED GLASS (OUTER)+ 1.52PVB + 8 mm THK. HEAT STRENGTHENED CLEAR LAMINATED GLASS (INNER) 10 mm THK. TEMPERED GLASS (INTERNAL PROTECTIVE BARRIER)
- 3 mm THK. ALUM. CLADDING
- M.W. – MAINTENANCE WINDOW
- S.J. – STACK JOINT
- AF01 – ALUM. EXTRUSION DIE NO.
- ▲ – SUPPORT POINT
- ◆ – RESTRAINT SOCKET

B.D. REF :

CLIENT :
信和置業有限公司
Sino Land Company Limited

ARCHITECT :
WONG TUNG & PARTNERS LIMITED
ARCHITECTS & PLANNERS

MAIN CONTRACTOR :
CR Construction Company Limited

STRUCTURAL ENGINEER :
AECOM

FACADE CONSULTANT:
AECOM

NOTE :
1. ALL DIMENSIONS ARE IN mm.
2. ALL ELEVATIONS ARE VIEWED FROM OUTSIDE.
3. ALL DIMENSIONS TO BE VERIFIED ON SITE BEFORE FABRICATION.

LEGEND :
X1 / X001 – DETAIL MARK NO. / REFER SHEET NO.
1. F.F.L. --FINISHED FLOOR LEVEL
2. S.F.L. --STRUCTURAL FLOOR LEVEL
3. (R) --REVERSED DETAIL

NO.	DATE	REVISED	BY
G	16/07/2019	GENERAL REVISED	
F	26/05/2019	GENERAL REVISED	
E	17/01/2019	GENERAL REVISED	
D	22/12/2018	GENERAL REVISED	
C	04/12/2018	GENERAL REVISED	
B	24/11/2018	GENERAL REVISED	
A	10/9/2018	GENERAL REVISED	

JOB NO. : J-837

PROJECT :
URA KWUN TONG TOWN CENTRE REDEVELOPMENT (AREA 2 & 3) AT NKIL 6514, KWUN TONG, KWLOON

TITLE :
PART ELEVATION OF CURTAIN WALL AT TOWER 2

DATE : 04-JUL-18 | SCALE : 1:60 (A1)

DRAWN BY : ASING | CHECKED BY : –

美特鋁質有限公司
MIDI ALUMINIUM FABRICATOR LTD.
Units 6-8, Sunray Industrial Centre, 1/F
610 Cha Kwo Ling Road, Kowloon
Tel:23489211-4 Fax:(852)27727666

DWG NO. : J837-CW-2211 | REV. : G

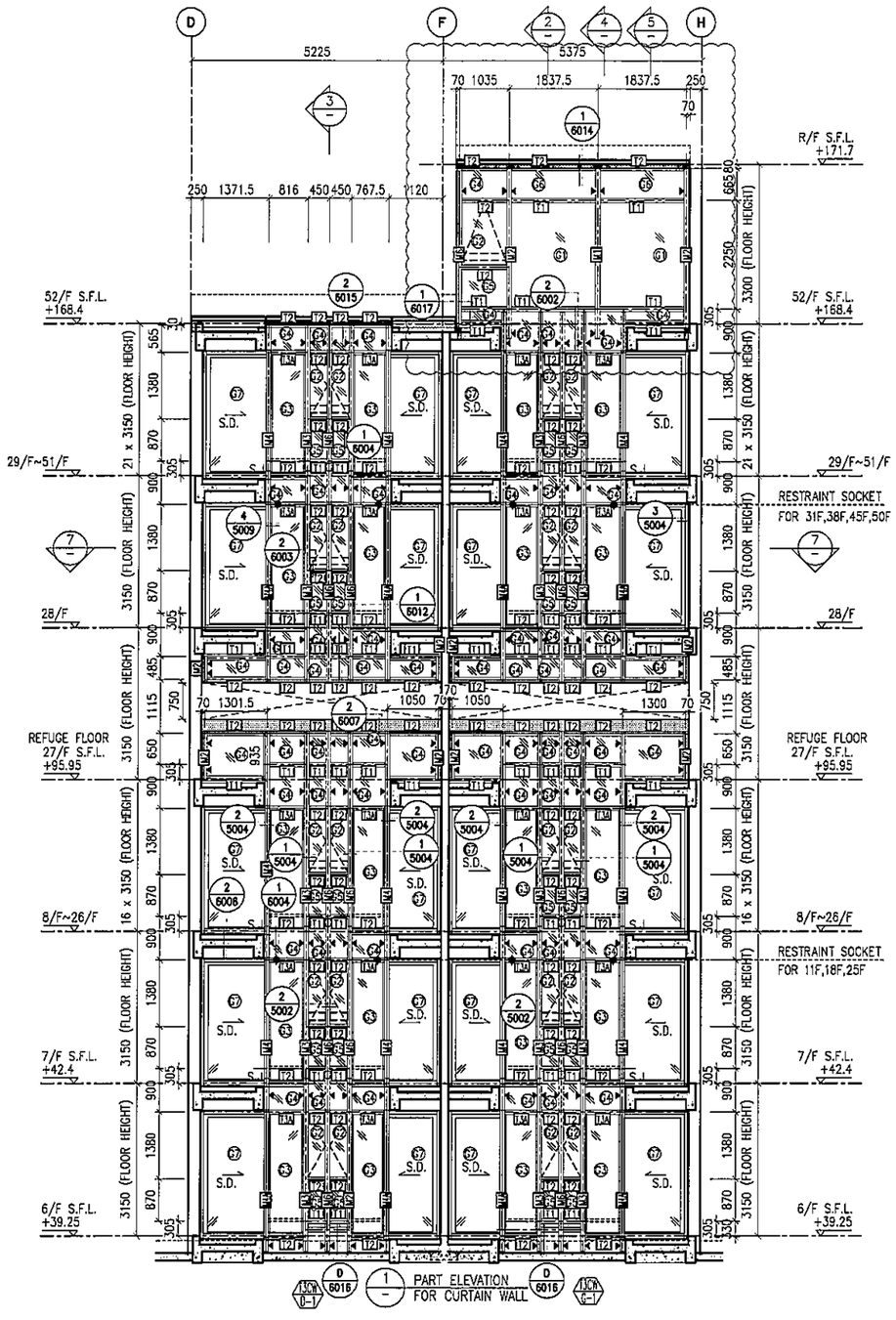

1 / PART ELEVATION FOR CURTAIN WALL

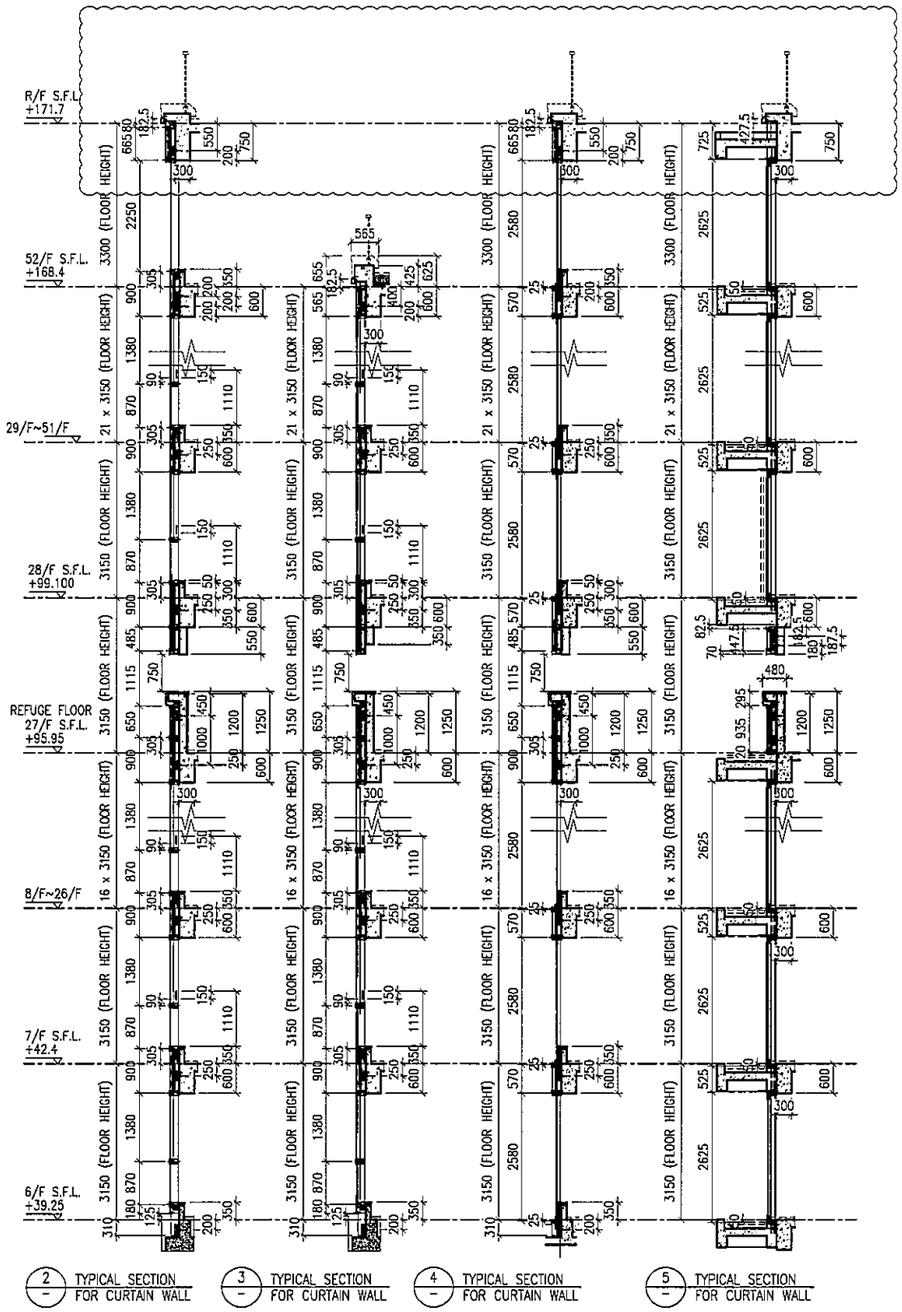

2 / TYPICAL SECTION FOR CURTAIN WALL

3 / TYPICAL SECTION FOR CURTAIN WALL

4 / TYPICAL SECTION FOR CURTAIN WALL

5 / TYPICAL SECTION FOR CURTAIN WALL

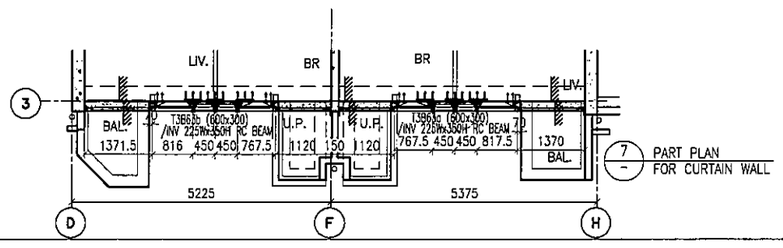

7 / PART PLAN FOR CURTAIN WALL

LEGEND:

- 10 mm THK. TEMPERED BLUE TINTED GLASS (OUTER) + 9 mm AIR SPACE + 8 mm THK. TEMPERED CLEAR GLASS (INNER)
- 8 mm THK. HEAT STRENGTHENED TINTED GLASS (OUTER)+ 9 mm AIR SPACE + 8 mm THK. HEAT STRENGTHENED CLEAR GLASS (INNER)
- 10 mm THK. HEAT STRENGTHENED BLUE TINTED GLASS (OUTER)+ 9 mm AIR SPACE + 8 mm THK. TEMPERED CLEAR GLASS (INNER)
- 8 mm THK. HEAT STRENGTHENED BLUE TINTED GLASS (SPANDREL GLASS)
- 8 mm THK. HEAT STRENGTHENED BLUE TINTED GLASS (OUTER)+ 9 mm AIR SPACE + 8 mm THK. TEMPERED CLEAR GLASS (INNER)
- 8 mm THK. TEMPERED BLUE TINTED GLASS (SPANDREL GLASS)
- 8 mm THK. HEAT STRENGTHENED TINTED GLASS (OUTER)+ 1.52PVB + 8 mm THK. HEAT STRENGTHENED CLEAR LAMINATED GLASS (INNER) 10 mm THK. TEMPERED GLASS (INTERNAL PROTECTIVE BARRIER)
- 3 mm THK. ALUM. CLADDING
- M.W. – MAINTENANCE WINDOW
- S.J. – STACK JOINT
- AE01 – ALUM. EXTRUSION DIE NO.
- ▲ – SUPPORT POINT
- ◆ – RESTRAINT SOCKET

B.D. REF :

CLIENT :
信和置業有限公司
Sino Land Company Limited

ARCHITECT :
WONG TUNG & PARTNERS LIMITED
ARCHITECTS & PLANNERS

MAIN CONTRACTOR :
CR Construction Company Limited

STRUCTURAL ENGINEER :
AECOM

FACADE CONSULTANT:
AECOM

NOTE :
1. ALL DIMENSIONS ARE IN mm.
2. ALL ELEVATIONS ARE VIEWED FROM OUTSIDE.
3. ALL DIMENSIONS TO BE VERIFIED ON SITE BEFORE FABRICATION.

LEGEND :
X1 — DETAIL MARK NO.
X001 — REFER SHEET NO.

1. F.F.L. --FINISHED FLOOR LEVEL
2. S.F.L. --STRUCTURAL FLOOR LEVEL
3. /R --REVERSED DETAIL

NO.	DATE	REVISED	BY
H	16/07/2019	GENERAL REVISED	
G	26/05/2019	GENERAL REVISED	
F	22/05/2019	GENERAL REVISED	
E	17/01/2019	GENERAL REVISED	
D	22/12/2018	GENERAL REVISED	
C	04/12/2018	GENERAL REVISED	
B	24/11/2018	GENERAL REVISED	
A	10/9/2018	GENERAL REVISED	

JOB NO. : J-837

PROJECT :
URA KWUN TONG TOWN CENTRE REDEVELOPMENT (AREA 2 & 3) AT NKIL 6514, KWUN TONG, KWLOON

TITLE :
PART ELEVATION OF CURTAIN WALL AT TOWER 3

DATE : 04-JUL-18 | SCALE : 1:60 (A1)

DRAWN BY : ASING | CHECKED BY : --

美特鋁製有限公司
MIDI ALUMINIUM FABRICATOR LTD.
Units 6-8, Sunray Industrial Centre, 1/F
610 Cha Kwo Ling Road, Kowloon
Tel:23489211-4 Fax:(852)27727666

DWG NO. : JB37-CW-2311 | REV. : H

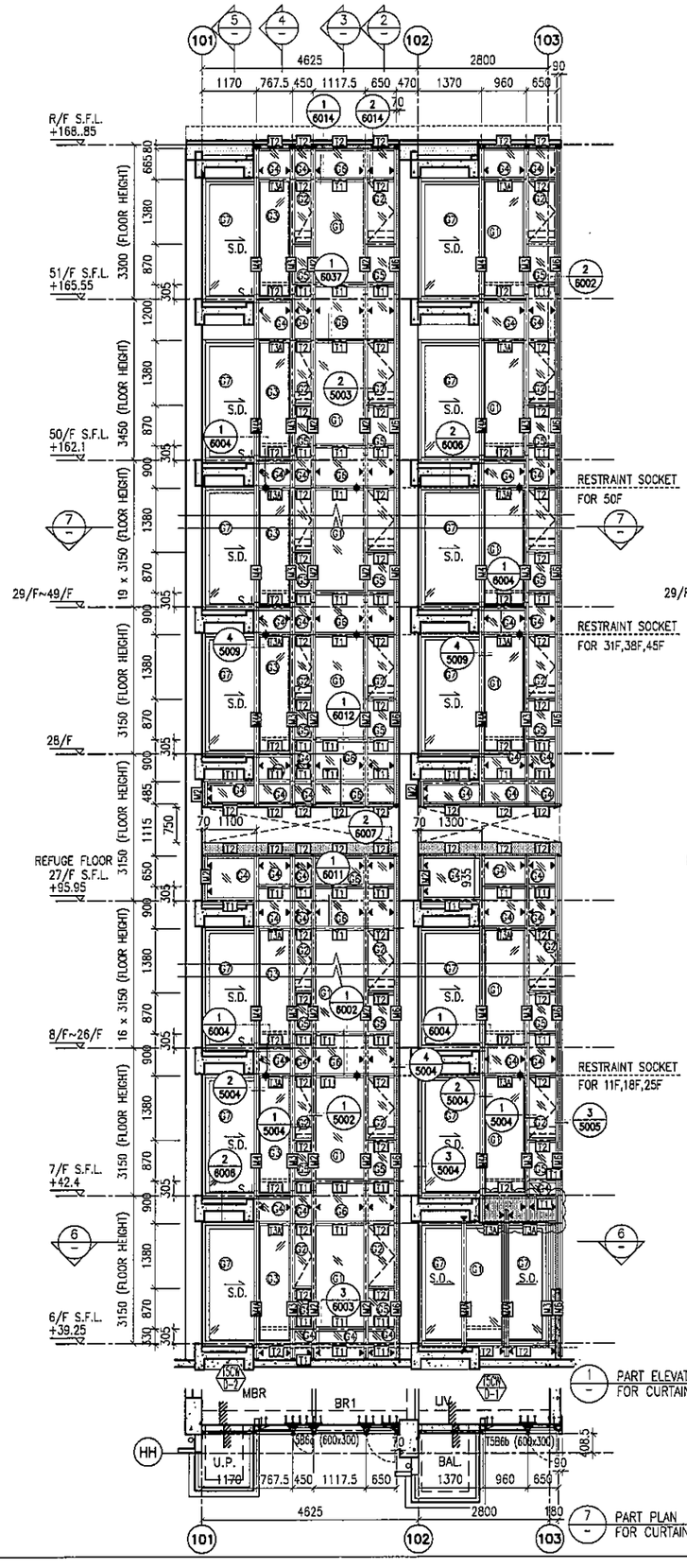

1 PART ELEVATION FOR CURTAIN WALL

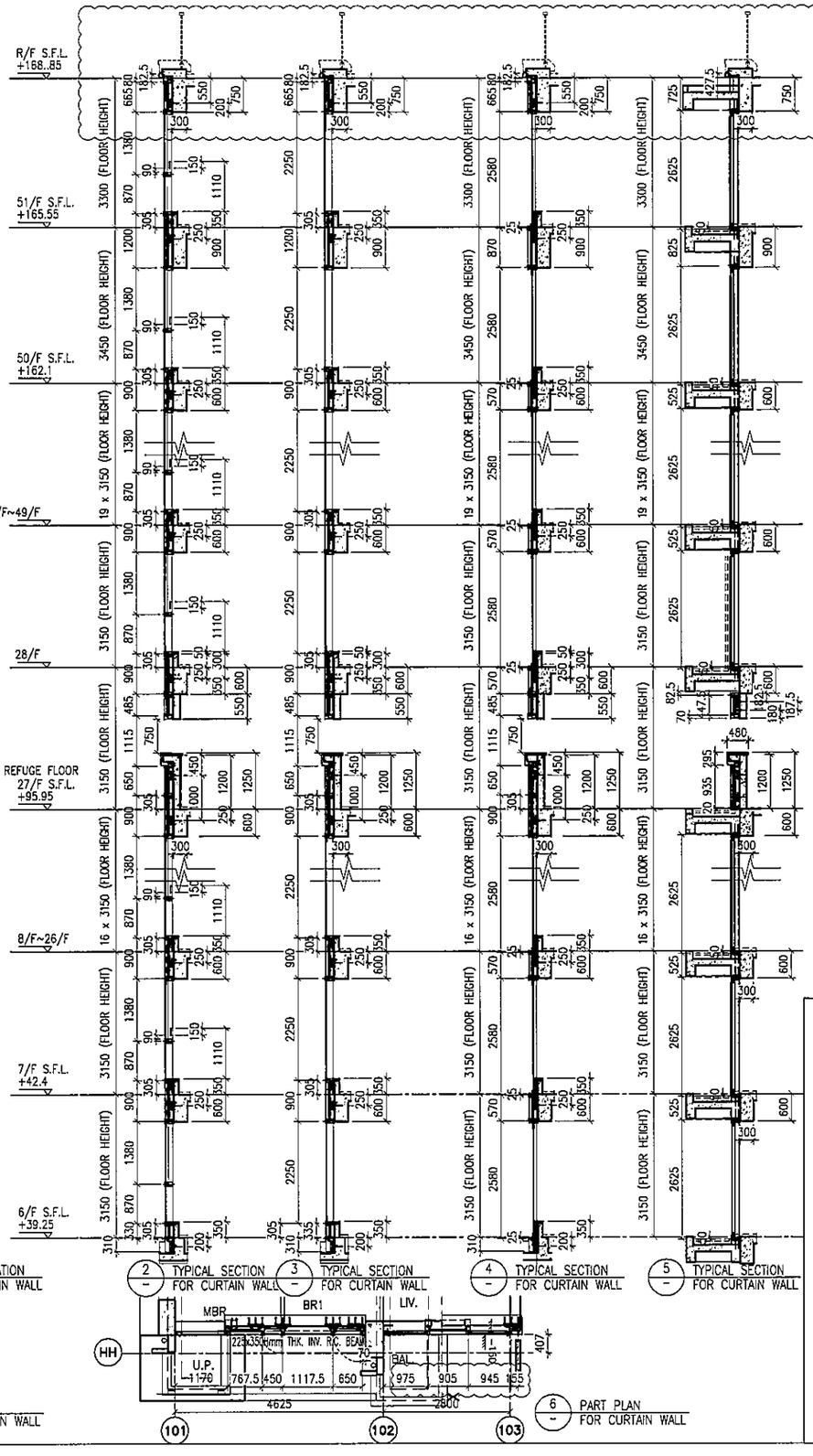

2 TYPICAL SECTION FOR CURTAIN WALL

3 TYPICAL SECTION FOR CURTAIN WALL

4 TYPICAL SECTION FOR CURTAIN WALL

5 TYPICAL SECTION FOR CURTAIN WALL

6 PART PLAN FOR CURTAIN WALL

7 PART PLAN FOR CURTAIN WALL

LEGEND:

- 10 mm THK. TEMPERED BLUE TINTED GLASS (OUTER) + 9 mm AIR SPACE + 8 mm THK. TEMPERED CLEAR GLASS (INNER)
- 8 mm THK. HEAT STRENGTHENED TINTED GLASS (OUTER)+ 9 mm AIR SPACE + 8 mm THK. HEAT STRENGTHENED CLEAR GLASS (INNER)
- 10 mm THK. HEAT STRENGTHENED BLUE TINTED GLASS (OUTER)+ 9 mm AIR SPACE + 8 mm THK. TEMPERED CLEAR GLASS (INNER)
- 8 mm THK. HEAT STRENGTHENED BLUE TINTED GLASS (SPANDREL GLASS)
- 8 mm THK. HEAT STRENGTHENED BLUE TINTED GLASS (OUTER)+ 9 mm AIR SPACE + 8 mm THK. TEMPERED CLEAR GLASS (INNER)
- 8 mm THK. TEMPERED BLUE TINTED GLASS (SPANDREL GLASS)
- 8 mm THK. HEAT STRENGTHENED TINTED GLASS (OUTER)+ 1.52PVB + 8 mm THK. HEAT STRENGTHENED CLEAR LAMINATED GLASS (INNER)
- 10 mm THK. TEMPERED GLASS (INTERNAL PROTECTIVE BARRIER)
- 3 mm THK. ALUM. CLADDING
- M.W. – MAINTENANCE WINDOW
- S.J. – STACK JOINT
- AF-01 – ALUM. EXTRUSION DIE NO.
- ▲ – SUPPORT POINT
- ✦ – RESTRAINT SOCKET

B.D. REF :

CLIENT :
信和置業有限公司
Sino Land Company Limited

ARCHITECT :
WONG TUNG & PARTNERS LIMITED
ARCHITECTS & PLANNERS

MAIN CONTRACTOR :
CR Construction Company Limited

STRUCTURAL ENGINEER :
AECOM

FACADE CONSULTANT:
AECOM

NOTE :
1. ALL DIMENSIONS ARE IN mm.
2. ALL ELEVATIONS ARE VIEWED FROM OUTSIDE.
3. ALL DIMENSIONS TO BE VERIFIED ON SITE BEFORE FABRICATION.

LEGEND :
(X1 / X001) — DETAIL MARK NO. / REFER SHEET NO.
1. F.F.L. --FINISHED FLOOR LEVEL
2. S.F.L. --STRUCTURAL FLOOR LEVEL
3. /R --REVERSED DETAIL

NO.	DATE	REVISED	BY
G	16/07/2019	GENERAL REVISED	
F	26/05/2019	GENERAL REVISED	
E	17/01/2019	GENERAL REVISED	
D	22/12/2018	GENERAL REVISED	
C	04/12/2018	GENERAL REVISED	
B	24/11/2018	GENERAL REVISED	
A	10/9/2018	GENERAL REVISED	

JOB NO. : J-837

PROJECT :
URA KWUN TONG TOWN CENTRE REDEVELOPMENT (AREA 2 & 3) AT NKIL 6514, KWUN TONG, KWLOON

TITLE :
PART ELEVATION OF CURTAIN WALL AT TOWER 5

DATE : 04-JUL-18 | SCALE : 1:60 (A1)

DRAWN BY : ASING | CHECKED BY : –

美特鋁質有限公司
MIDI ALUMINIUM FABRICATOR LTD.
Units 6-8, Sunray Industrial Centre, 1/F
610 Cha Kwo Ling Road, Kowloon
Tel:23489211-4 Fax:(852)27727666

DWG NO. : J837-CW-2511 | REV. : G

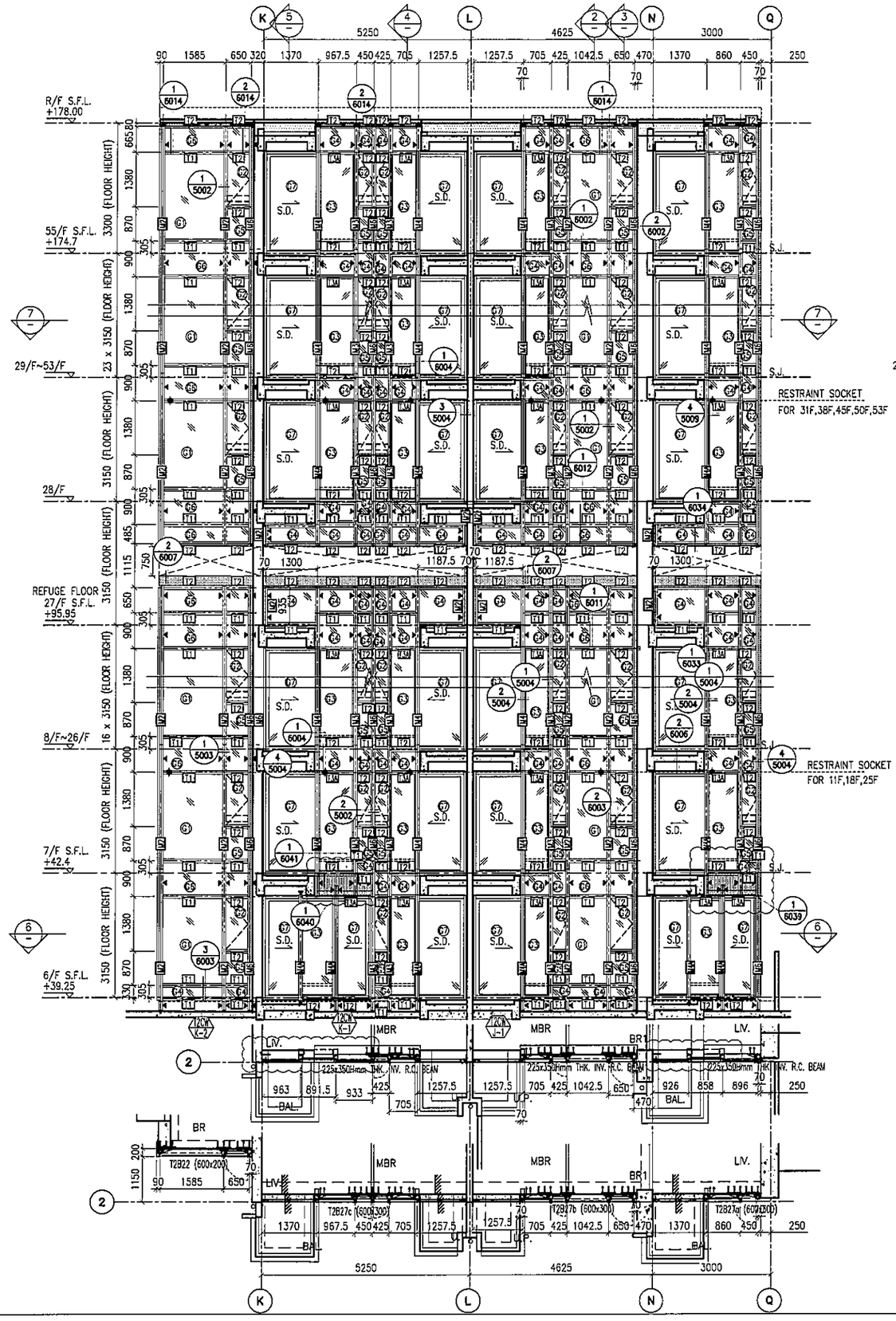

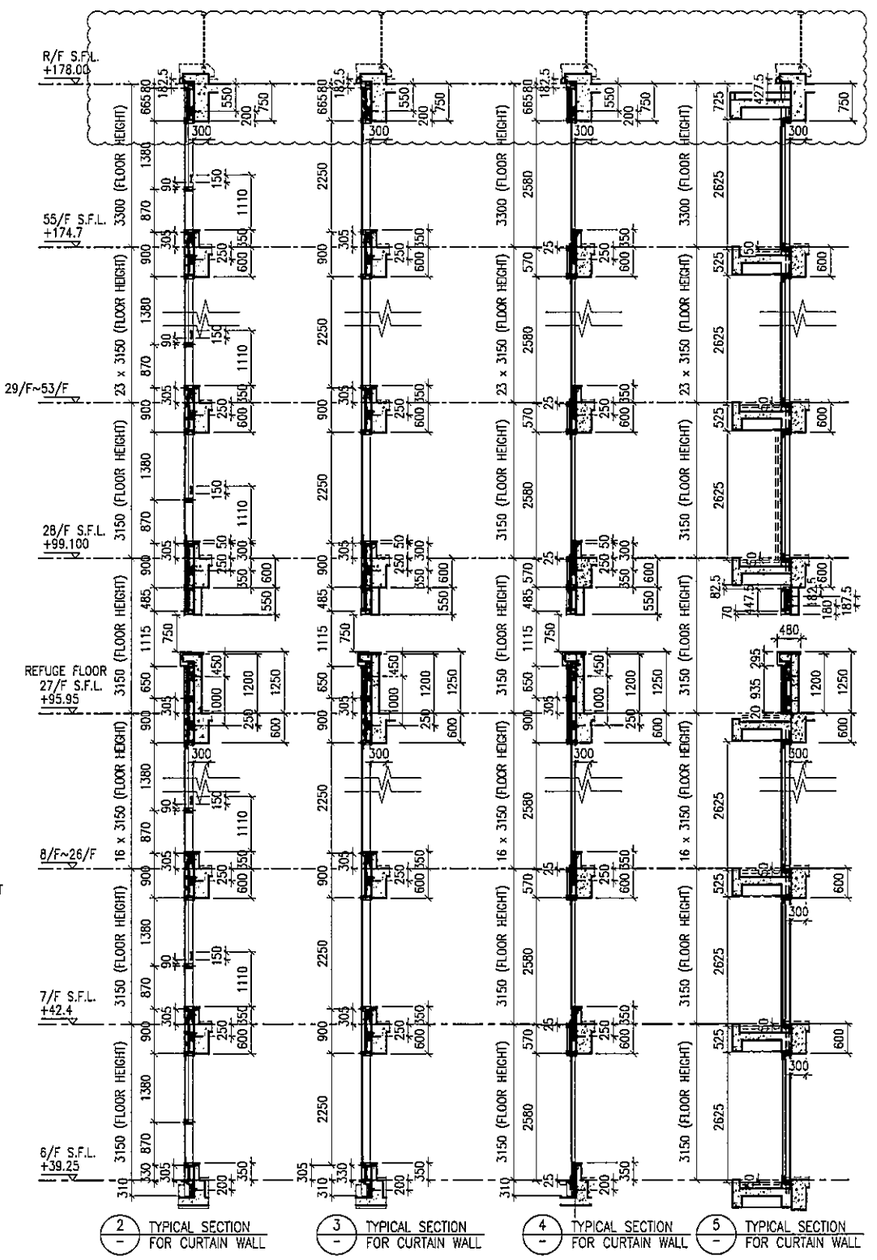

LEGEND:

- 10 mm THK. TEMPERED BLUE TINTED GLASS (OUTER) + 9 mm AIR SPACE + 8 mm THK. TEMPERED CLEAR GLASS (INNER)
- 8 mm THK. HEAT STRENGTHENED TINTED GLASS (OUTER)+ 9 mm AIR SPACE + 8 mm THK. HEAT STRENGTHENED CLEAR GLASS (INNER)
- 10 mm THK. HEAT STRENGTHENED BLUE TINTED GLASS (OUTER)+ 9 mm AIR SPACE + 8 mm THK. TEMPERED CLEAR GLASS (INNER)
- 8 mm THK. HEAT STRENGTHENED BLUE TINTED GLASS (SPANDREL GLASS)
- 8 mm THK. HEAT STRENGTHENED BLUE TINTED GLASS (OUTER)+ 9 mm AIR SPACE + 8 mm THK. TEMPERED CLEAR GLASS (INNER)
- 8 mm THK. TEMPERED BLUE TINTED GLASS (SPANDREL GLASS)
- 8 mm THK. HEAT STRENGTHENED TINTED GLASS (OUTER)+ 1.52PVB + 8 mm THK. HEAT STRENGTHENED CLEAR LAMINATED GLASS (INNER) 10 mm THK. TEMPERED GLASS (INTERNAL PROTECTIVE BARRIER)
- 3 mm THK. ALUM. CLADDING
- M.W. – MAINTENANCE WINDOW
- S.J. – STACK JOINT
- AE01 – ALUM. EXTRUSION DIE NO.
- ▲ – SUPPORT POINT
- ✦ – RESTRAINT SOCKET

B.D. REF :

CLIENT :
信和置業有限公司
Sino Land Company Limited

ARCHITECT : WONG TUNG & PARTNERS LIMITED ARCHITECTS & PLANNERS

MAIN CONTRACTOR :
CR Construction Company Limited

STRUCTURAL ENGINEER : AECOM

FACADE CONSULTANT: AECOM

NOTE :
1. ALL DIMENSIONS ARE IN mm.
2. ALL ELEVATIONS ARE VIEWED FROM OUTSIDE.
3. ALL DIMENSIONS TO BE VERIFIED ON SITE BEFORE FABRICATION.

LEGEND :
- X1 / XD01 — DETAIL MARK NO. / REFER SHEET NO.
1. F.F.L. --FINISHED FLOOR LEVEL
2. S.F.L. --STRUCTURAL FLOOR LEVEL
3. /R --REVERSED DETAIL

NO.	DATE	REVISED	BY
G	16/07/2019	GENERAL REVISED	
F	26/05/2019	GENERAL REVISED	
E	17/01/2019	GENERAL REVISED	
D	22/12/2018	GENERAL REVISED	
C	04/12/2018	GENERAL REVISED	
B	24/11/2018	GENERAL REVISED	
A	10/9/2018	GENERAL REVISED	

JOB NO. : J-837

PROJECT :
URA KWUN TONG TOWN CENTRE REDEVELOPMENT (AREA 2 & 3) AT NKIL 6514, KWUN TONG, KWLOON

TITLE :
PART ELEVATION OF CURTAIN WALL AT TOWER 2

DATE : 04-JUL-18 | SCALE : 1:60 (A1)

DRAWN BY : ASING | CHECKED BY : –

美特鋁製有限公司
MIDI ALUMINIUM FABRICATOR LTD.
Units 6-8, Sunray Industrial Centre, 1/F
610 Cha Kwo Ling Road, Kowloon
Tel:23489211-4 Fax:(852)27727666

DWG NO. : J837-CW-2212 | REV. : G

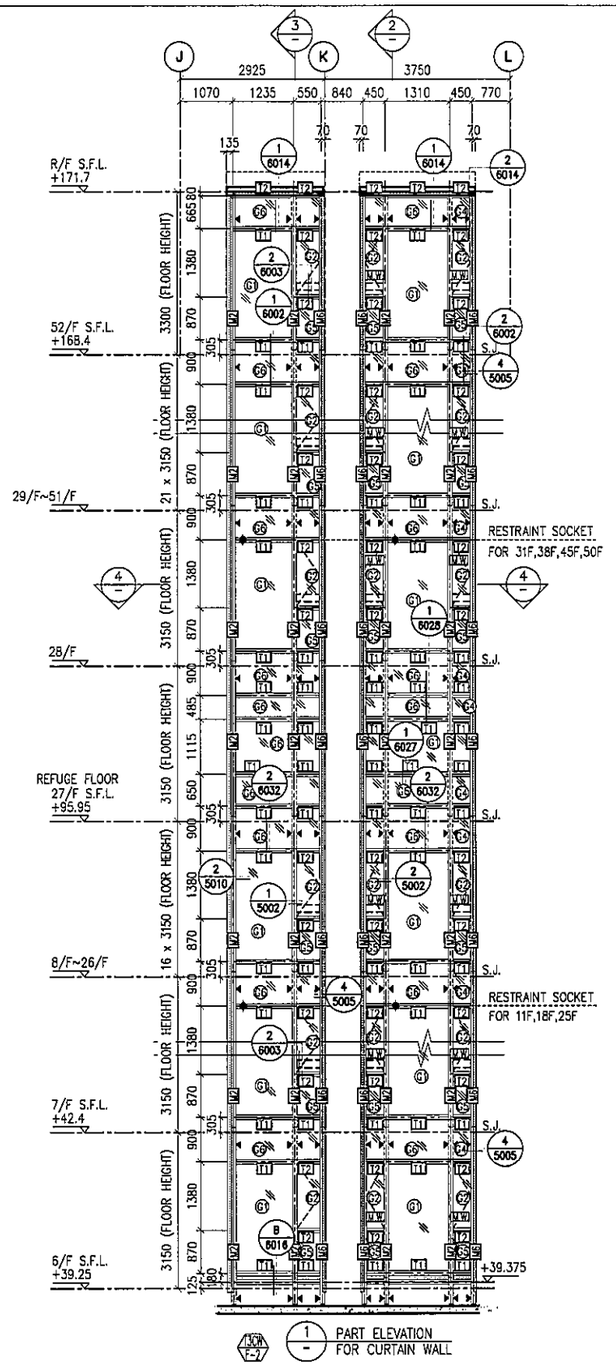

1 PART ELEVATION FOR CURTAIN WALL

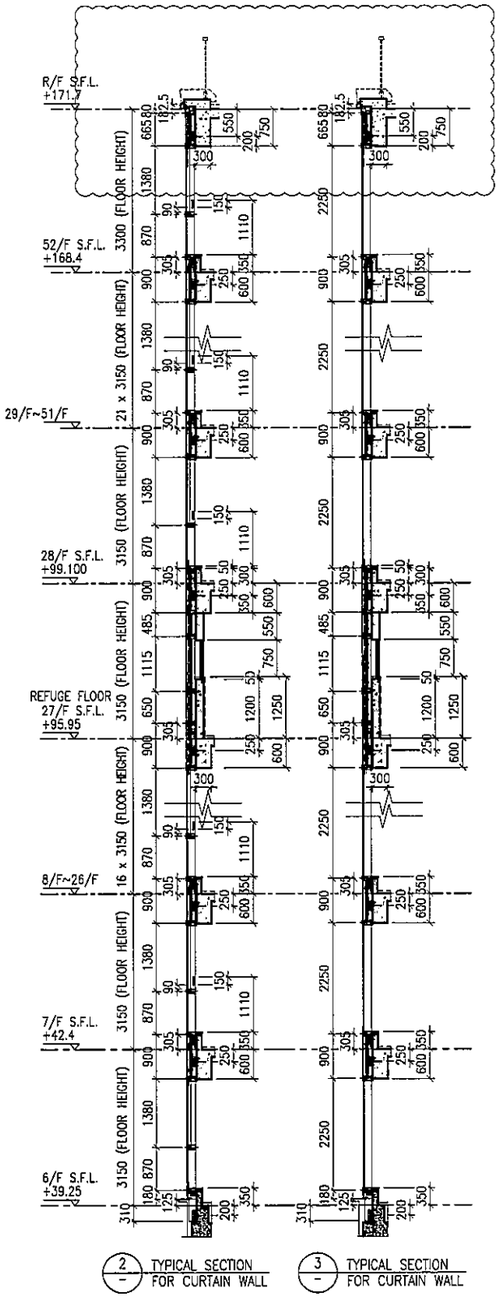

2 TYPICAL SECTION FOR CURTAIN WALL

3 TYPICAL SECTION FOR CURTAIN WALL

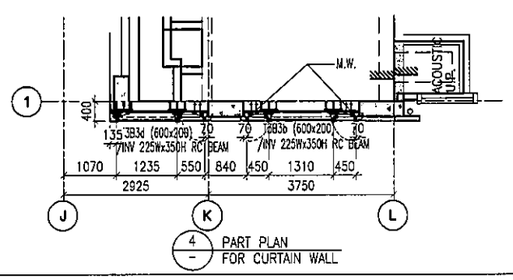

4 PART PLAN FOR CURTAIN WALL

LEGEND:

- 10 mm THK. TEMPERED BLUE TINTED GLASS (OUTER) + 9 mm AIR SPACE + 8 mm THK. TEMPERED CLEAR GLASS (INNER)
- 8 mm THK. HEAT STRENGTHENED TINTED GLASS (OUTER)+ 9 mm AIR SPACE + 8 mm THK. HEAT STRENGTHENED CLEAR GLASS (INNER)
- 10 mm THK. HEAT STRENGTHENED BLUE TINTED GLASS (OUTER)+ 9 mm AIR SPACE + 8 mm THK. TEMPERED CLEAR GLASS (INNER)
- 8 mm THK. HEAT STRENGTHENED BLUE TINTED GLASS (SPANDREL GLASS)
- 8 mm THK. HEAT STRENGTHENED BLUE TINTED GLASS (OUTER)+ 9 mm AIR SPACE + 8 mm THK. TEMPERED CLEAR GLASS (INNER)
- 8 mm THK. TEMPERED BLUE TINTED GLASS (SPANDREL GLASS)
- 8 mm THK. HEAT STRENGTHENED TINTED GLASS (OUTER)+ 1.52PVB + 8 mm THK. HEAT STRENGTHENED CLEAR LAMINATED GLASS (INNER) 10 mm THK. TEMPERED GLASS (INTERNAL PROTECTIVE BARRIER)
- 3 mm THK. ALUM. CLADDING
- M.W. - MAINTENANCE WINDOW
- S.J. - STACK JOINT
- AE01 - ALUM. EXTRUSION DIE NO.
- ▲ - SUPPORT POINT
- ◆ - RESTRAINT SOCKET

B.D. REF :

CLIENT :
信和置業有限公司
Sino Land Company Limited

ARCHITECT :
WONG TUNG & PARTNERS LIMITED
ARCHITECTS & PLANNERS

MAIN CONTRACTOR :
CR Construction Company Limited

STRUCTURAL ENGINEER :
AECOM

FACADE CONSULTANT:
AECOM

NOTE :
1. ALL DIMENSIONS ARE IN mm.
2. ALL ELEVATIONS ARE VIEWED FROM OUTSIDE.
3. ALL DIMENSIONS TO BE VERIFIED ON SITE BEFORE FABRICATION.

LEGEND :
- X1 / X001 — DETAIL MARK NO. / REFER SHEET NO.
1. F.F.L. --FINISHED FLOOR LEVEL
2. S.F.L. --STRUCTURAL FLOOR LEVEL
3. /R --REVERSED DETAIL

NO	DATE	REVISED	BY
F	16/07/2019	GENERAL REVISED	
E	17/01/2019	GENERAL REVISED	
D	22/12/2018	GENERAL REVISED	
C	04/12/2018	GENERAL REVISED	
B	24/11/2018	GENERAL REVISED	
A	10/9/2018	GENERAL REVISED	

JOB NO. : J-837

PROJECT :
URA KWUN TONG TOWN CENTRE REDEVELOPMENT (AREA 2 & 3) AT NKIL 6514, KWUN TONG, KWLOON

TITLE :
PART ELEVATION OF CURTAIN WALL AT TOWER 3

DATE : 04-JUL-18	SCALE : 1:60 (A1)
DRAWN BY : ASING	CHECKED BY : --

美特鋁質有限公司
MIDI ALUMINIUM FABRICATOR LTD.
Units 6-8, Sunray Industrial Centre, 1/F
610 Cha Kwo Ling Road, Kowloon
Tel:23489211-4 Fax:(852)27727666

DWG NO. : J837-CW-2312 REV. : F

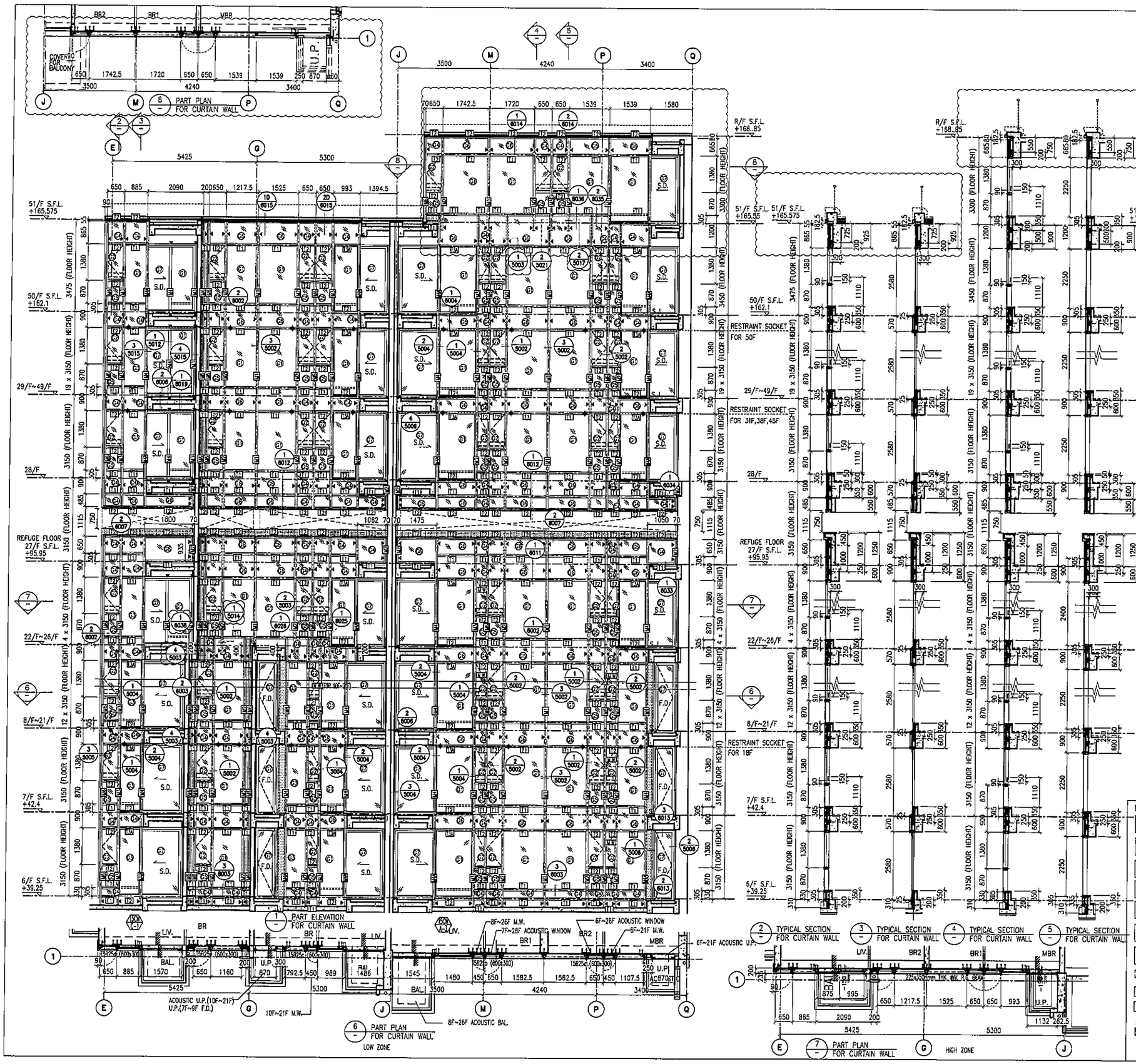

B.D. REF :

CLIENT :
信和置業有限公司
Sino Land Company Limited

ARCHITECT :
WONG TUNG & PARTNERS LIMITED
ARCHITECTS & PLANNERS

MAIN CONTRACTOR :
CR Construction Company Limited

STRUCTURAL ENGINEER :
AECOM

FACADE CONSULTANT:
AECOM

NOTE :
1. ALL DIMENSIONS ARE IN mm.
2. ALL ELEVATIONS ARE VIEWED FROM OUTSIDE.
3. ALL DIMENSIONS TO BE VERIFIED ON SITE BEFORE FABRICATION.

LEGEND :
- X1 / X001 — DETAIL MARK NO. / REFER SHEET NO.
1. F.F.L. --FINISHED FLOOR LEVEL
2. S.F.L. --STRUCTURAL FLOOR LEVEL
3. (/R) --REVERSED DETAIL

NO.	DATE	REVISED	BY
G	16/07/2019	GENERAL REVISED	
F	5/3/2019	GENERAL REVISED	
E	17/01/2019	GENERAL REVISED	
D	22/12/2018	GENERAL REVISED	
C	04/12/2018	GENERAL REVISED	
B	24/11/2018	GENERAL REVISED	
A	10/9/2018	GENERAL REVISED	

LEGEND:
- 10 mm THK. TEMPERED BLUE TINTED GLASS (OUTER) + 9 mm AIR SPACE + 8 mm THK. TEMPERED CLEAR GLASS (INNER)
- 8 mm THK. HEAT STRENGTHENED TINTED GLASS (OUTER)+ 9 mm AIR SPACE + 8 mm THK. HEAT STRENGTHENED CLEAR GLASS (INNER)
- 10 mm THK. HEAT STRENGTHENED BLUE TINTED GLASS (OUTER)+ 9 mm AIR SPACE + 8 mm THK. TEMPERED CLEAR GLASS (INNER)
- 8 mm THK. HEAT STRENGTHENED BLUE TINTED GLASS (SPANDREL GLASS)
- 8 mm THK. HEAT STRENGTHENED BLUE TINTED GLASS (OUTER)+ 9 mm AIR SPACE + 8 mm THK. TEMPERED CLEAR GLASS (INNER)
- 8 mm THK. TEMPERED BLUE TINTED GLASS (SPANDREL GLASS)
- 8 mm THK. HEAT STRENGTHENED TINTED GLASS (OUTER)+ 1.52PVB + 8 mm THK. HEAT STRENGTHENED CLEAR LAMINATED GLASS (INNER)
- 10 mm THK. TEMPERED GLASS (INTERNAL PROTECTIVE BARRIER)
- 3 mm THK. ALUM. CLADDING
- M.W. — MAINTENANCE WINDOW
- S.J. — STACK JOINT
- AE-01 — ALUM. EXTRUSION DIE NO.
- ▲ — SUPPORT POINT
- ◆ — RESTRAINT SOCKET

JOB NO. : J-837

PROJECT :
URA KWUN TONG TOWN CENTRE REDEVELOPMENT (AREA 2 & 3) AT NKIL 6514, KWUN TONG, KWLOON

TITLE :
PART ELEVATION OF CURTAIN WALL AT TOWER 5

DATE : 04-JUL-18 | SCALE : 1:60 (A1)

DRAWN BY : ASING | CHECKED BY : -

美特鋁質有限公司
MIDI ALUMINIUM FABRICATOR LTD.
Units 6-8, Sunray Industrial Centre, 1/F
610 Cha Kwo Ling Road, Kowloon
Tel:23489211-4 Fax:(852)27727666

DWG NO. : J837-CW-2512 | REV. : G

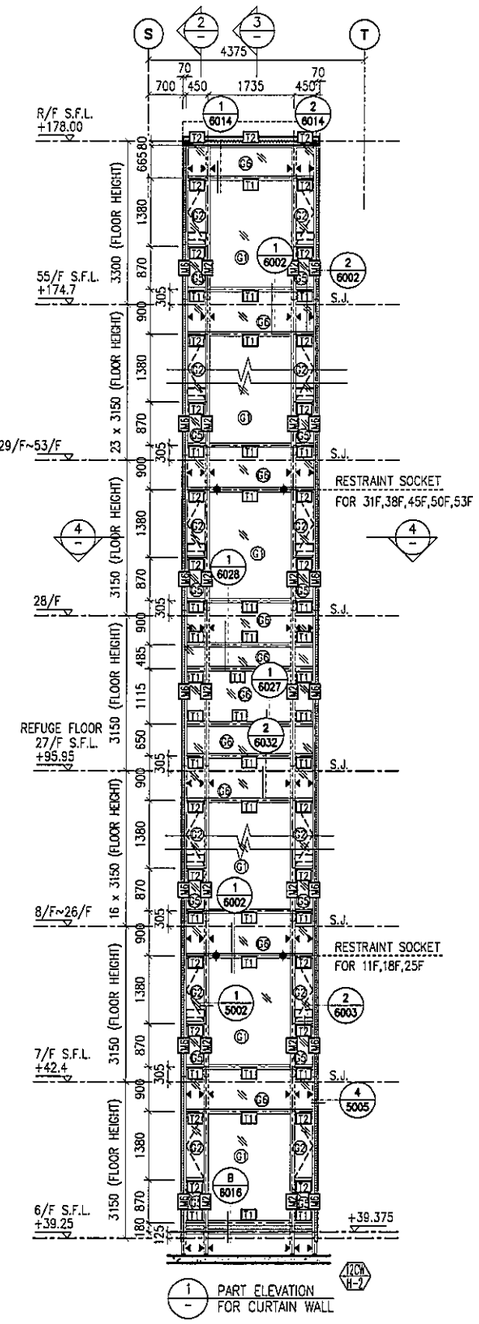

1 / – PART ELEVATION FOR CURTAIN WALL

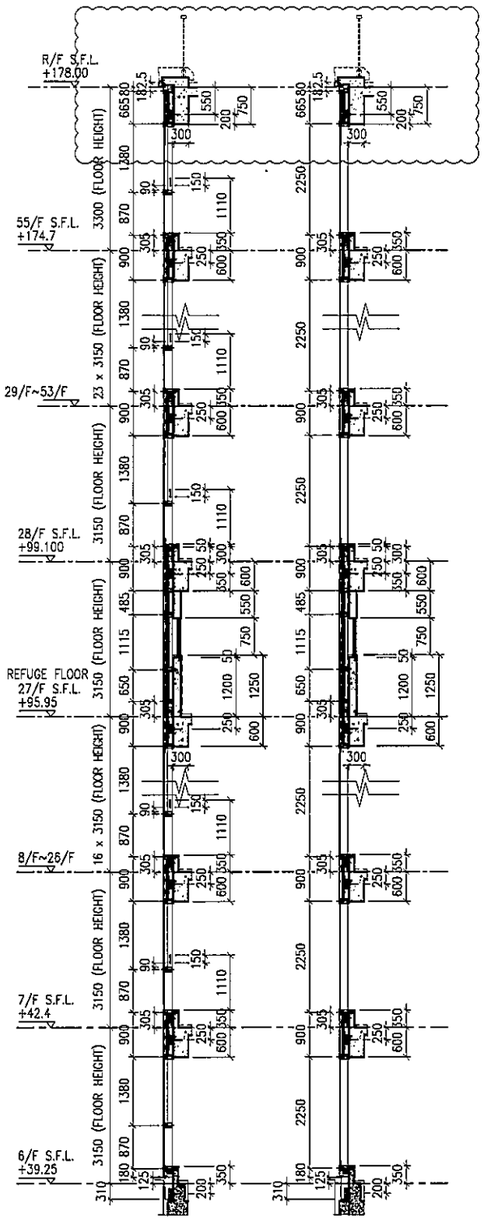

2 / – TYPICAL SECTION FOR CURTAIN WALL

3 / – TYPICAL SECTION FOR CURTAIN WALL

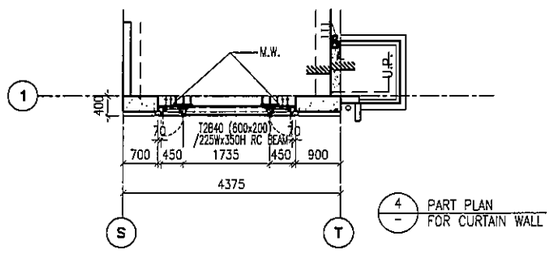

4 / – PART PLAN FOR CURTAIN WALL

LEGEND:

- 10 mm THK. TEMPERED BLUE TINTED GLASS (OUTER) + 9 mm AIR SPACE + 8 mm THK. TEMPERED CLEAR GLASS (INNER)
- 8 mm THK. HEAT STRENGTHENED TINTED GLASS (OUTER)+ 9 mm AIR SPACE + 8 mm THK. HEAT STRENGTHENED CLEAR GLASS (INNER)
- 10 mm THK. HEAT STRENGTHENED BLUE TINTED GLASS (OUTER)+ 9 mm AIR SPACE + 8 mm THK. TEMPERED CLEAR GLASS (INNER)
- 8 mm THK. HEAT STRENGTHENED BLUE TINTED GLASS (SPANDREL GLASS)
- 8 mm THK. HEAT STRENGTHENED BLUE TINTED GLASS (OUTER)+ 9 mm AIR SPACE + 8 mm THK. TEMPERED CLEAR GLASS (INNER)
- 8 mm THK. TEMPERED BLUE TINTED GLASS (SPANDREL GLASS)
- 8 mm THK. HEAT STRENGTHENED TINTED GLASS (OUTER)+ 1.52PVB + 8 mm THK. HEAT STRENGTHENED CLEAR LAMINATED GLASS (INNER) 10 mm THK. TEMPERED GLASS (INTERNAL PROTECTIVE BARRIER)
- 3 mm THK. ALUM. CLADDING
- M.W. – MAINTENANCE WINDOW
- S.J. – STACK JOINT
- AE01 – ALUM. EXTRUSION DIE NO.
- ▲ – SUPPORT POINT
- ◆ – RESTRAINT SOCKET

B.D. REF :

CLIENT :
信和置業有限公司
Sino Land Company Limited

ARCHITECT :
WONG TUNG & PARTNERS LIMITED
ARCHITECTS & PLANNERS

MAIN CONTRACTOR :
CR Construction Company Limited

STRUCTURAL ENGINEER :
AECOM

FACADE CONSULTANT:
AECOM

NOTE :
1. ALL DIMENSIONS ARE IN mm.
2. ALL ELEVATIONS ARE VIEWED FROM OUTSIDE.
3. ALL DIMENSIONS TO BE VERIFIED ON SITE BEFORE FABRICATION.

LEGEND :
X1 / X001 — DETAIL MARK NO. / REFER SHEET NO.

1. F.F.L. --FINISHED FLOOR LEVEL
2. S.F.L. --STRUCTURAL FLOOR LEVEL
3. /R --REVERSED DETAIL

NO.	DATE	REVISED	BY
F	16/07/2019	GENERAL REVISED	
E	17/01/2019	GENERAL REVISED	
D	22/12/2018	GENERAL REVISED	
C	04/12/2018	GENERAL REVISED	
B	24/11/2018	GENERAL REVISED	
A	10/9/2018	GENERAL REVISED	

JOB NO. : J-837

PROJECT :
URA KWUN TONG TOWN CENTRE REDEVELOPMENT (AREA 2 & 3) AT NKIL 6514, KWUN TONG, KWLOON

TITLE :
PART ELEVATION OF CURTAIN WALL AT TOWER 2

DATE : 04-JUL-18 | SCALE : 1:60 (A1)

DRAWN BY : ASING | CHECKED BY : –

美特鋁製有限公司
MIDI ALUMINIUM FABRICATOR LTD.
Units 6-8, Sunray Industrial Centre, 1/F
610 Cha Kwo Ling Road, Kowloon
Tel:23489211-4 Fax:(852)27727666

DWG NO. : J837-CW-2213 | REV. : F

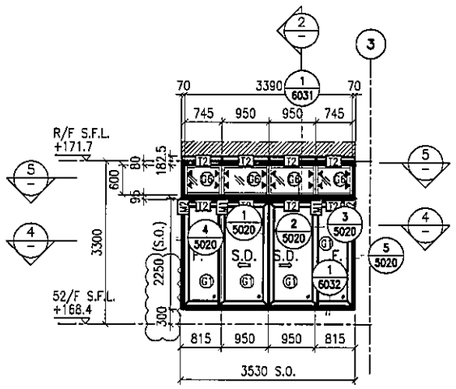

1 PART ELEVATION FOR CURTAIN WALL

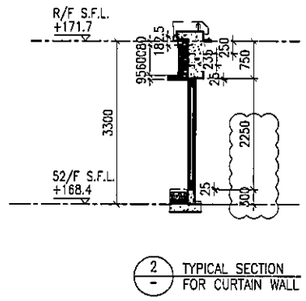

2 TYPICAL SECTION FOR CURTAIN WALL

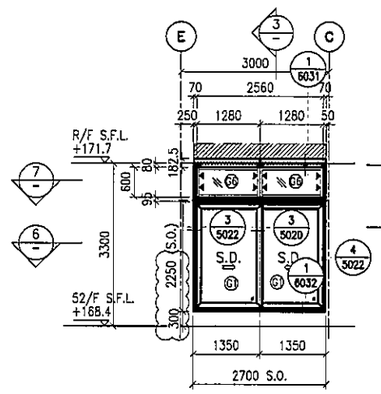

2 PART ELEVATION FOR CURTAIN WALL

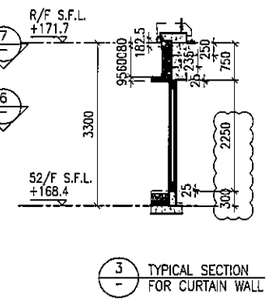

3 TYPICAL SECTION FOR CURTAIN WALL

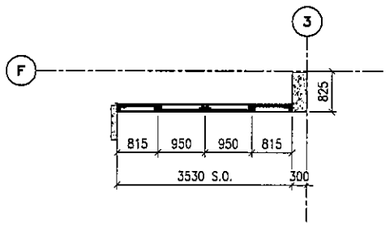

4 PART PLAN FOR CURTAIN WALL

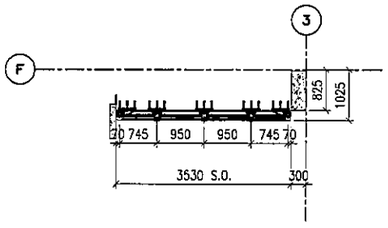

5 PART PLAN FOR CURTAIN WALL

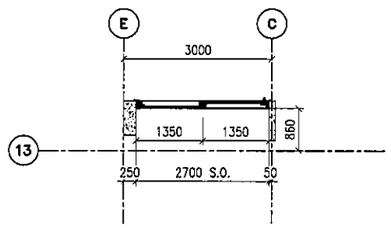

6 PART PLAN FOR CURTAIN WALL

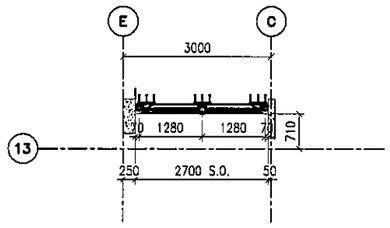

7 PART PLAN FOR CURTAIN WALL

LEGEND:

- 10 mm THK. TEMPERED BLUE TINTED GLASS (OUTER) + 9 mm AIR SPACE + 8 mm THK. TEMPERED CLEAR GLASS (INNER)
- 8 mm THK. HEAT STRENGTHENED TINTED GLASS (OUTER)+ 9 mm AIR SPACE + 8 mm THK. HEAT STRENGTHENED CLEAR GLASS (INNER)
- 10 mm THK. HEAT STRENGTHENED BLUE TINTED GLASS (OUTER)+ 9 mm AIR SPACE + 8 mm THK. TEMPERED CLEAR GLASS (INNER)
- 8 mm THK. HEAT STRENGTHENED BLUE TINTED GLASS (SPANDREL GLASS)
- 8 mm THK. HEAT STRENGTHENED BLUE TINTED GLASS (OUTER)+ 9 mm AIR SPACE + 8 mm THK. TEMPERED CLEAR GLASS (INNER)
- 8 mm THK. TEMPERED BLUE TINTED GLASS (SPANDREL GLASS)
- 8 mm THK. HEAT STRENGTHENED TINTED GLASS (OUTER)+ 1.52PVB + 8 mm THK. HEAT STRENGTHENED CLEAR LAMINATED GLASS (INNER) 10 mm THK. TEMPERED GLASS (INTERNAL PROTECTIVE BARRIER)
- 3 mm THK. ALUM. CLADDING
- M.W. – MAINTENANCE WINDOW
- S.J. – STACK JOINT
- AE-01 – ALUM. EXTRUSION DIE NO.
- ▲ – SUPPORT POINT
- ✦ – RESTRAINT SOCKET

B.D. REF :

CLIENT :
信和置業有限公司
Sino Land Company Limited

ARCHITECT :
WONG TUNG & PARTNERS LIMITED
ARCHITECTS & PLANNERS

MAIN CONTRACTOR :
CR Construction Company Limited

STRUCTURAL ENGINEER :
AECOM

FACADE CONSULTANT:
AECOM

NOTE :
1. ALL DIMENSIONS ARE IN mm.
2. ALL ELEVATIONS ARE VIEWED FROM OUTSIDE.
3. ALL DIMENSIONS TO BE VERIFIED ON SITE BEFORE FABRICATION.

LEGEND :
X1 / X001 — DETAIL MARK NO. / REFER SHEET NO.
1. F.F.L. --FINISHED FLOOR LEVEL
2. S.F.L. --STRUCTURAL FLOOR LEVEL
3. /R --REVERSED DETAIL

NO.	DATE	REVISED	BY

JOB NO. : J-837

PROJECT :
URA KWUN TONG TOWN CENTRE REDEVELOPMENT (AREA 2 & 3) AT NKIL 6514, KWUN TONG, KWLOON

TITLE :
PART ELEVATION OF CURTAIN WALL AT TOWER 3

DATE : 30-JUN-19	SCALE : 1:60 (A1)
DRAWN BY : ASING	CHECKED BY : -

美特鋁質有限公司
MIDI ALUMINIUM FABRICATOR LTD.
Units 6-8, Sunray Industrial Centre, 1/F
610 Cha Kwo Ling Road, Kowloon
Tel:23489211-4 Fax:(852)27727666

DWG NO. : J837-CW-2313 REV. : -

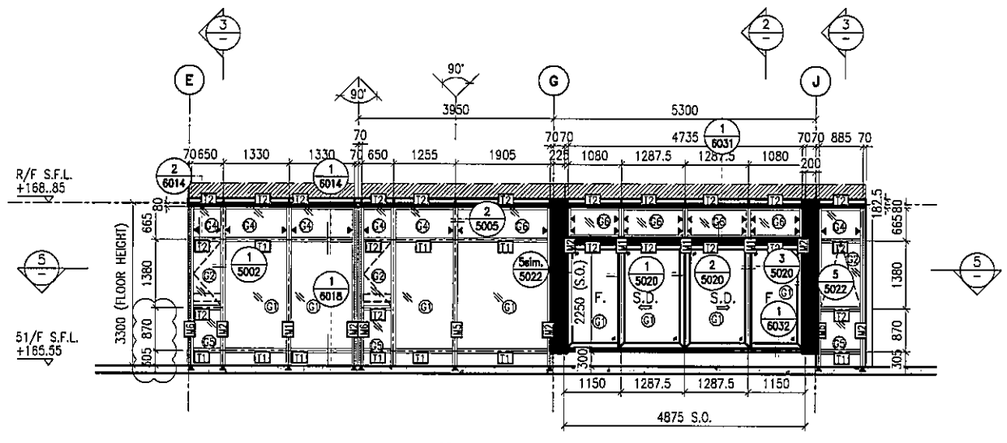

1 PART ELEVATION FOR CURTAIN WALL

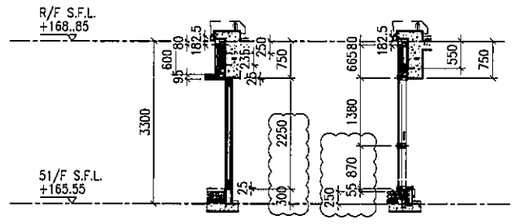

2 TYPICAL SECTION FOR CURTAIN WALL

3 TYPICAL SECTION FOR CURTAIN WALL

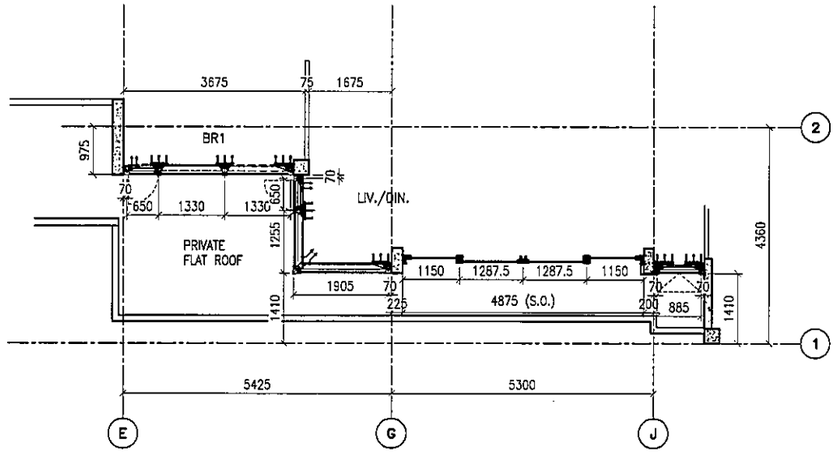

5 PART PLAN FOR CURTAIN WALL

LEGEND:

- G1 – 10 mm THK. TEMPERED BLUE TINTED GLASS (OUTER) + 9 mm AIR SPACE + 8 mm THK. TEMPERED CLEAR GLASS (INNER)
- G2 – 8 mm THK. HEAT STRENGTHENED TINTED GLASS (OUTER)+ 9 mm AIR SPACE + 8 mm THK. HEAT STRENGTHENED CLEAR GLASS (INNER)
- G3 – 10 mm THK. HEAT STRENGTHENED BLUE TINTED GLASS (OUTER)+ 9 mm AIR SPACE + 8 mm THK. TEMPERED CLEAR GLASS (INNER)
- G4 – 8 mm THK. HEAT STRENGTHENED BLUE TINTED GLASS (SPANDREL GLASS)
- G5 – 8 mm THK. HEAT STRENGTHENED BLUE TINTED GLASS (OUTER)+ 9 mm AIR SPACE + 8 mm THK. TEMPERED CLEAR GLASS (INNER)
- G6 – 8 mm THK. TEMPERED BLUE TINTED GLASS (SPANDREL GLASS)
- G7 – 8 mm THK. HEAT STRENGTHENED TINTED GLASS (OUTER)+ 1.52PVB + 8 mm THK. HEAT STRENGTHENED CLEAR LAMINATED GLASS (INNER)
- 10 mm THK. TEMPERED GLASS (INTERNAL PROTECTIVE BARRIER)
- 3 mm THK. ALUM. CLADDING
- M.W. – MAINTENANCE WINDOW
- S.J. – STACK JOINT
- A601 – ALUM. EXTRUSION DIE NO.
- ▲ – SUPPORT POINT
- ◆ – RESTRAINT SOCKET

B.D. REF :

CLIENT :
信和置業有限公司
Sino Land Company Limited

ARCHITECT :
WONG TUNG & PARTNERS LIMITED
ARCHITECTS & PLANNERS

MAIN CONTRACTOR :
CR Construction Company Limited

STRUCTURAL ENGINEER :
AECOM

FACADE CONSULTANT:
AECOM

NOTE :
1. ALL DIMENSIONS ARE IN mm.
2. ALL ELEVATIONS ARE VIEWED FROM OUTSIDE.
3. ALL DIMENSIONS TO BE VERIFIED ON SITE BEFORE FABRICATION.

LEGEND :
- X1 / X001 — DETAIL MARK NO. / REFER SHEET NO.
1. F.F.L. --FINISHED FLOOR LEVEL
2. S.F.L. --STRUCTURAL FLOOR LEVEL
3. /R --REVERSED DETAIL

NO.	DATE	REVISED	BY
C	16/07/2019	GENERAL REVISED	
B	23/05/2019	GENERAL REVISED	
A	07/04/2019	GENERAL REVISED	

JOB NO. : J-837

PROJECT :
URA KWUN TONG TOWN CENTRE REDEVELOPMENT (AREA 2 & 3) AT NKIL 6514, KWUN TONG, KWLOON

TITLE :
PART ELEVATION OF CURTAIN WALL AT TOWER 5

DATE : 22-DEC-18 | SCALE : 1:60 (A1)

DRAWN BY : ASING | CHECKED BY : –

美特鋁質有限公司
MIDI ALUMINIUM FABRICATOR LTD.
Units 6-8, Sunray Industrial Centre, 1/F
610 Cha Kwo Ling Road, Kowloon
Tel:23489211-4 Fax:(852)27727666

DWG NO. : J837-CW-2513 | REV. : C

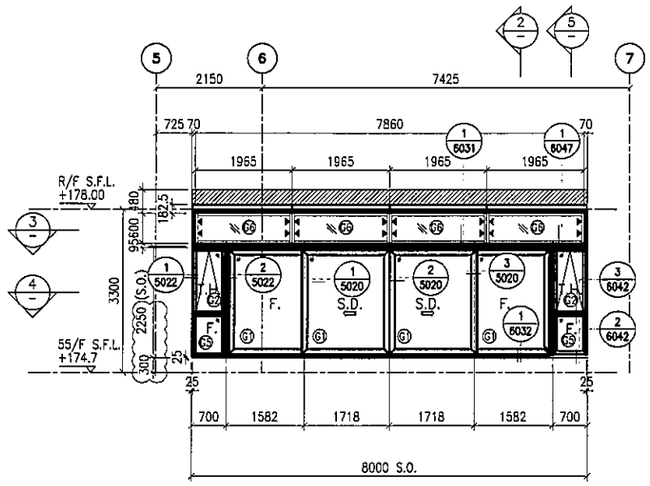

1 / – PART ELEVATION FOR CURTAIN WALL

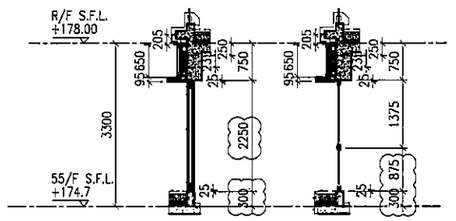

2 / – TYPICAL SECTION FOR CURTAIN WALL

5 / – TYPICAL SECTION FOR CURTAIN WALL

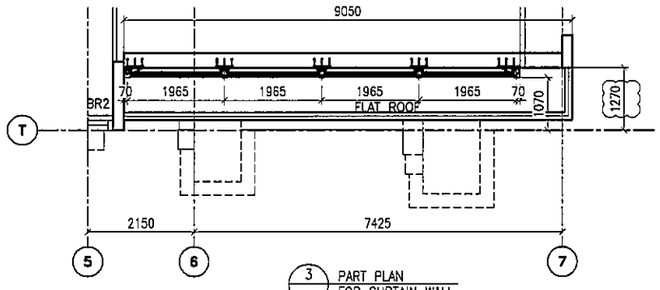

3 / – PART PLAN FOR CURTAIN WALL

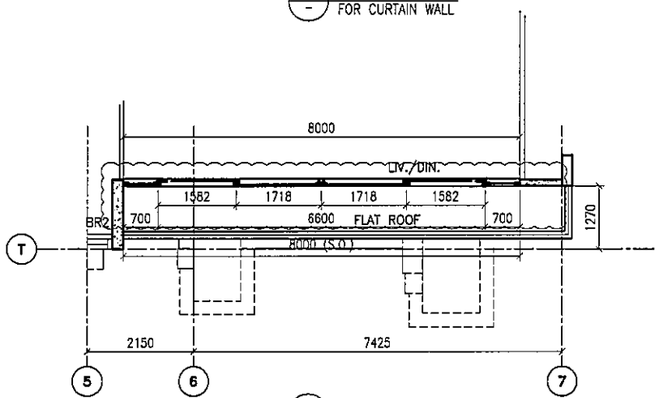

4 / – PART PLAN FOR CURTAIN WALL

LEGEND:

- 10 mm THK. TEMPERED BLUE TINTED GLASS (OUTER) + 9 mm AIR SPACE + 8 mm THK. TEMPERED CLEAR GLASS (INNER)
- 8 mm THK. HEAT STRENGTHENED TINTED GLASS (OUTER)+ 9 mm AIR SPACE + 8 mm THK. HEAT STRENGTHENED CLEAR GLASS (INNER)
- 10 mm THK. HEAT STRENGTHENED BLUE TINTED GLASS (OUTER)+ 9 mm AIR SPACE + 8 mm THK. TEMPERED CLEAR GLASS (INNER)
- 8 mm THK. HEAT STRENGTHENED BLUE TINTED GLASS (SPANDREL GLASS)
- 8 mm THK. HEAT STRENGTHENED BLUE TINTED GLASS (OUTER)+ 9 mm AIR SPACE + 8 mm THK. TEMPERED CLEAR GLASS (INNER)
- 8 mm THK. TEMPERED BLUE TINTED GLASS (SPANDREL GLASS)
- 8 mm THK. HEAT STRENGTHENED TINTED GLASS (OUTER)+ 1.52PVB + 8 mm THK. HEAT STRENGTHENED CLEAR LAMINATED GLASS (INNER)
- 10 mm THK. TEMPERED GLASS (INTERNAL PROTECTIVE BARRIER)
- 3 mm THK. ALUM. CLADDING
- M.W. – MAINTENANCE WINDOW
- S.J. – STACK JOINT
- AE01 – ALUM. EXTRUSION DIE NO.
- ▲ – SUPPORT POINT
- ✦ – RESTRAINT SOCKET

B.D. REF :

CLIENT :
信和置業有限公司
Sino Land Company Limited

ARCHITECT : WONG TUNG & PARTNERS LIMITED
ARCHITECTS & PLANNERS

MAIN CONTRACTOR :
CR Construction Company Limited

STRUCTURAL ENGINEER :
AECOM

FACADE CONSULTANT:
AECOM

NOTE :
1. ALL DIMENSIONS ARE IN mm.
2. ALL ELEVATIONS ARE VIEWED FROM OUTSIDE.
3. ALL DIMENSIONS TO BE VERIFIED ON SITE BEFORE FABRICATION.

LEGEND :
X1 / X001 — DETAIL MARK NO. / REFER SHEET NO.
1. F.F.L. --FINISHED FLOOR LEVEL
2. S.F.L. --STRUCTURAL FLOOR LEVEL
3. /R --REVERSED DETAIL

NO.	DATE	REVISED	BY
C	16/07/2019	GENERAL REVISED	
B	26/05/2019	GENERAL REVISED	
A	16/05/2019	GENERAL REVISED	

JOB NO. : J-837

PROJECT :
URA KWUN TONG TOWN CENTRE REDEVELOPMENT (AREA 2 & 3) AT NKIL 6514, KWUN TONG, KWLOON

TITLE :
PART ELEVATION OF CURTAIN WALL AT TOWER 2

DATE : 18-FEB-19 | SCALE : 1:60 (A1)

DRAWN BY : ASING | CHECKED BY : –

美特鋁質有限公司
MIDI ALUMINIUM FABRICATOR LTD.
Units 6-8, Sunray Industrial Centre, 1/F
610 Cha Kwo Ling Road, Kowloon
Tel:23489211-4 Fax:(852)27727666

DWG NO. : J837-CW-2214 | REV. : C

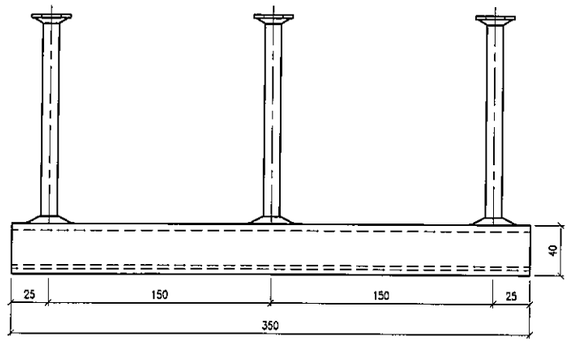

SECTION 'A-A'
HILTI CHANNEL HAC-70

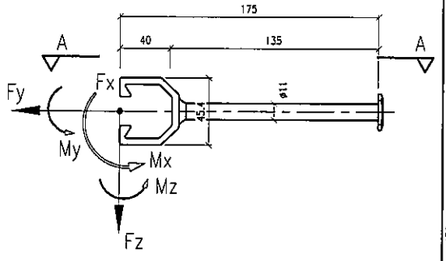

MAX. UNFACTORED LOAD:

	WL	DL
Fx (kN)	0	0
Fy (kN)	23.5	0
Fz (kN)	0	3.5
Mx (kNm)	0.6	0.6
My (kNm)	0	0
Mz (kNm)	0	0

EMBED TYPE : E01

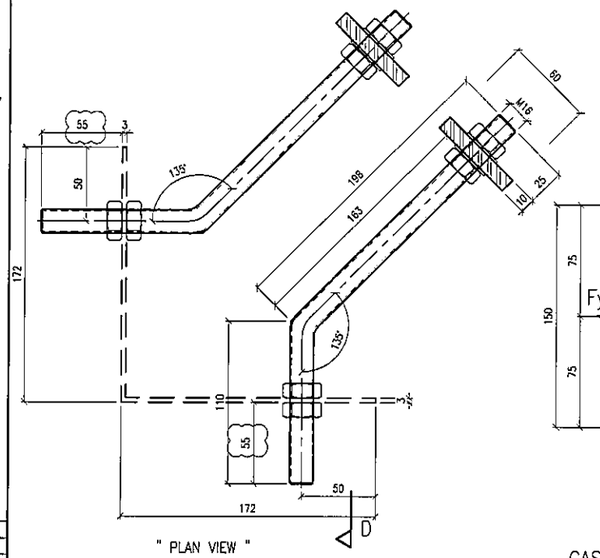

" PLAN VIEW "

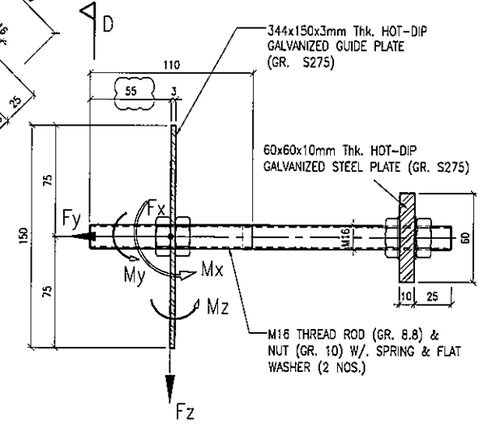

SECTION 'D-D'
CAST-IN HOLDING DOWN BOLT

MAX. UNFACTORED LOAD:

	WL	DL
Fx (kN)	6.76	0
Fy (kN)	6.76	0
Fz (kN)	0	1.75
Mx (kNm)	0	0
My (kNm)	0	0
Mz (kNm)	0	0

EMBED TYPE : E04

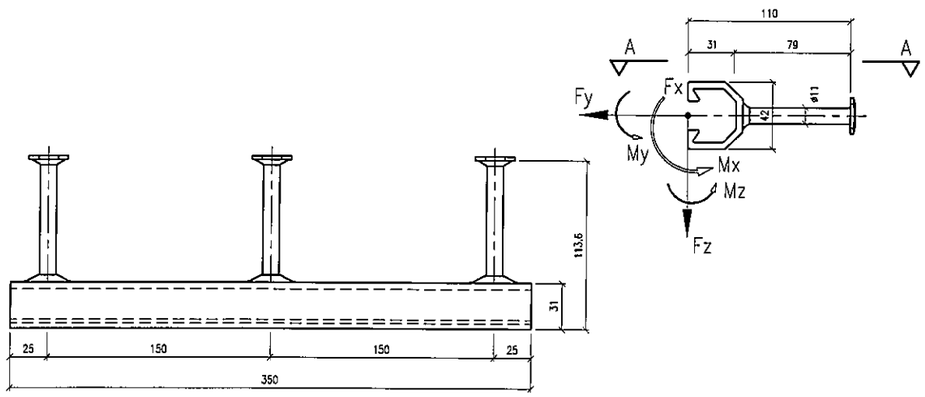

SECTION 'A-A'
HILTI CHANNEL HAC-50

MAX. UNFACTORED LOAD:

	WL	DL
Fx (kN)		
Fy (kN)		
Fz (kN)		
Mx (kNm)		
My (kNm)		
Mz (kNm)		

EMBED TYPE : E02

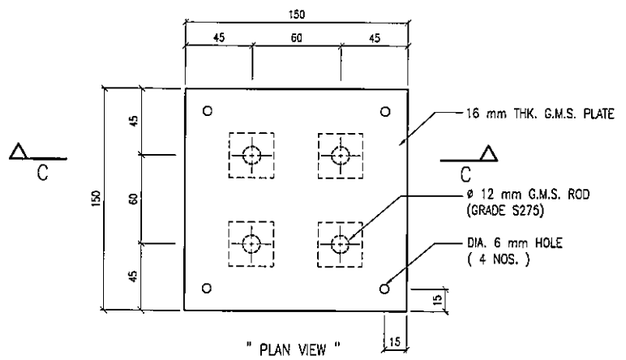

" PLAN VIEW "

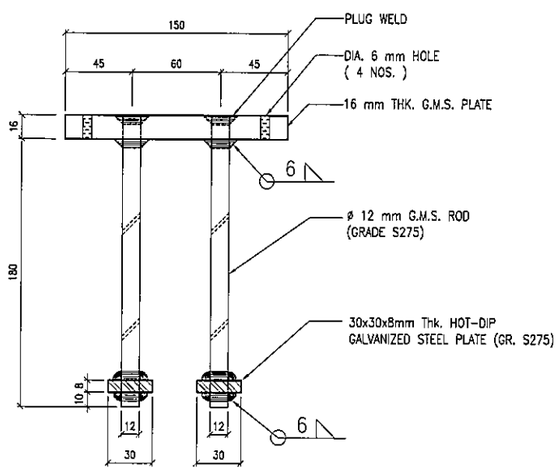

SECTION 'C-C'

" CAST IN EMBED DETAILED DIMENSION "

EMBED TYPE : E03

B.D. REF :

CLIENT :
信和置業有限公司
Sino Land Company Limited

ARCHITECT :
WONG TUNG & PARTNERS LIMITED
ARCHITECTS & PLANNERS

MAIN CONTRACTOR :
CR Construction Company Limited

STRUCTURAL ENGINEER :
AECOM

FACADE CONSULTANT:
AECOM

NOTE :
1. ALL DIMENSIONS ARE IN mm.
2. ALL ELEVATIONS ARE VIEWED FROM OUTSIDE.
3. ALL DIMENSIONS TO BE VERIFIED ON SITE BEFORE FABRICATION.

LEGEND :
X1 / X001 — DETAIL MARK NO. / REFER SHEET NO.
1. F.F.L. --FINISHED FLOOR LEVEL
2. S.F.L. --STRUCTURAL FLOOR LEVEL
3. /R --REVERSED DETAIL

NO.	DATE	REVISED	BY
A	10/9/2018	GENERAL REVISED	

JOB NO. : J-837

PROJECT :
URA KWUN TONG TOWN CENTRE REDEVELOPMENT (AREA 2 & 3) AT NKIL 6514, KWUN TONG, KWLOON

TITLE :
CAST IN CHANNEL & EMBED TYPICAL DETAILS FOR CURTAIN WALL

DATE : 04-JUL-18 | SCALE : 1:2 (A1)

DRAWN BY : ASING | CHECKED BY : -

美特鋁製有限公司
MIDI ALUMINIUM FABRICATOR LTD.
Units 6-8, Sunray Industrial Centre, 1/F
610 Cha Kwo Ling Road, Kowloon
Tel:23489211-4 Fax:(852)27727666

DWG NO. : J837-CW-ED01 | REV. : A

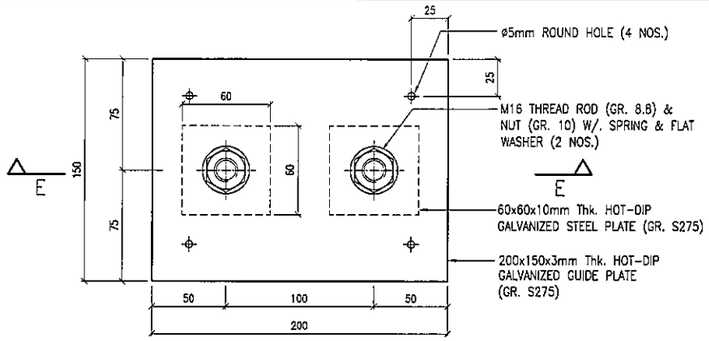

" PLAN VIEW "

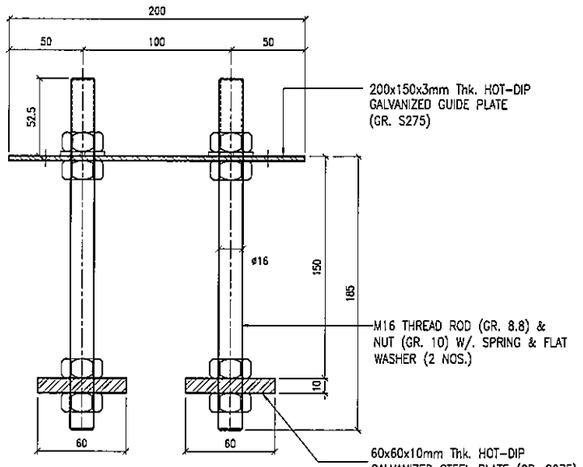

SECTION 'E-E'

CAST-IN HOLDING DOWN BOLT

EMBED TYPE : E05

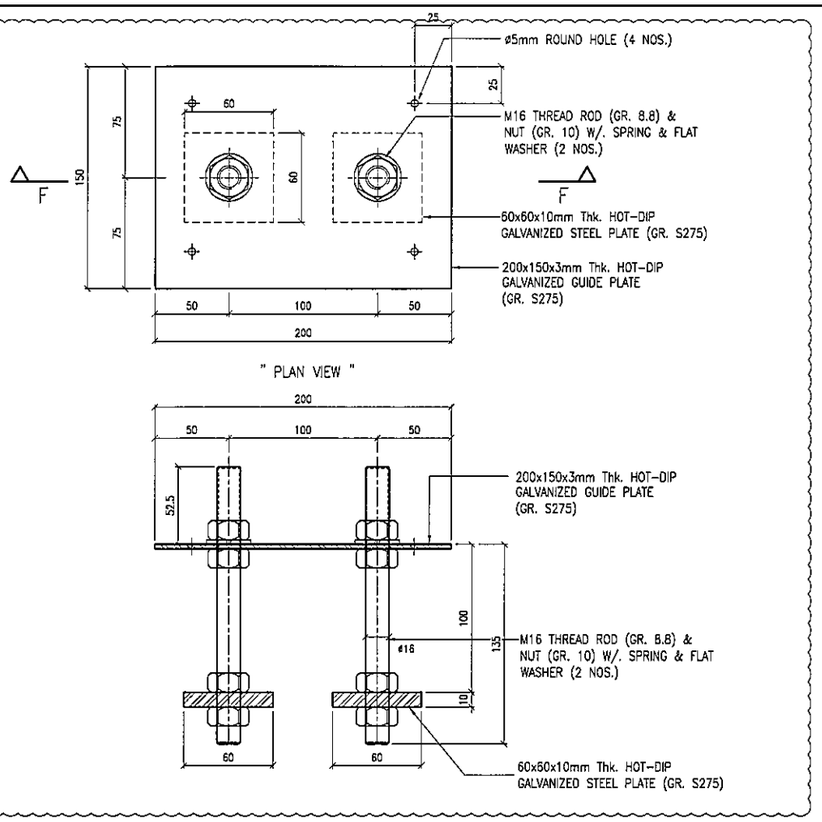

" PLAN VIEW "

SECTION 'F-F'

CAST-IN HOLDING DOWN BOLT

EMBED TYPE : E06

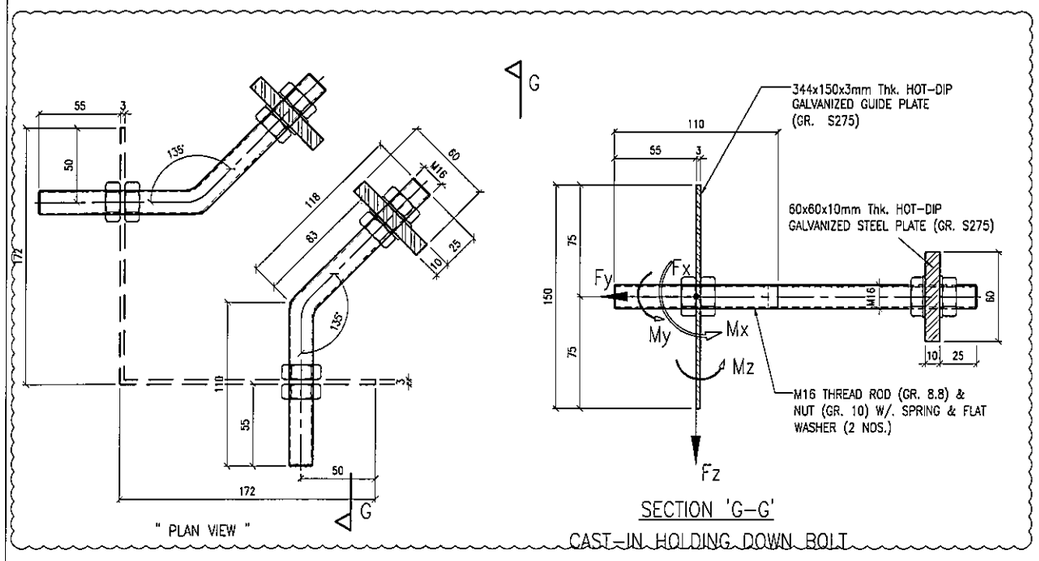

SECTION 'G-G'

CAST-IN HOLDING DOWN BOLT

EMBED TYPE : E07

B.D. REF :

CLIENT :
信和置業有限公司
Sino Land Company Limited

ARCHITECT :
WONG TUNG & PARTNERS LIMITED
ARCHITECTS & PLANNERS

MAIN CONTRACTOR :
CR Construction Company Limited

STRUCTURAL ENGINEER :
AECOM

FACADE CONSULTANT:
AECOM

NOTE :
1. ALL DIMENSIONS ARE IN mm.
2. ALL ELEVATIONS ARE VIEWED FROM OUTSIDE.
3. ALL DIMENSIONS TO BE VERIFIED ON SITE BEFORE FABRICATION.

LEGEND :
X1 — DETAIL MARK NO.
X001 — REFER SHEET NO.

1. F.F.L. --FINISHED FLOOR LEVEL
2. S.F.L. --STRUCTURAL FLOOR LEVEL
3. (/R) --REVERSED DETAIL

NO.	DATE	REVISED	BY
A	10/9/2018	GENERAL REVISED	

JOB NO. : J-837

PROJECT :
URA KWUN TONG TOWN CENTRE
REDEVELOPMENT (AREA 2 & 3) AT
NKIL 6514, KWUN TONG, KWLOON

TITLE :
CAST IN CHANNEL &
EMBED TYPICAL DETAILS
FOR CURTAIN WALL

DATE : 04-JUL-18 | SCALE : 1:2 (A1)

DRAWN BY : ASING | CHECKED BY : -

美特鋁質有限公司
MIDI ALUMINIUM FABRICATOR LTD.
Units 6-8, Sunray Industrial Centre, 1/F
610 Cha Kwo Ling Road, Kowloon
Tel:23489211-4 Fax:(852)27727666

DWG NO. : J837-CW-ED02 | REV. : A

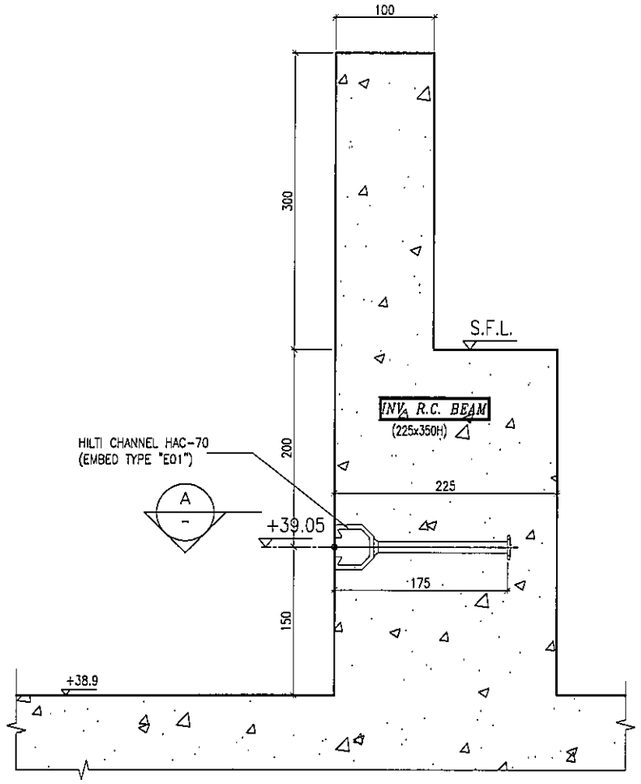

S01 EMBED INSTALLATION DETAIL
SECTION TYPE "S01"

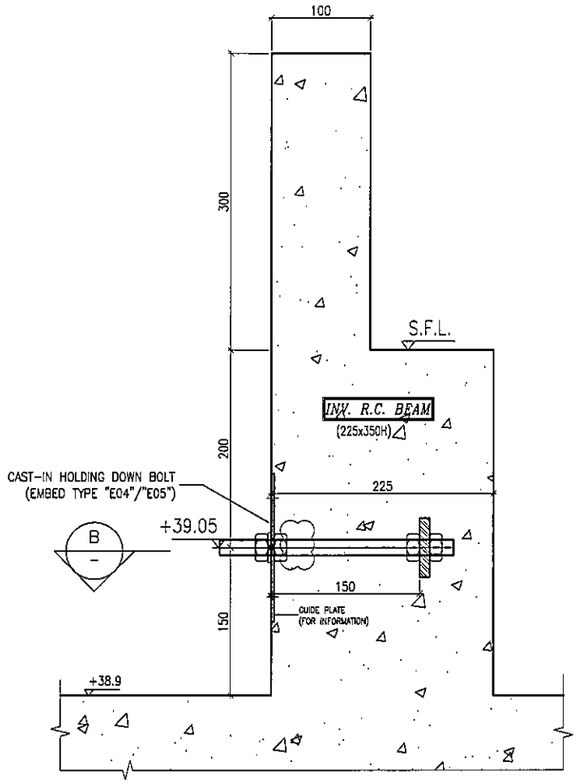

S02 EMBED INSTALLATION DETAIL
SECTION TYPE "S02"

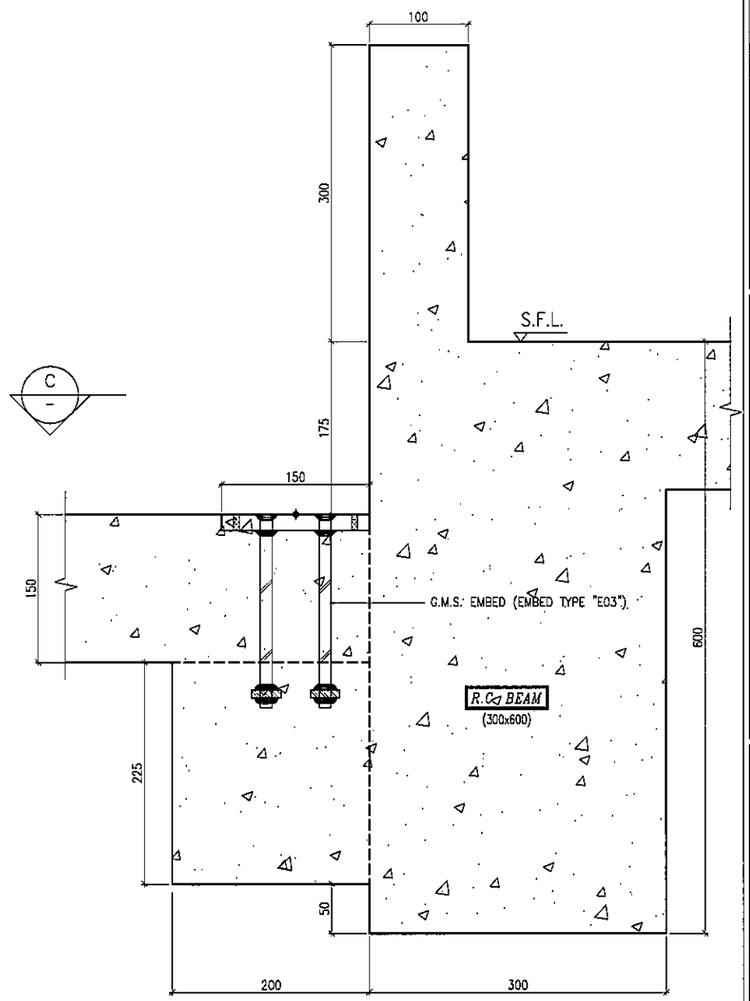

S03 EMBED INSTALLATION DETAIL
SECTION TYPE "S03"

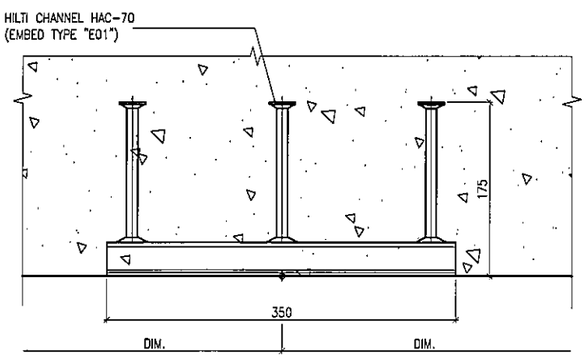

SECTION 'A'

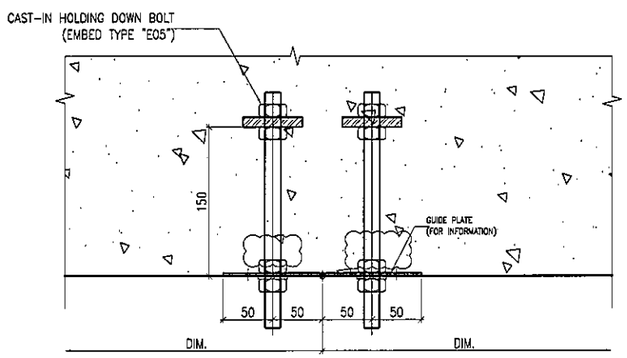

SECTION 'B'

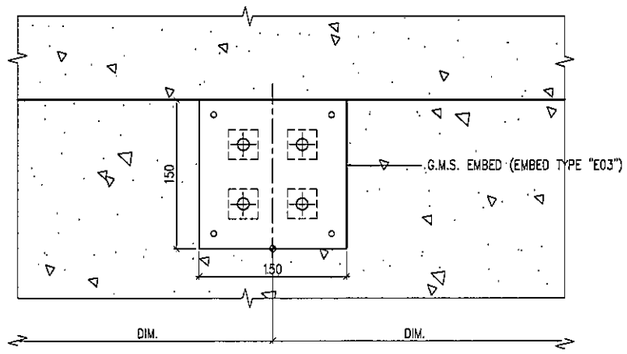

SECTION 'C'

B.O. REF :

CLIENT :
信和置業有限公司
Sino Land Company Limited

ARCHITECT :
WONG TUNG & PARTNERS LIMITED
ARCHITECTS & PLANNERS

MAIN CONTRACTOR :
CR Construction Company Limited

STRUCTURAL ENGINEER :
AECOM

FACADE CONSULTANT:
AECOM

NOTE :
1. ALL DIMENSIONS ARE IN mm.
2. ALL ELEVATIONS ARE VIEWED FROM OUTSIDE.
3. ALL DIMENSIONS TO BE VERIFIED ON SITE BEFORE FABRICATION.

LEGEND :
X1 — DETAIL MARK NO.
X001 — REFER SHEET NO.
1. F.F.L. --FINISHED FLOOR LEVEL
2. S.F.L. --STRUCTURAL FLOOR LEVEL
3. /R --REVERSED DETAIL

NO.	DATE	REVISED	BY
B	24/11/2018	GENERAL REVISED	
A	10/9/2018	GENERAL REVISED	

JOB NO. : J-837

PROJECT :
URA KWUN TONG TOWN CENTRE
REDEVELOPMENT (AREA 2 & 3) AT
NKIL 6514, KWUN TONG, KWLOON

TITLE :
EMBED TYPICAL DETAILS
FOR CURTAIN WALL

DATE : 13-JUL-18 | SCALE : 1:3 (A1)

DRAWN BY : Asing | CHECKED BY : -

美特鋁質有限公司
MIDI ALUMINIUM FABRICATOR LTD.
Units 6-8, Sunray Industrial Centre, 1/F
610 Cha Kwo Ling Road, Kowloon
Tel:23489211-4 Fax:(852)27727666

DWG NO. : J837-CW-ED03 | REV. : B

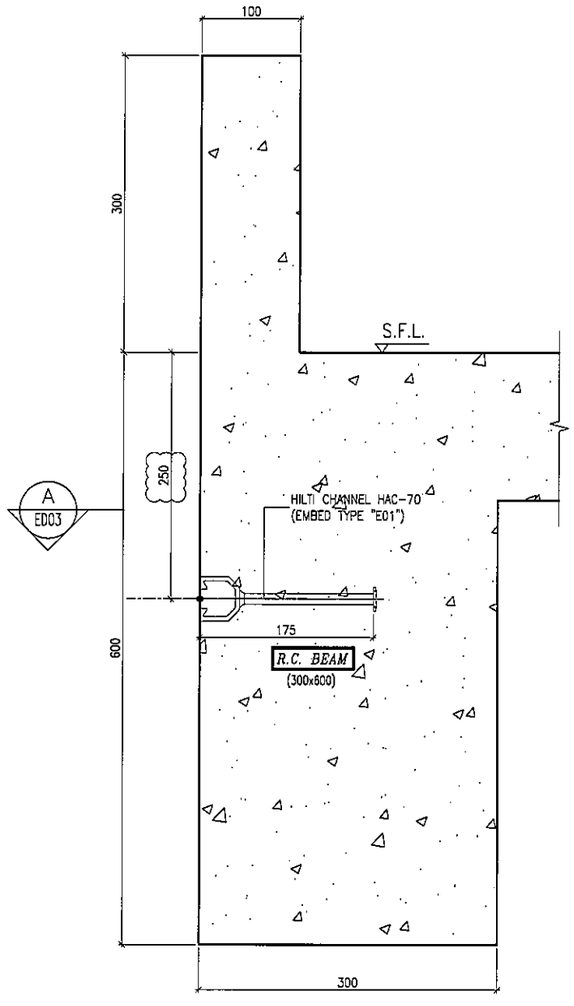

S04 EMBED INSTALLATION DETAIL
– SECTION TYPE "S04"

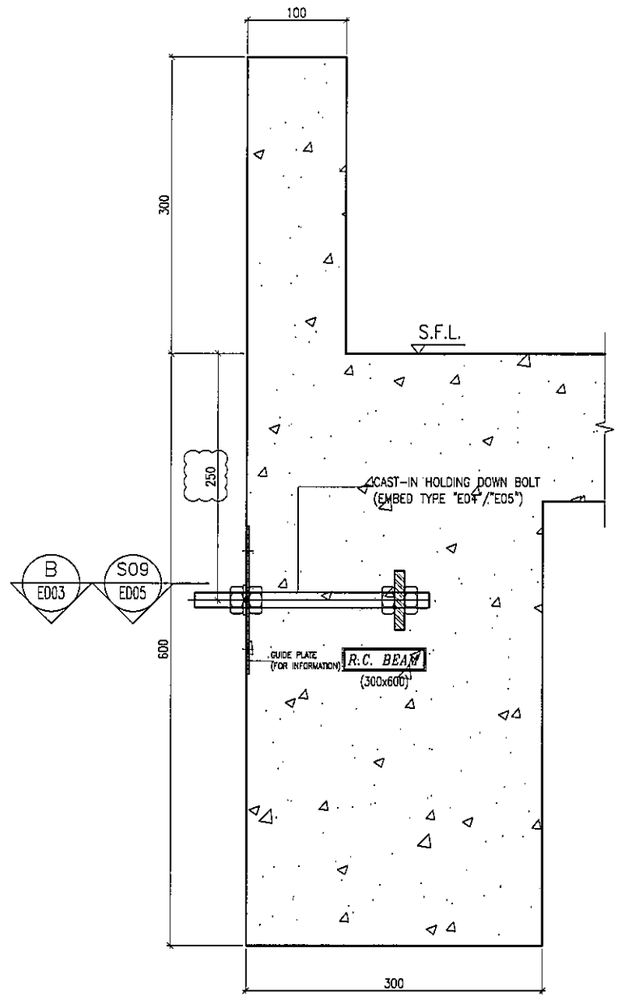

S05 EMBED INSTALLATION DETAIL
– SECTION TYPE "S05"

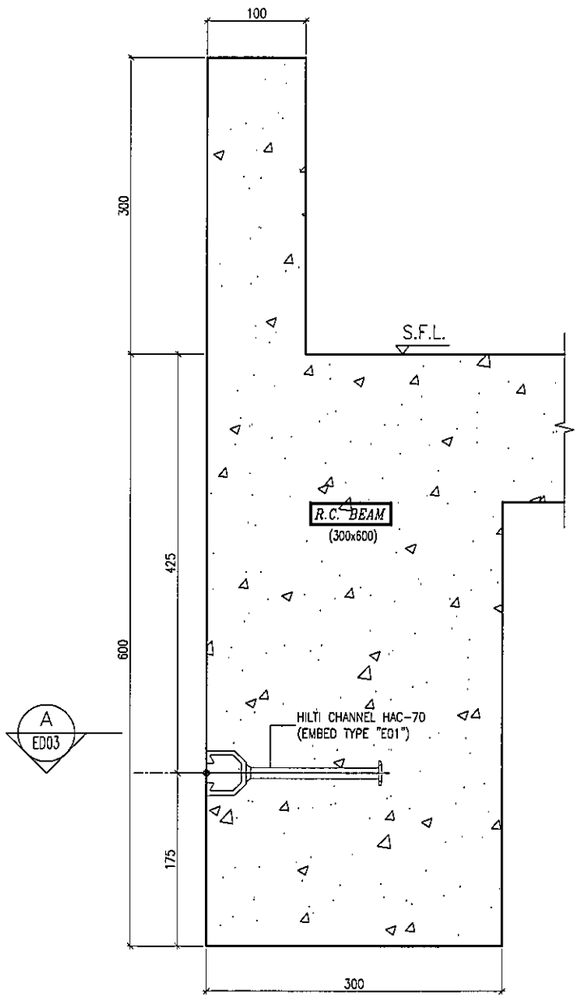

S06 EMBED INSTALLATION DETAIL
– SECTION TYPE "S06"

B.D. REF :

CLIENT :
信和置業有限公司
Sino Land Company Limited

ARCHITECT :
WONG TUNG & PARTNERS LIMITED
ARCHITECTS & PLANNERS

MAIN CONTRACTOR :
CR Construction Company Limited

STRUCTURAL ENGINEER :
AECOM

FACADE CONSULTANT:
AECOM

NOTE :
1. ALL DIMENSIONS ARE IN mm.
2. ALL ELEVATIONS ARE VIEWED FROM OUTSIDE.
3. ALL DIMENSIONS TO BE VERIFIED ON SITE BEFORE FABRICATION.

LEGEND :
X1 / X001 — DETAIL MARK NO. / REFER SHEET NO.
1. F.F.L. --FINISHED FLOOR LEVEL
2. S.F.L. --STRUCTURAL FLOOR LEVEL
3. /R --REVERSED DETAIL

NO.	DATE	REVISED	BY
B	04/12/2018	GENERAL REVISED	
A	24/11/2018	GENERAL REVISED	

JOB NO. : J-837

PROJECT :
URA KWUN TONG TOWN CENTRE
REDEVELOPMENT (AREA 2 & 3) AT
NKIL 6514, KWUN TONG, KWLOON

TITLE :
EMBED TYPICAL DETAILS
FOR CURTAIN WALL

DATE : 13-JUL-18 | SCALE : 1:3 (A1)

DRAWN BY : Asing | CHECKED BY : –

美特鋁質有限公司
MIDI ALUMINIUM FABRICATOR LTD.
Units 6-8, Sunray Industrial Centre, 1/F
610 Cha Kwo Ling Road, Kowloon
Tel:23489211-4 Fax:(852)27727666

DWG NO. : J837-CW-ED04 | REV. : B

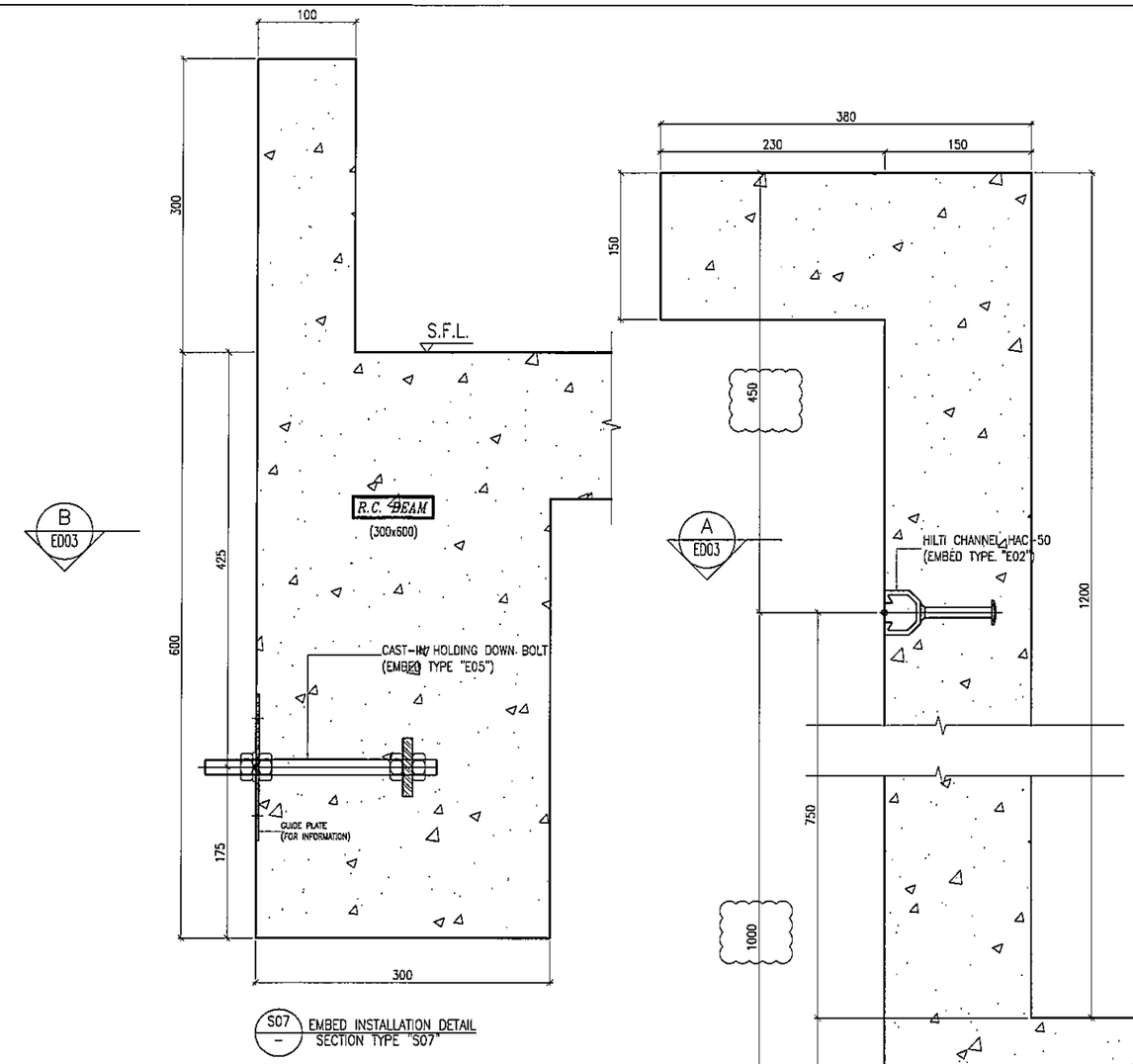

S07 EMBED INSTALLATION DETAIL
– SECTION TYPE "S07"

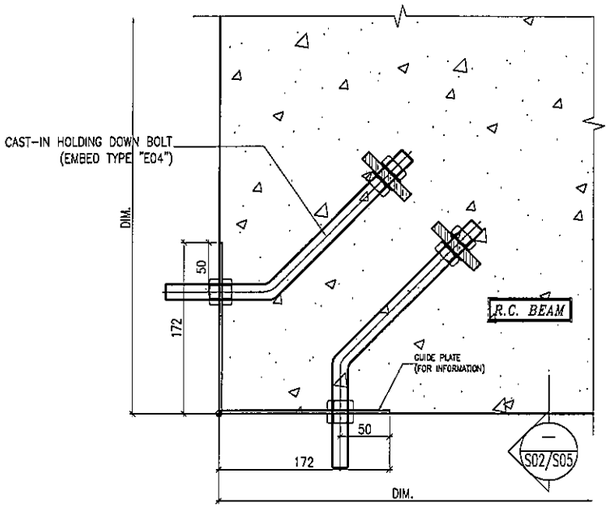

S09 EMBED INSTALLATION DETAIL
– SECTION TYPE "S09"

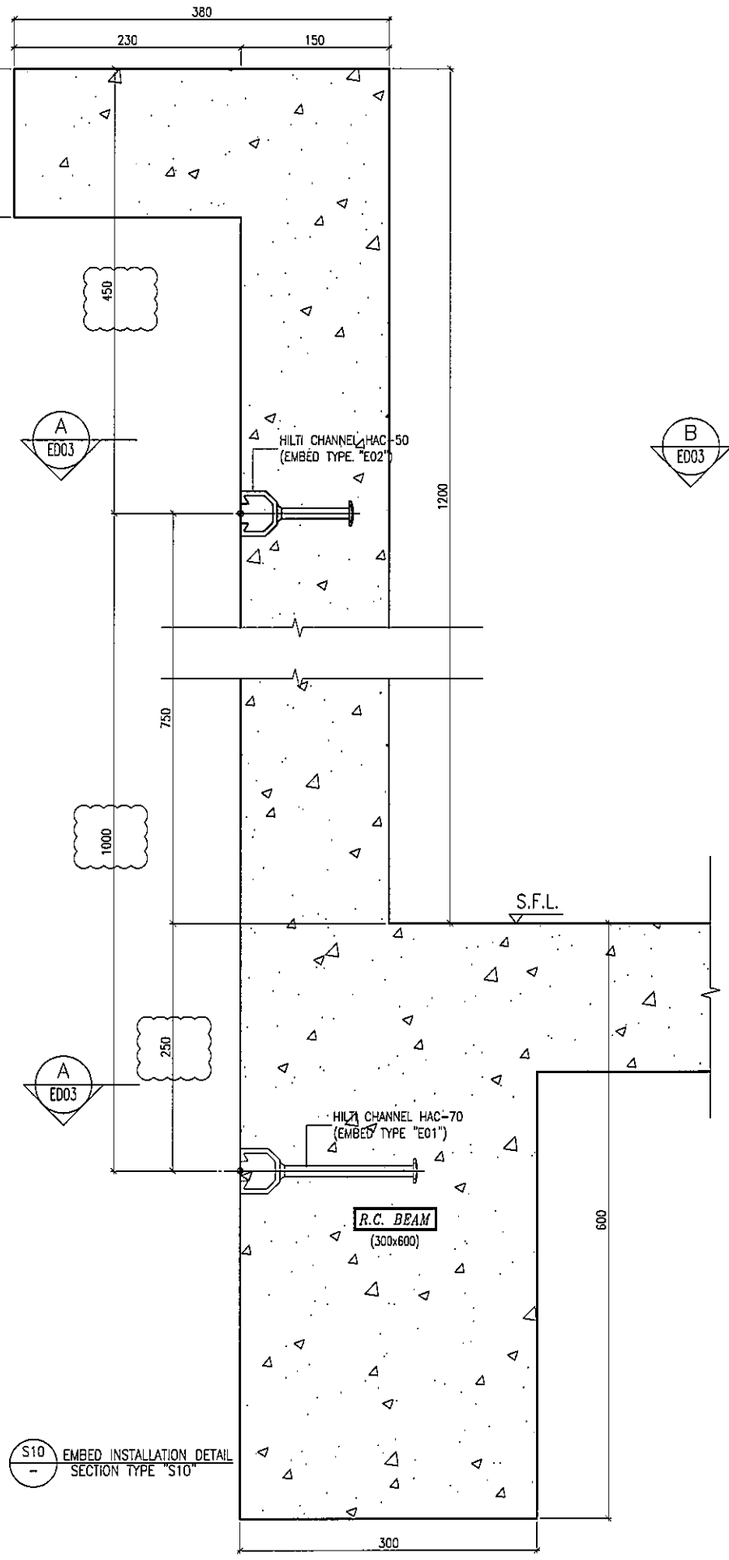

S10 EMBED INSTALLATION DETAIL
– SECTION TYPE "S10"

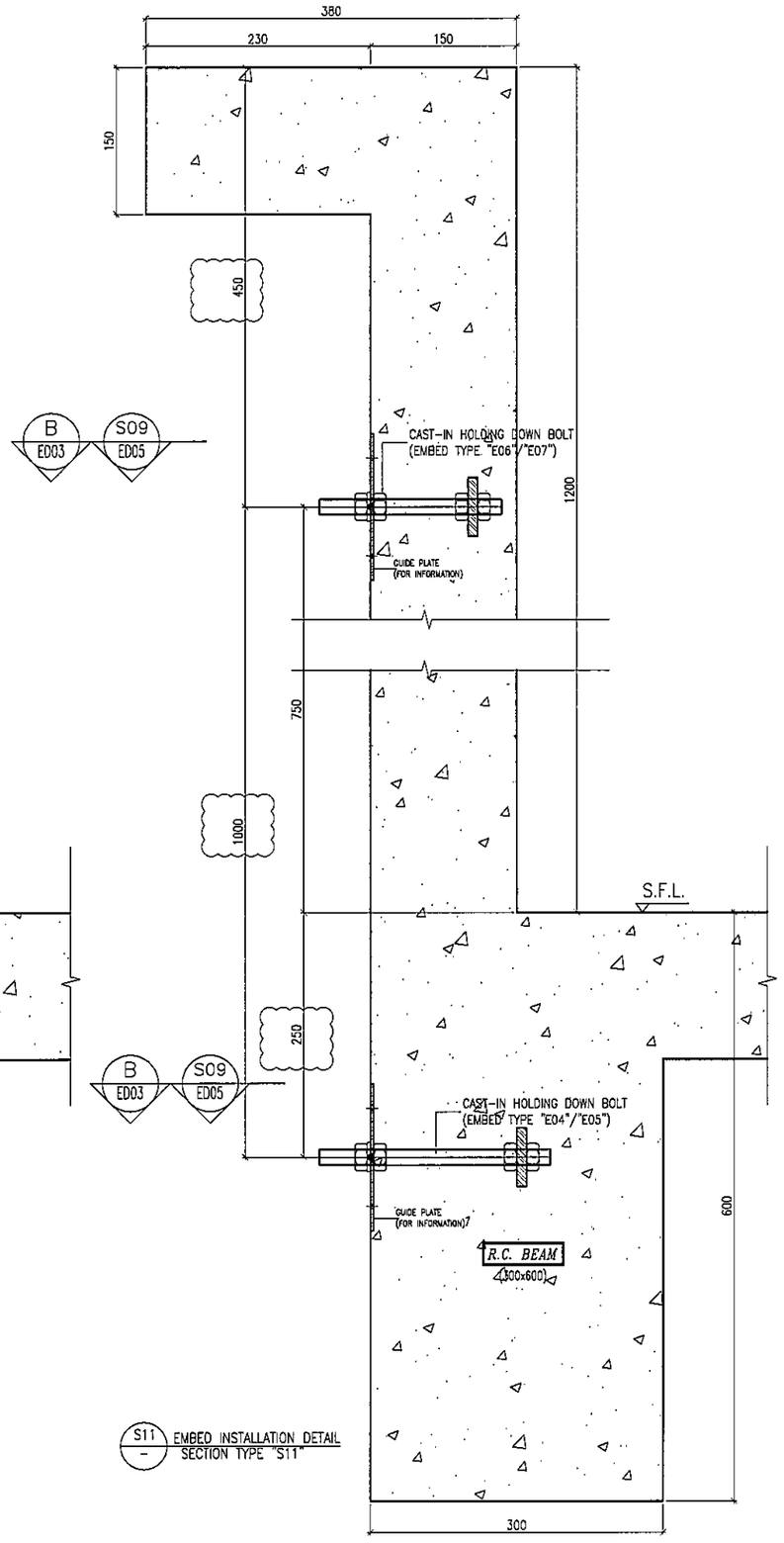

S11 EMBED INSTALLATION DETAIL
– SECTION TYPE "S11"

B.D. REF :

CLIENT :
信和置業有限公司
Sino Land Company Limited

ARCHITECT :
WONG TUNG & PARTNERS LIMITED
ARCHITECTS & PLANNERS

MAIN CONTRACTOR :
CR Construction Company Limited

STRUCTURAL ENGINEER :
AECOM

FACADE CONSULTANT:
AECOM

NOTE :
1. ALL DIMENSIONS ARE IN mm.
2. ALL ELEVATIONS ARE VIEWED FROM OUTSIDE.
3. ALL DIMENSIONS TO BE VERIFIED ON SITE BEFORE FABRICATION.

LEGEND :
X1 — DETAIL MARK NO.
X001 — REFER SHEET NO.

1. F.F.L. --FINISHED FLOOR LEVEL
2. S.F.L. --STRUCTURAL FLOOR LEVEL
3. /R --REVERSED DETAIL

NO.	DATE	REVISED	BY
D	09/01/2019	GENERAL REVISED	
C	22/12/2018	GENERAL REVISED	
B	24/11/2018	GENERAL REVISED	
A	10/9/2018	GENERAL REVISED	

JOB NO. : J-837

PROJECT :
URA KWUN TONG TOWN CENTRE REDEVELOPMENT (AREA 2 & 3) AT NKIL 6514, KWUN TONG, KWLOON

TITLE :
EMBED TYPICAL DETAILS FOR CURTAIN WALL

DATE : 13-JUL-18 | SCALE : 1:3 (A1)

DRAWN BY : Asing | CHECKED BY : –

美特鋁質有限公司
MIDI ALUMINIUM FABRICATOR LTD.
Units 6-8, Sunray Industrial Centre, 1/F
610 Cha Kwo Ling Road, Kowloon
Tel:23489211-4 Fax:(852)27727666

DWG NO. : J837-CW-ED05 | REV. : D

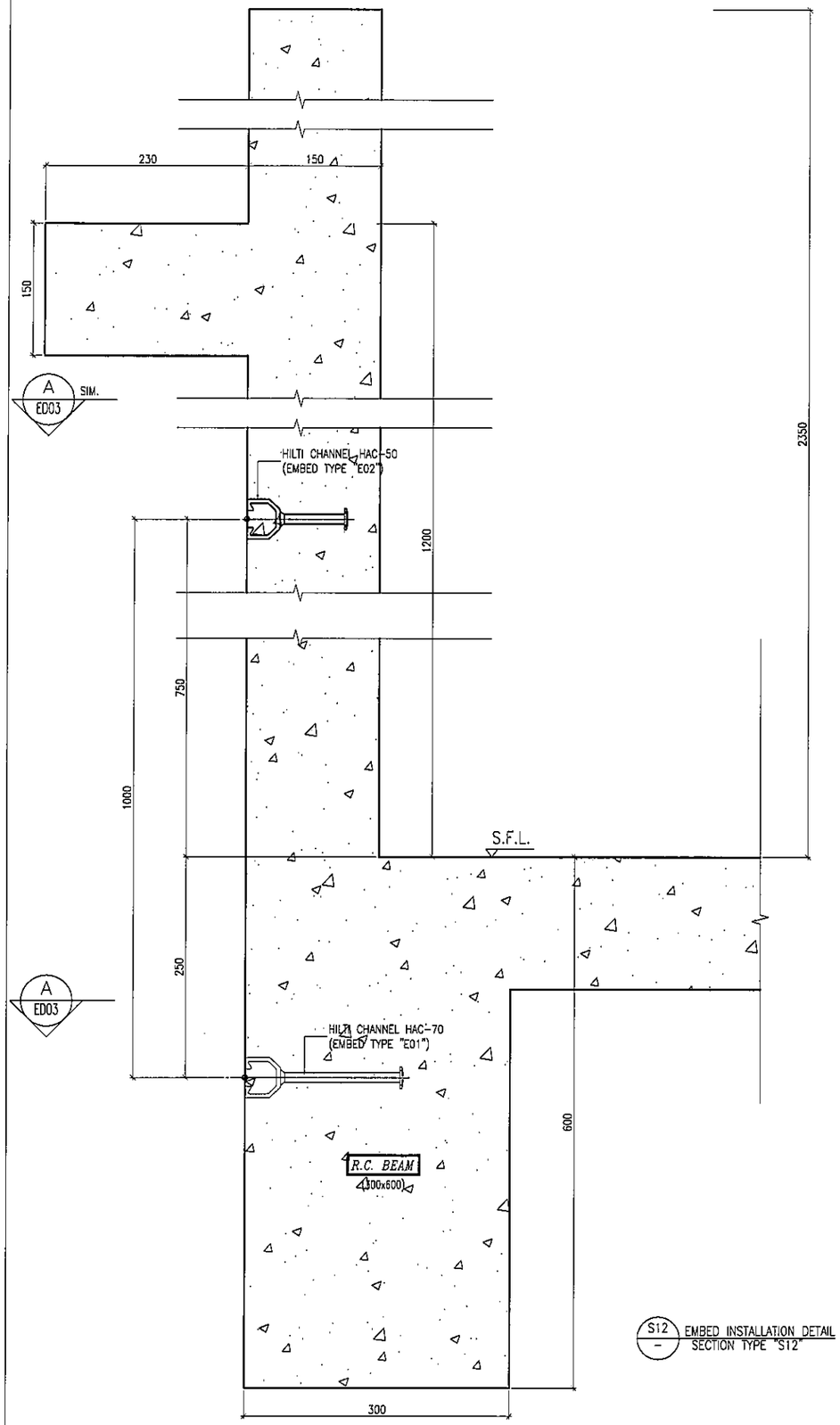

S12 — EMBED INSTALLATION DETAIL SECTION TYPE "S12"

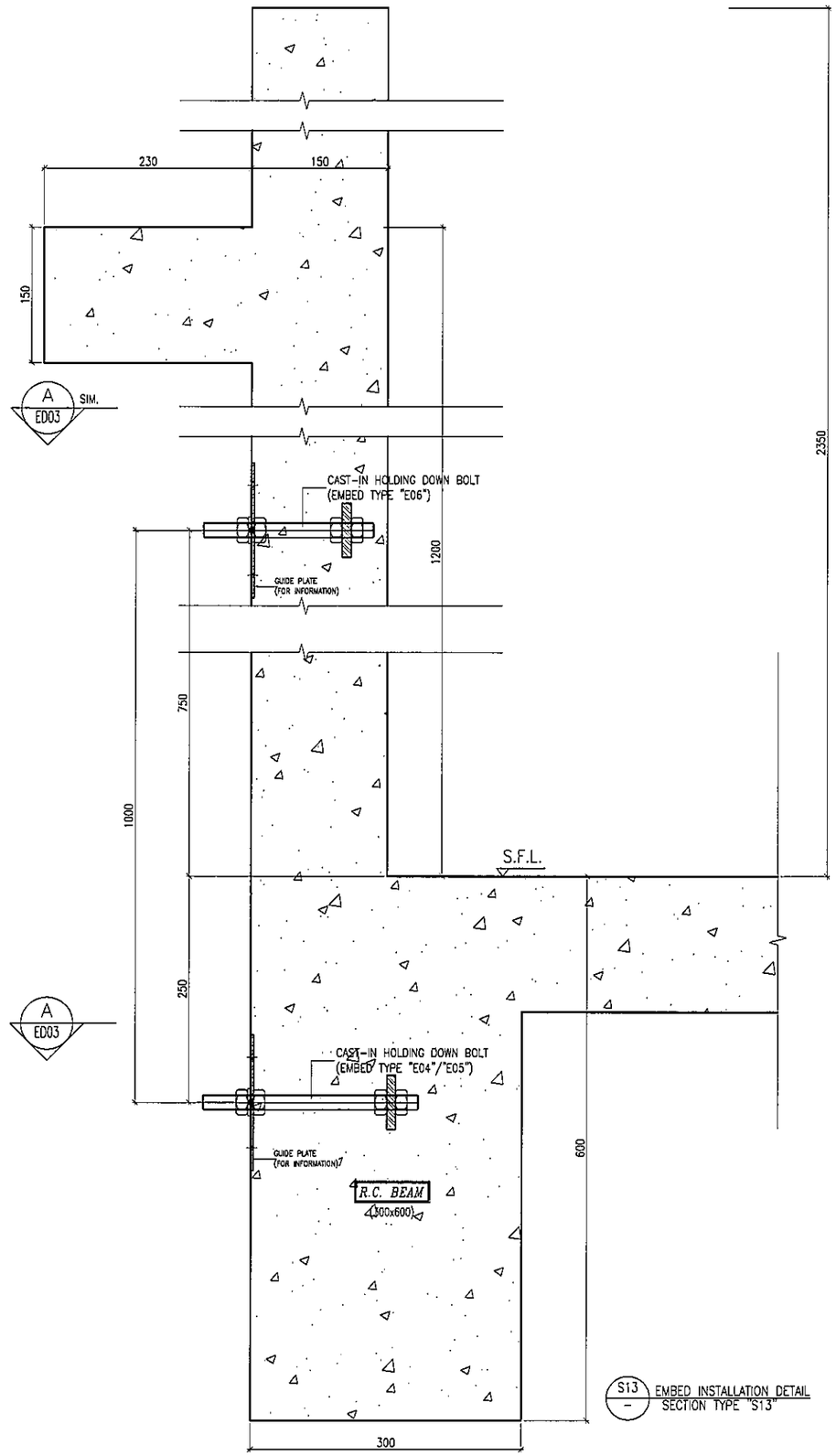

S13 — EMBED INSTALLATION DETAIL SECTION TYPE "S13"

B.D. REF :

CLIENT :
信和置業有限公司
Sino Land Company Limited

ARCHITECT :
WONG TUNG & PARTNERS LIMITED
ARCHITECTS & PLANNERS

MAIN CONTRACTOR :
CR Construction Company Limited

STRUCTURAL ENGINEER :
AECOM

FACADE CONSULTANT:
AECOM

NOTE :
1. ALL DIMENSIONS ARE IN mm.
2. ALL ELEVATIONS ARE VIEWED FROM OUTSIDE.
3. ALL DIMENSIONS TO BE VERIFIED ON SITE BEFORE FABRICATION.

LEGEND :
X1 / X001 — DETAIL MARK NO. / REFER SHEET NO.
1. F.F.L. --FINISHED FLOOR LEVEL
2. S.F.L. --STRUCTURAL FLOOR LEVEL
3. /R --REVERSED DETAIL

NO.	DATE	REVISED	BY
C	09/01/2019	GENERAL REVISED	
B	22/12/2018	GENERAL REVISED	
A	24/11/2018	GENERAL REVISED	

JOB NO. : J-837

PROJECT :
URA KWUN TONG TOWN CENTRE REDEVELOPMENT (AREA 2 & 3) AT NKIL 6514, KWUN TONG, KWLOON

TITLE :
EMBED TYPICAL DETAILS FOR CURTAIN WALL

DATE : 10-SEP-18 | SCALE : 1:3 (A1)

DRAWN BY : Asing | CHECKED BY : -

美特鋁質有限公司
MIDI ALUMINIUM FABRICATOR LTD.
Units 6-8, Sunray Industrial Centre, 1/F
610 Cha Kwo Ling Road, Kowloon
Tel:23489211-4 Fax:(852)27727666

DWG NO. : J837-CW-ED06 | REV. : C

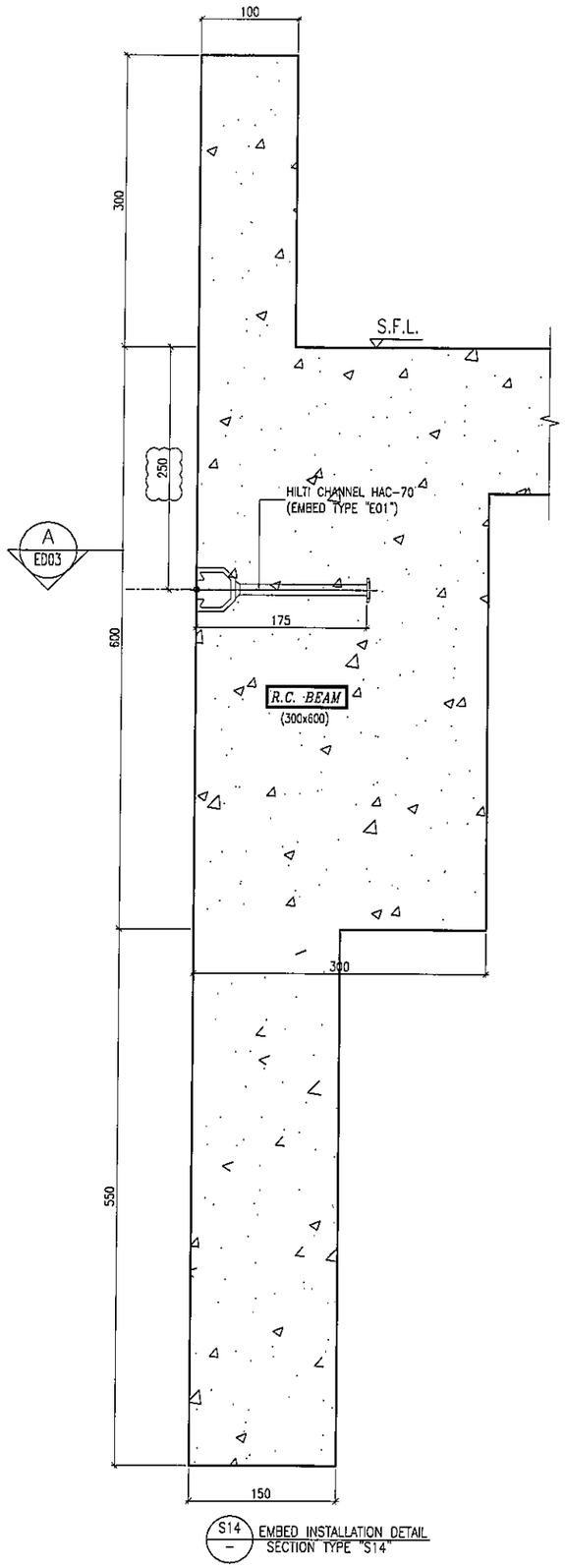

S14 / – EMBED INSTALLATION DETAIL
SECTION TYPE "S14"

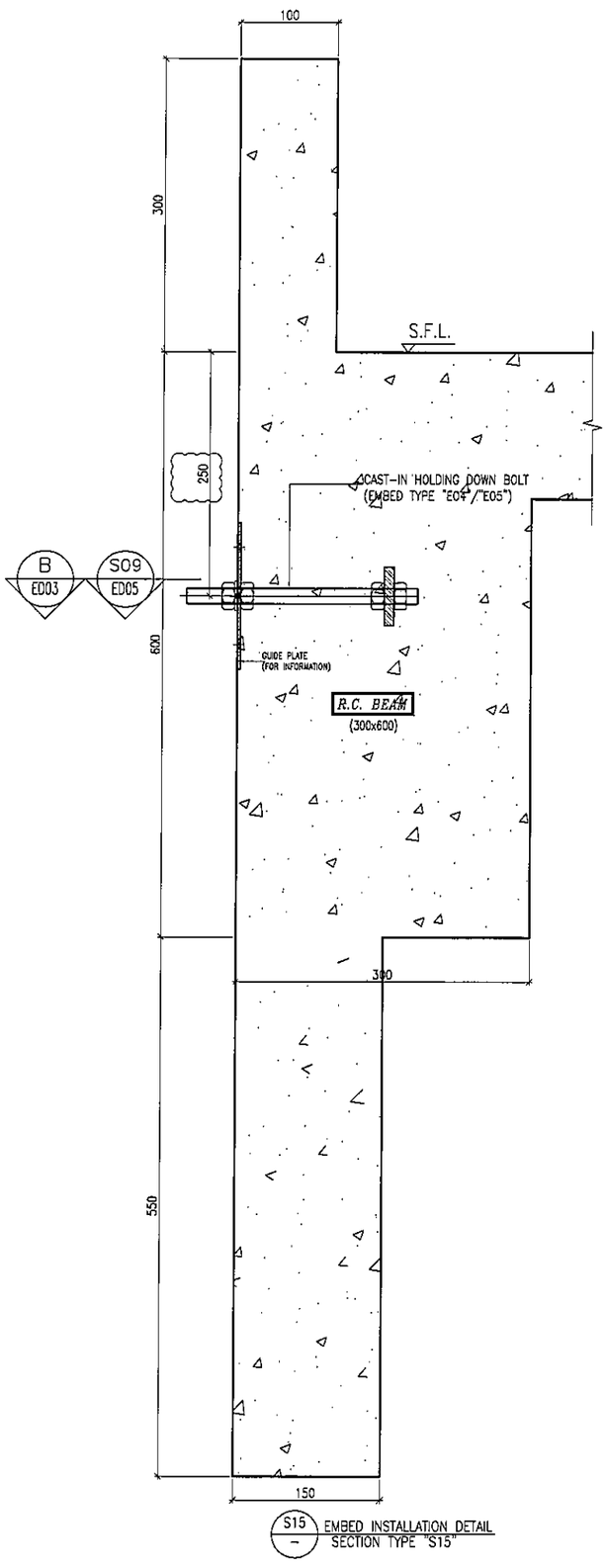

S15 / – EMBED INSTALLATION DETAIL
SECTION TYPE "S15"

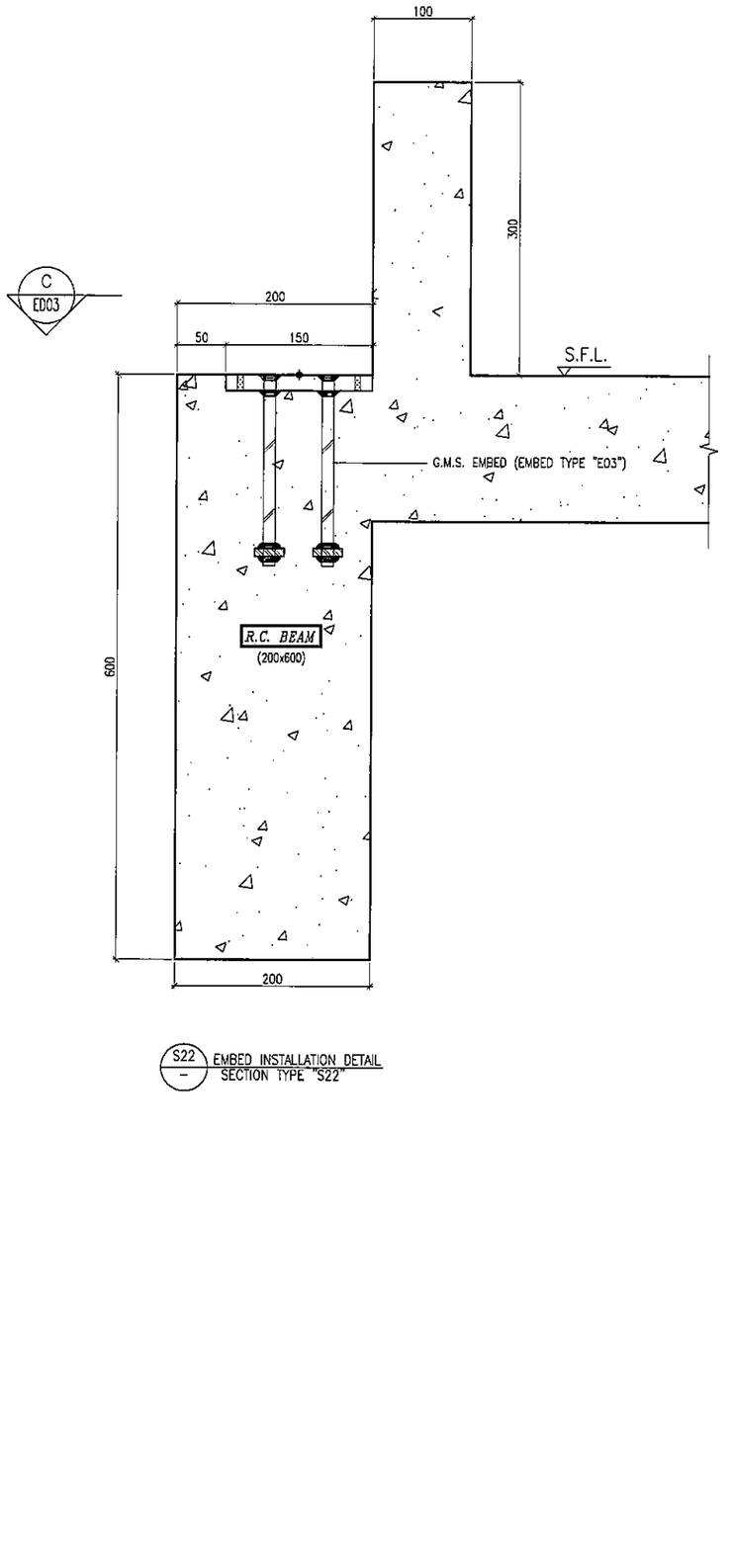

S22 / – EMBED INSTALLATION DETAIL
SECTION TYPE "S22"

B.D. REF :

CLIENT :
信和置業有限公司
Sino Land Company Limited

ARCHITECT :
WONG TUNG & PARTNERS LIMITED
ARCHITECTS & PLANNERS

MAIN CONTRACTOR :
CR Construction Company Limited

STRUCTURAL ENGINEER :
AECOM

FACADE CONSULTANT:
AECOM

NOTE :
1. ALL DIMENSIONS ARE IN mm.
2. ALL ELEVATIONS ARE VIEWED FROM OUTSIDE.
3. ALL DIMENSIONS TO BE VERIFIED ON SITE BEFORE FABRICATION.

LEGEND :
X1 / X001 — DETAIL MARK NO. / REFER SHEET NO.
1. F.F.L. --FINISHED FLOOR LEVEL
2. S.F.L. --STRUCTURAL FLOOR LEVEL
3. /R --REVERSED DETAIL

NO.	DATE	REVISED	BY
B	04/12/2018	GENERAL REVISED	
A	24/11/2018	GENERAL REVISED	

JOB NO. : J-837

PROJECT :
URA KWUN TONG TOWN CENTRE
REDEVELOPMENT (AREA 2 & 3) AT
NKIL 6514, KWUN TONG, KWLOON

TITLE :
EMBED TYPICAL DETAILS
FOR CURTAIN WALL

DATE : 10-SEP-18 | SCALE : 1:3 (A1)

DRAWN BY : Asing | CHECKED BY : -

美特鋁質有限公司
MIDI ALUMINIUM FABRICATOR LTD.
Units 6-8, Sunray Industrial Centre, 1/F
610 Cha Kwo Ling Road, Kowloon
Tel:23489211-4 Fax:(852)27727666

DWG NO. : J837-CW-ED07 | REV. : B

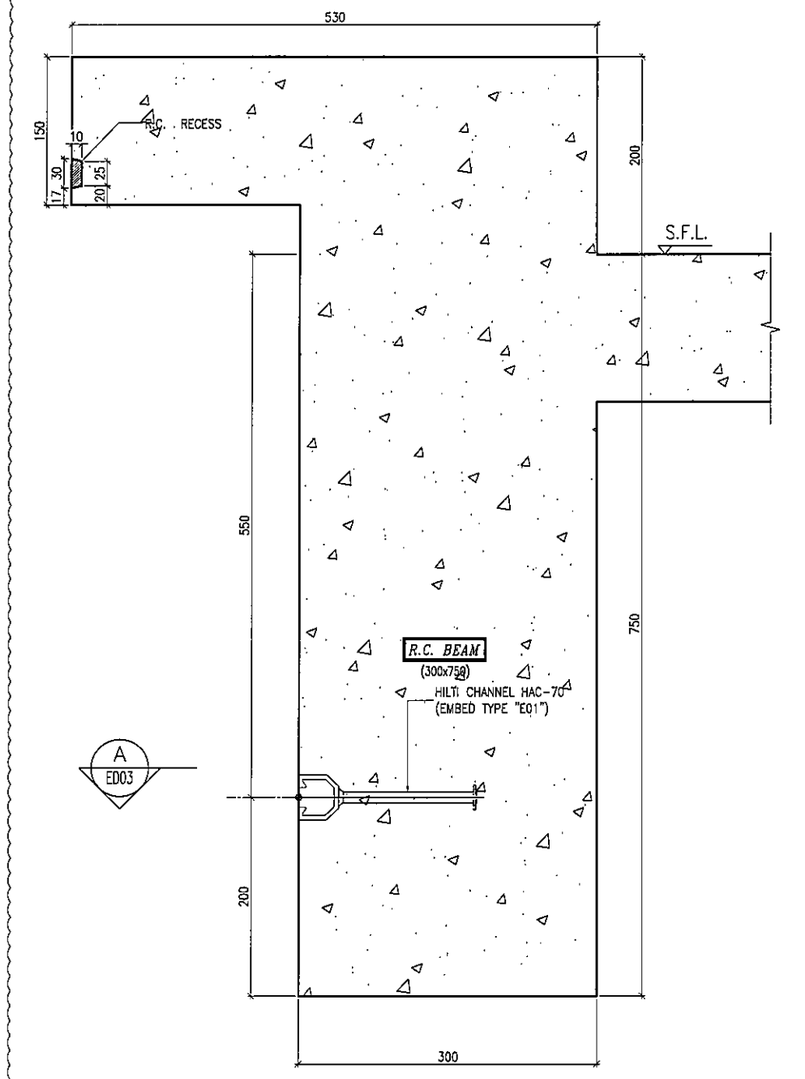

S16 / – EMBED INSTALLATION DETAIL
SECTION TYPE "S16"

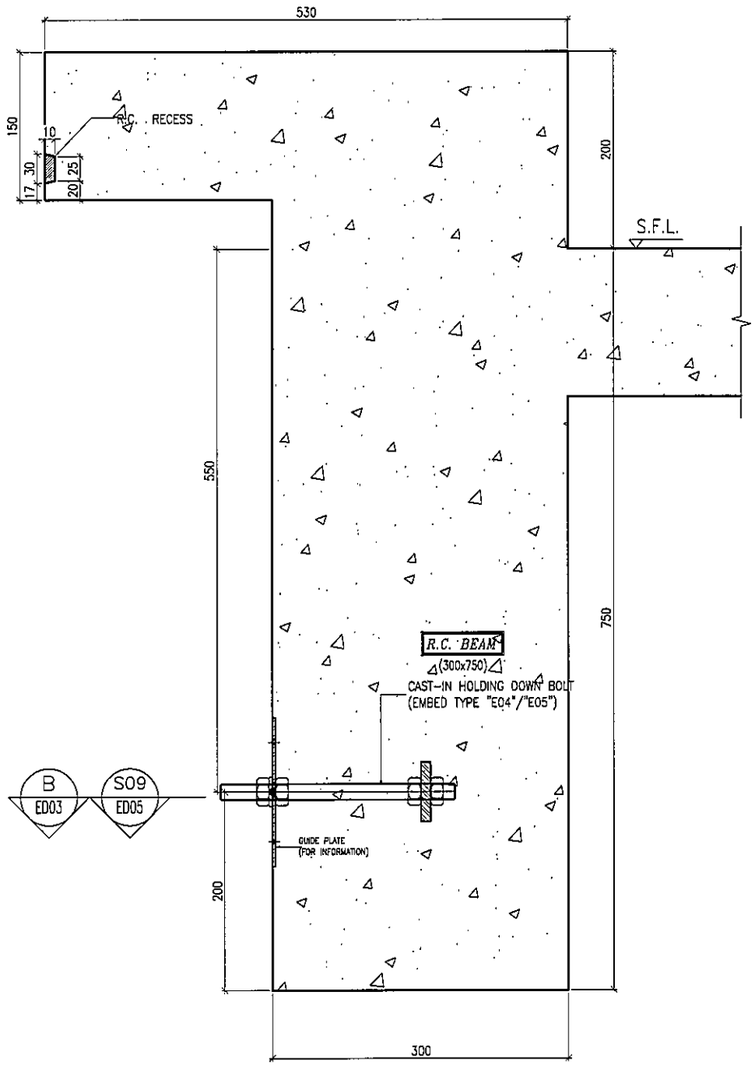

S17 / – EMBED INSTALLATION DETAIL
SECTION TYPE "S17"

B.D. REF :

CLIENT :
信和置業有限公司
Sino Land Company Limited

ARCHITECT :
WONG TUNG & PARTNERS LIMITED
ARCHITECTS & PLANNERS

MAIN CONTRACTOR :
CR Construction Company Limited

STRUCTURAL ENGINEER :
AECOM

FACADE CONSULTANT:
AECOM

NOTE :
1. ALL DIMENSIONS ARE IN mm.
2. ALL ELEVATIONS ARE VIEWED FROM OUTSIDE.
3. ALL DIMENSIONS TO BE VERIFIED ON SITE BEFORE FABRICATION.

LEGEND :
X1 / X001 — DETAIL MARK NO. / REFER SHEET NO.
1. F.F.L. --FINISHED FLOOR LEVEL
2. S.F.L. --STRUCTURAL FLOOR LEVEL
3. /R --REVERSED DETAIL

NO.	DATE	REVISED	BY
B	24/06/2019	GENERAL REVISED	
A	24/11/2018	GENERAL REVISED	

JOB NO. : J-837

PROJECT :
URA KWUN TONG TOWN CENTRE
REDEVELOPMENT (AREA 2 & 3) AT
NKIL 6514, KWUN TONG, KWLOON

TITLE :
EMBED TYPICAL DETAILS
FOR CURTAIN WALL

DATE : 10-SEP-18 | SCALE : 1:3 (A1)

DRAWN BY : Asing | CHECKED BY : –

美特鋁質有限公司
MIDI ALUMINIUM FABRICATOR LTD.
Units 6-8, Sunray Industrial Centre, 1/F
610 Cha Kwo Ling Road, Kowloon
Tel:23489211-4 Fax:(852)27727666

DWG NO. : J837-CW-ED08 | REV. : B

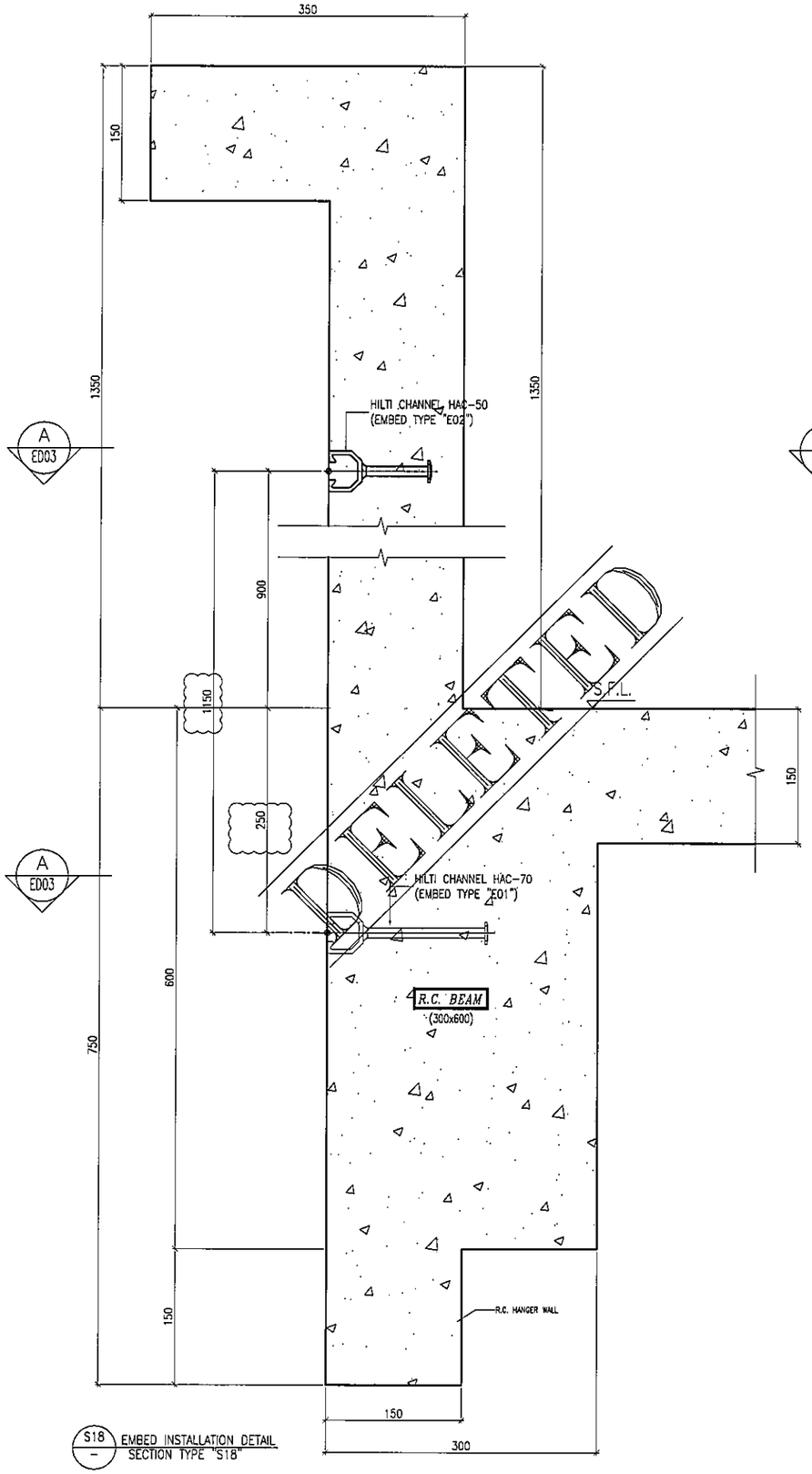

S18 — EMBED INSTALLATION DETAIL
SECTION TYPE "S18"

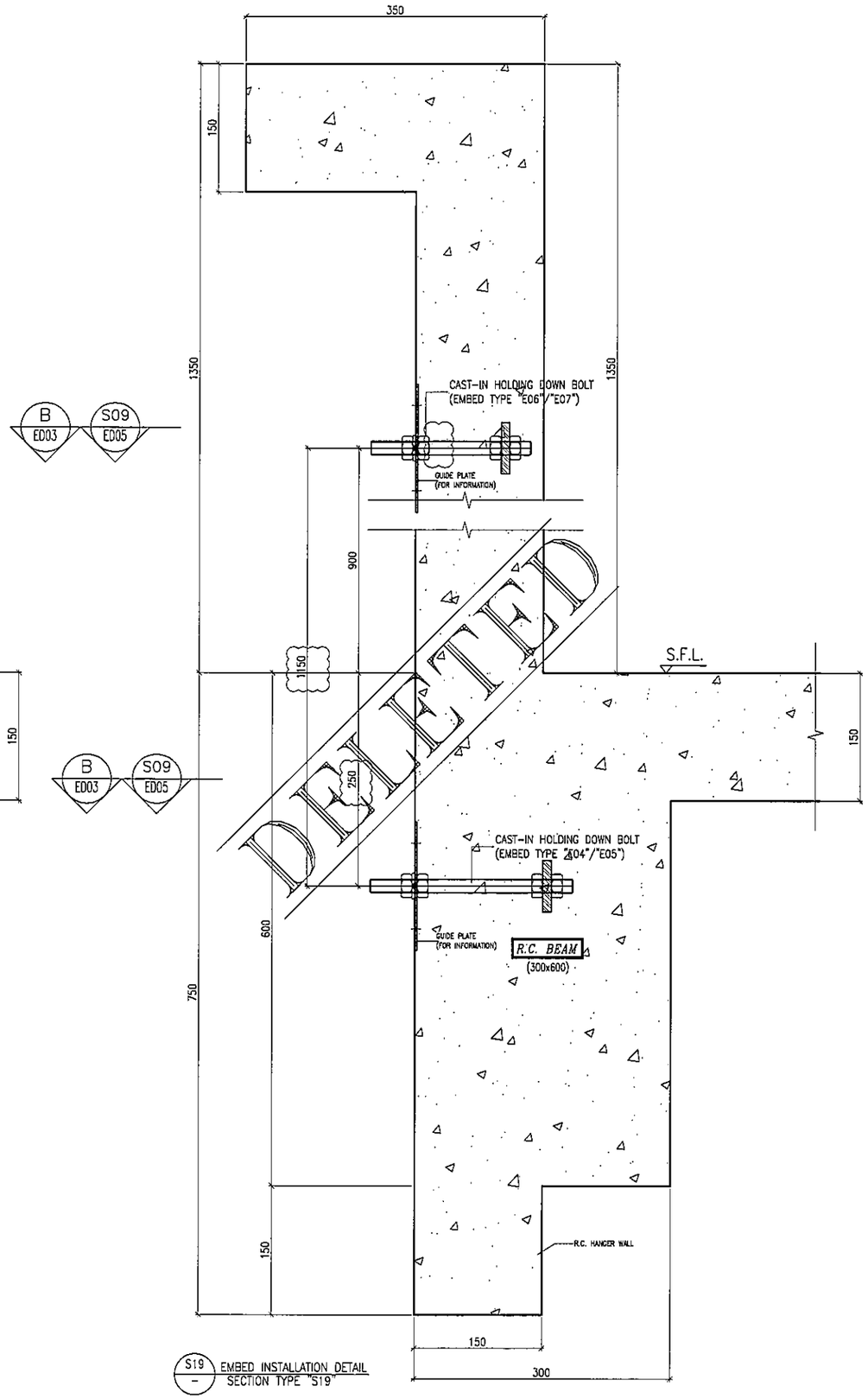

S19 — EMBED INSTALLATION DETAIL
SECTION TYPE "S19"

B.D. REF :

CLIENT :
信和置業有限公司
Sino Land Company Limited

ARCHITECT :
WONG TUNG & PARTNERS LIMITED
ARCHITECTS & PLANNERS

MAIN CONTRACTOR :
CR Construction Company Limited

STRUCTURAL ENGINEER :
AECOM

FACADE CONSULTANT:
AECOM

NOTE :
1. ALL DIMENSIONS ARE IN mm.
2. ALL ELEVATIONS ARE VIEWED FROM OUTSIDE.
3. ALL DIMENSIONS TO BE VERIFIED ON SITE BEFORE FABRICATION.

LEGEND :
X1 / XD01 — DETAIL MARK NO. / REFER SHEET NO.
1. F.F.L. --FINISHED FLOOR LEVEL
2. S.F.L. --STRUCTURAL FLOOR LEVEL
3. (R) --REVERSED DETAIL

NO.	DATE	REVISED	BY
B	26/5/2019	GENERAL REVISED	
A	24/11/2018	GENERAL REVISED	

JOB NO. : J-837

PROJECT :
URA KWUN TONG TOWN CENTRE
REDEVELOPMENT (AREA 2 & 3) AT
NKIL 6514, KWUN TONG, KWLOON

TITLE :
EMBED TYPICAL DETAILS
FOR CURTAIN WALL

DATE : 10-SEP-18 | SCALE : 1:3 (A1)

DRAWN BY : Asing | CHECKED BY : -

美特鋁製有限公司
MIDI ALUMINIUM FABRICATOR LTD.
Units 6-8, Sunray Industrial Centre, 1/F
610 Cha Kwo Ling Road, Kowloon
Tel:23489211-4 Fax:(852)27727666

DWG NO. : J837-CW-ED09 | REV. : B

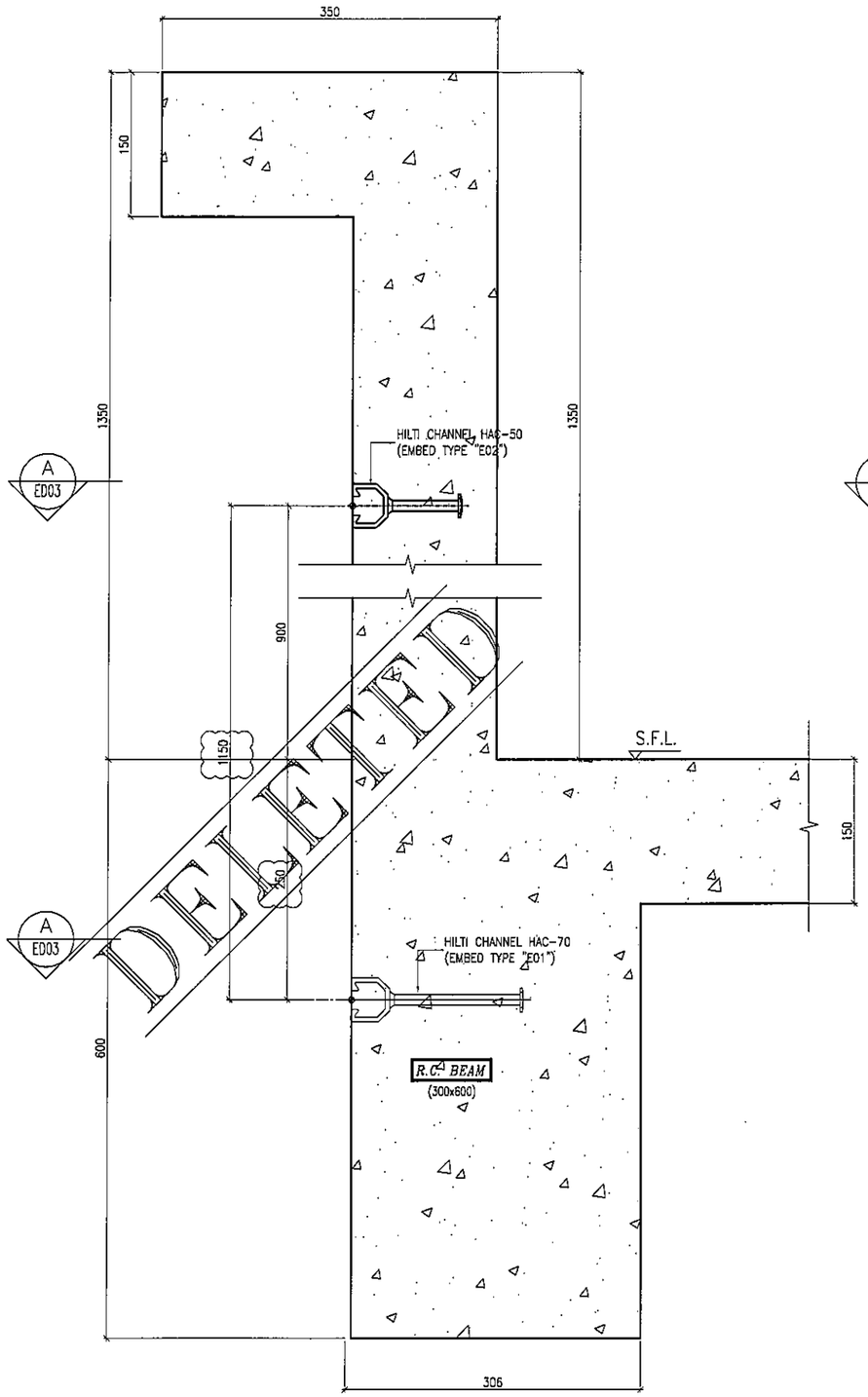

S20 / – EMBED INSTALLATION DETAIL
SECTION TYPE "S20"

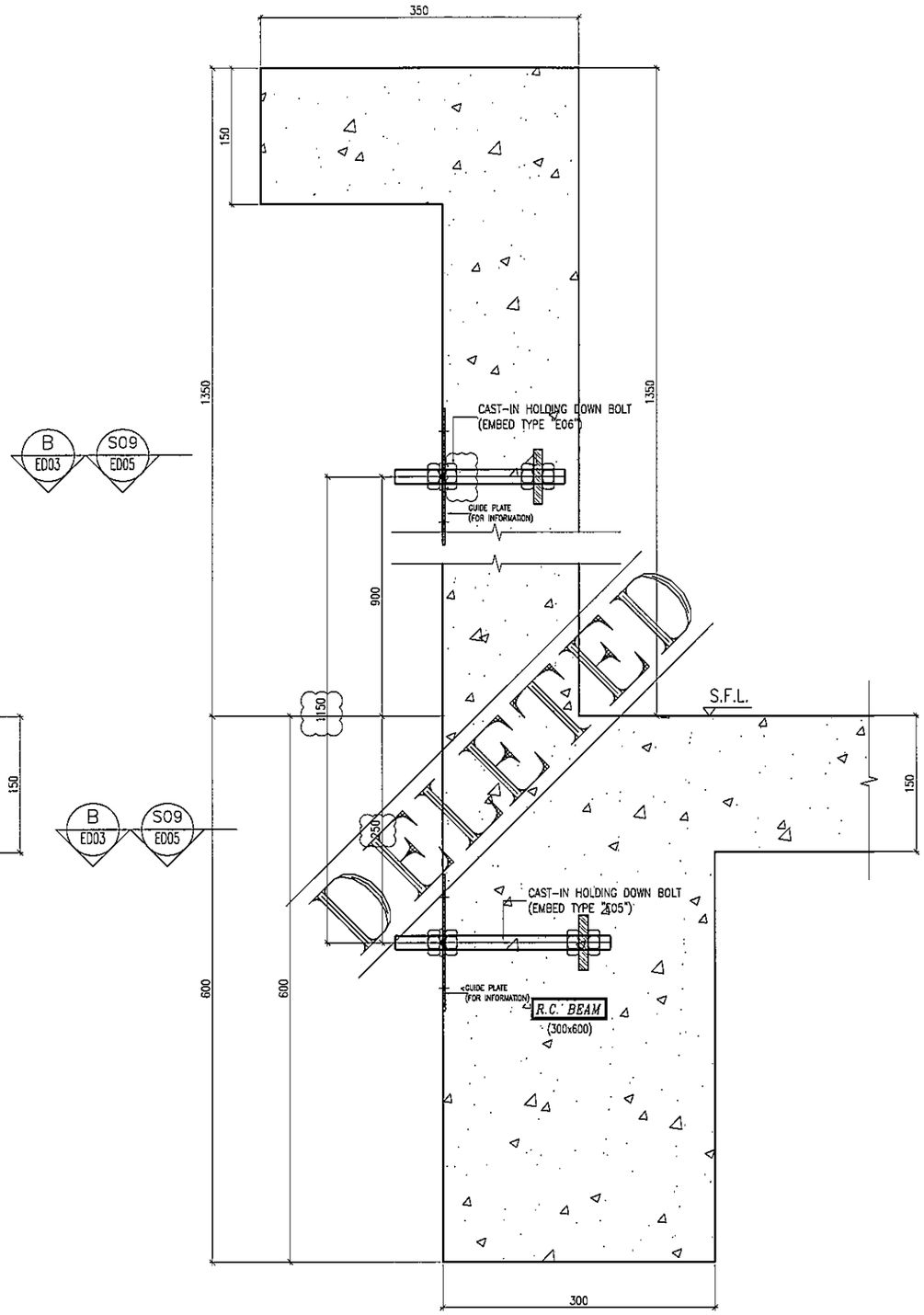

S21 / – EMBED INSTALLATION DETAIL
SECTION TYPE "S21"

B.D. REF :

CLIENT :
信和置業有限公司
Sino Land Company Limited

ARCHITECT :
WONG TUNG & PARTNERS LIMITED
ARCHITECTS & PLANNERS

MAIN CONTRACTOR :
CR Construction Company Limited

STRUCTURAL ENGINEER :
AECOM

FACADE CONSULTANT:
AECOM

NOTE :
1. ALL DIMENSIONS ARE IN mm.
2. ALL ELEVATIONS ARE VIEWED FROM OUTSIDE.
3. ALL DIMENSIONS TO BE VERIFIED ON SITE BEFORE FABRICATION.

LEGEND :
X1 / X001 — DETAIL MARK NO. / REFER SHEET NO.
1. F.F.L. --FINISHED FLOOR LEVEL
2. S.F.L. --STRUCTURAL FLOOR LEVEL
3. (R) --REVERSED DETAIL

NO.	DATE	REVISED	BY
B	26/5/2019	GENERAL REVISED	
A	24/11/2018	GENERAL REVISED	

JOB NO. : J-837

PROJECT :
URA KWUN TONG TOWN CENTRE
REDEVELOPMENT (AREA 2 & 3) AT
NKIL 6514, KWUN TONG, KWLOON

TITLE :
EMBED TYPICAL DETAILS
FOR CURTAIN WALL

DATE : 10-SEP-18 | SCALE : 1:3 (A1)

DRAWN BY : Asing | CHECKED BY : –

美特鋁製有限公司
MIDI ALUMINIUM FABRICATOR LTD.
Units 6-8, Sunray Industrial Centre, 1/F
610 Cha Kwo Ling Road, Kowloon
Tel:23489211-4 Fax:(852)27727666

DWG NO. : J837-CW-ED10 | REV. : B

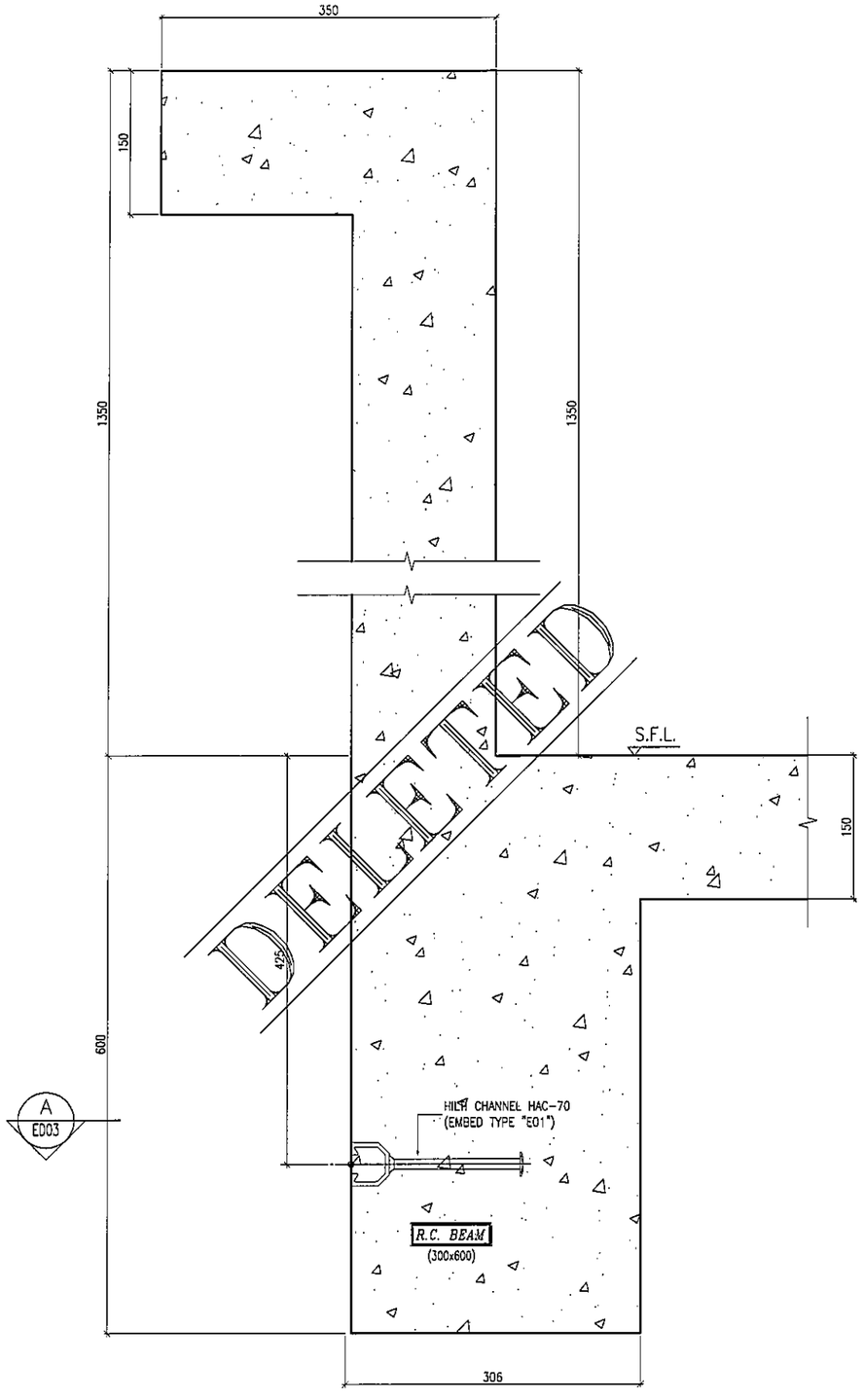

S23 – EMBED INSTALLATION DETAIL SECTION TYPE "S23"

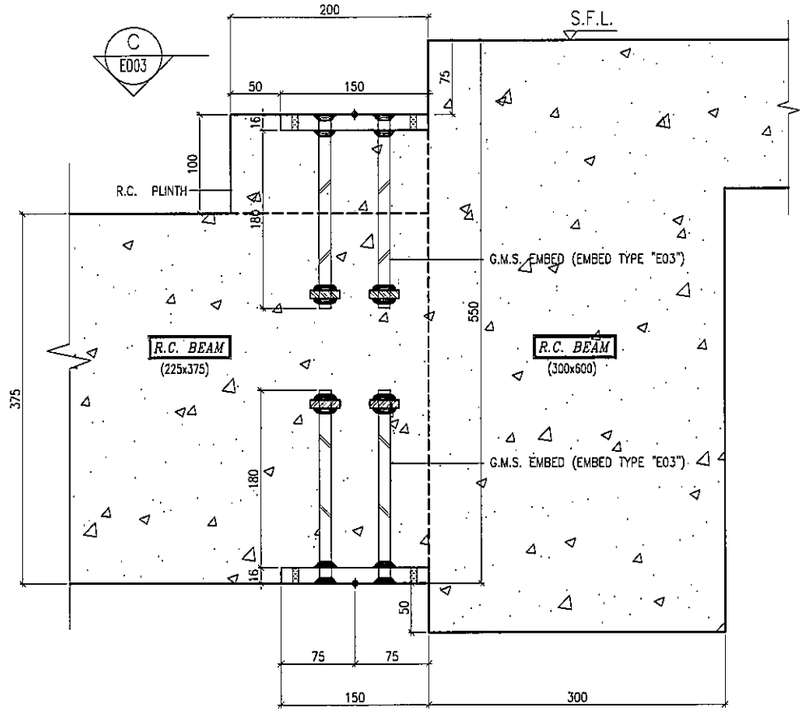

S24 – EMBED INSTALLATION DETAIL SECTION TYPE "S24"

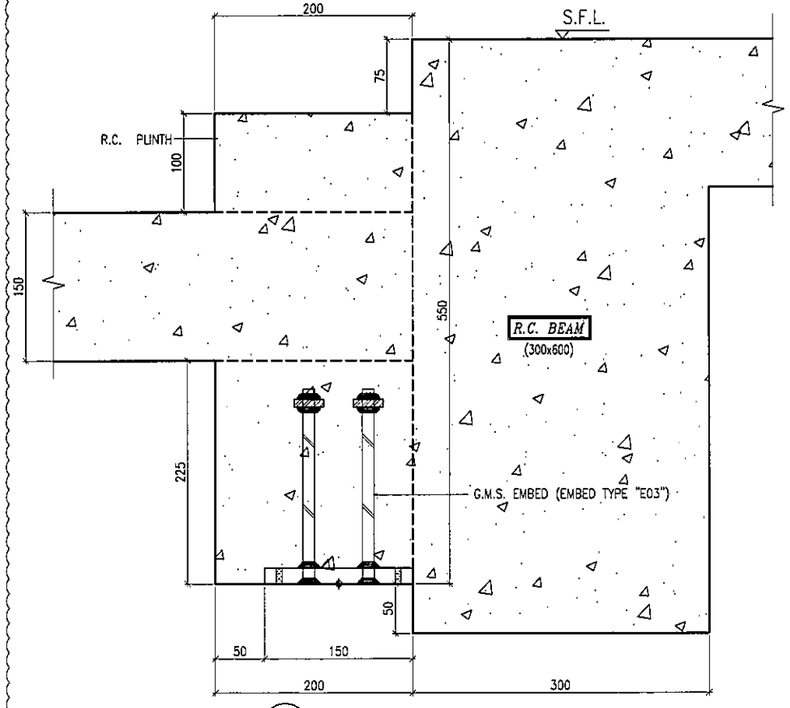

S25 – EMBED INSTALLATION DETAIL SECTION TYPE "S25"

B.D. REF :

CLIENT :
信和置業有限公司
Sino Land Company Limited

ARCHITECT : WONG TUNG & PARTNERS LIMITED
ARCHITECTS & PLANNERS

MAIN CONTRACTOR :
CR Construction Company Limited

STRUCTURAL ENGINEER :
AECOM

FACADE CONSULTANT:
AECOM

NOTE :
1. ALL DIMENSIONS ARE IN mm.
2. ALL ELEVATIONS ARE VIEWED FROM OUTSIDE.
3. ALL DIMENSIONS TO BE VERIFIED ON SITE BEFORE FABRICATION.

LEGEND :
X1 / XDD1 — DETAIL MARK NO. / REFER SHEET NO.
1. F.F.L. --FINISHED FLOOR LEVEL
2. S.F.L. --STRUCTURAL FLOOR LEVEL
3. /R --REVERSED DETAIL

NO.	DATE	REVISED	BY
A	14/9/2018	GENERAL REVISED	

JOB NO. : J-837

PROJECT :
URA KWUN TONG TOWN CENTRE REDEVELOPMENT (AREA 2 & 3) AT NKIL 6514, KWUN TONG, KWLOON

TITLE :
EMBED TYPICAL DETAILS FOR CURTAIN WALL

DATE : 10-SEP-18 | SCALE : 1:3 (A1)

DRAWN BY : Asing | CHECKED BY : -

美特鋁質有限公司
MIDI ALUMINIUM FABRICATOR LTD.
Units 6-8, Sunray Industrial Centre, 1/F
610 Cha Kwo Ling Road, Kowloon
Tel:23489211-4 Fax:(852)27727666

DWG NO. : J837-CW-ED11 | REV. : A

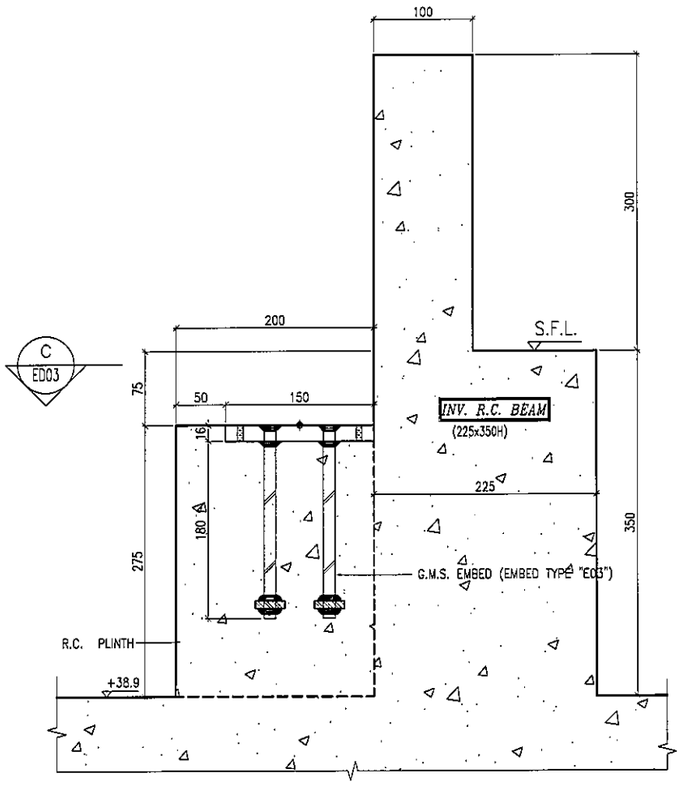

S26 EMBED INSTALLATION DETAIL
– SECTION TYPE "S26"

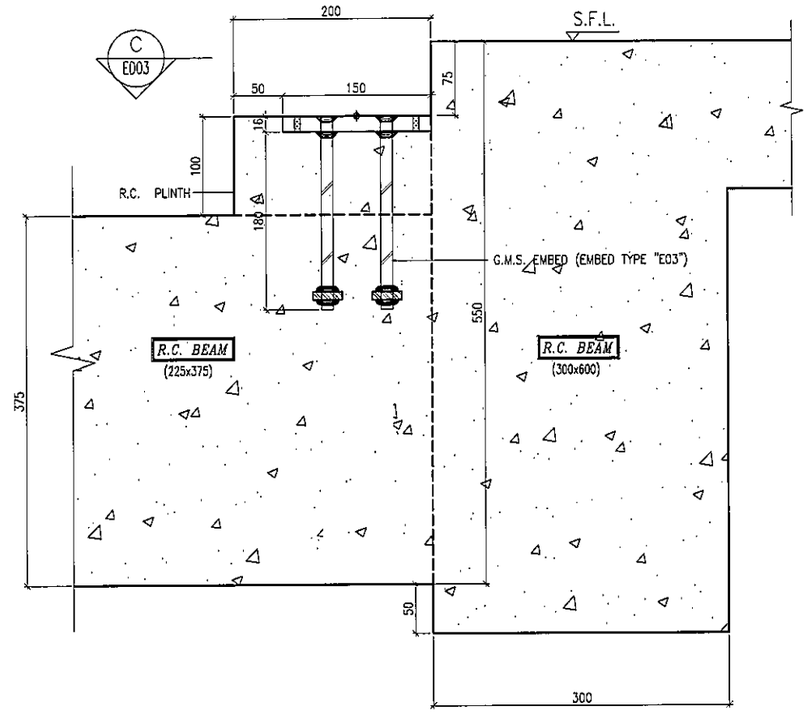

S27 EMBED INSTALLATION DETAIL
– SECTION TYPE "S27"

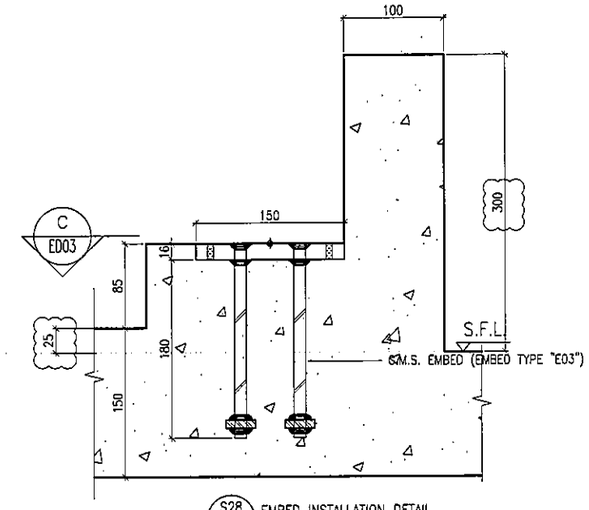

S28 EMBED INSTALLATION DETAIL
– SECTION TYPE "S28"

B.D. REF :

CLIENT :
信和置業有限公司
Sino Land Company Limited

ARCHITECT :
WONG TUNG & PARTNERS LIMITED
ARCHITECTS & PLANNERS

MAIN CONTRACTOR :
CR Construction Company Limited

STRUCTURAL ENGINEER :
AECOM

FACADE CONSULTANT:
AECOM

NOTE :
1. ALL DIMENSIONS ARE IN mm.
2. ALL ELEVATIONS ARE VIEWED FROM OUTSIDE.
3. ALL DIMENSIONS TO BE VERIFIED ON SITE BEFORE FABRICATION.

LEGEND :
X1 / X001 — DETAIL MARK NO. / REFER SHEET NO.
1. F.F.L. --FINISHED FLOOR LEVEL
2. S.F.L. --STRUCTURAL FLOOR LEVEL
3. /R --REVERSED DETAIL

NO.	DATE	REVISED	BY
C	18/08/2019	GENERAL REVISED	
B	20/06/2019	GENERAL REVISED	
A	22/12/2018	GENERAL REVISED	

JOB NO. : J-837

PROJECT :
URA KWUN TONG TOWN CENTRE REDEVELOPMENT (AREA 2 & 3) AT NKIL 6514, KWUN TONG, KWLOON

TITLE :
EMBED TYPICAL DETAILS FOR CURTAIN WALL

DATE : 14-SEP-18 | SCALE : 1:3 (A1)

DRAWN BY : Asing | CHECKED BY : –

美特鋁質有限公司
MIDI ALUMINIUM FABRICATOR LTD.
Units 6-8, Sunray Industrial Centre, 1/F
610 Cha Kwo Ling Road, Kowloon
Tel:23489211-4 Fax:(852)27727666

DWG NO. : J837-CW-ED12 | REV. : C

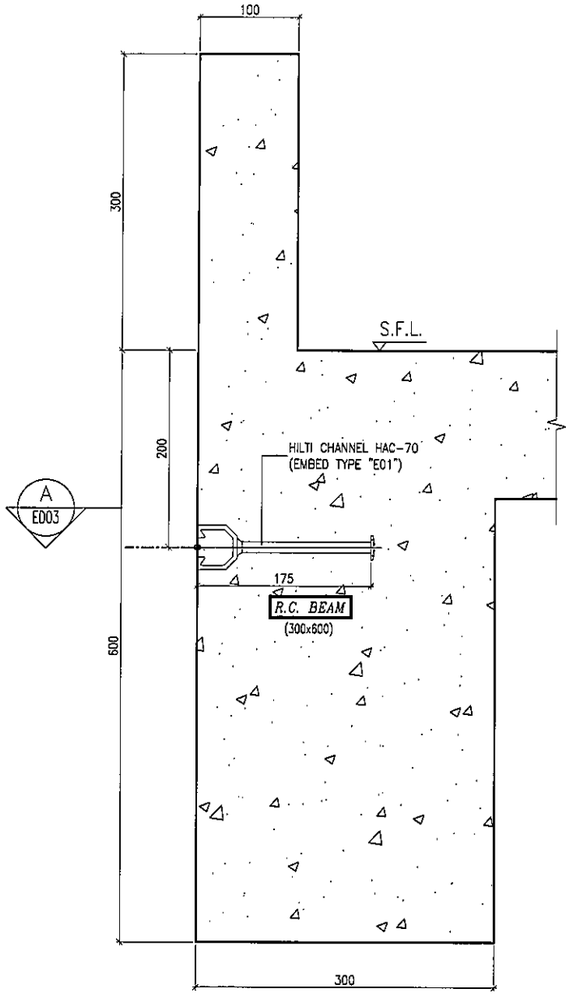

S29 – EMBED INSTALLATION DETAIL
SECTION TYPE "S29"

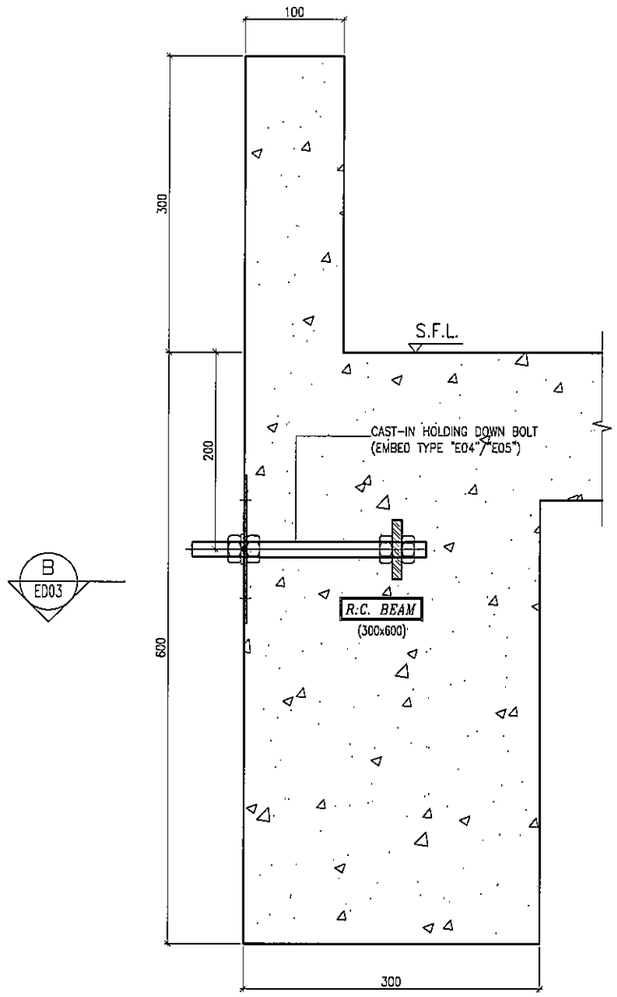

S30 – EMBED INSTALLATION DETAIL
SECTION TYPE "S30"

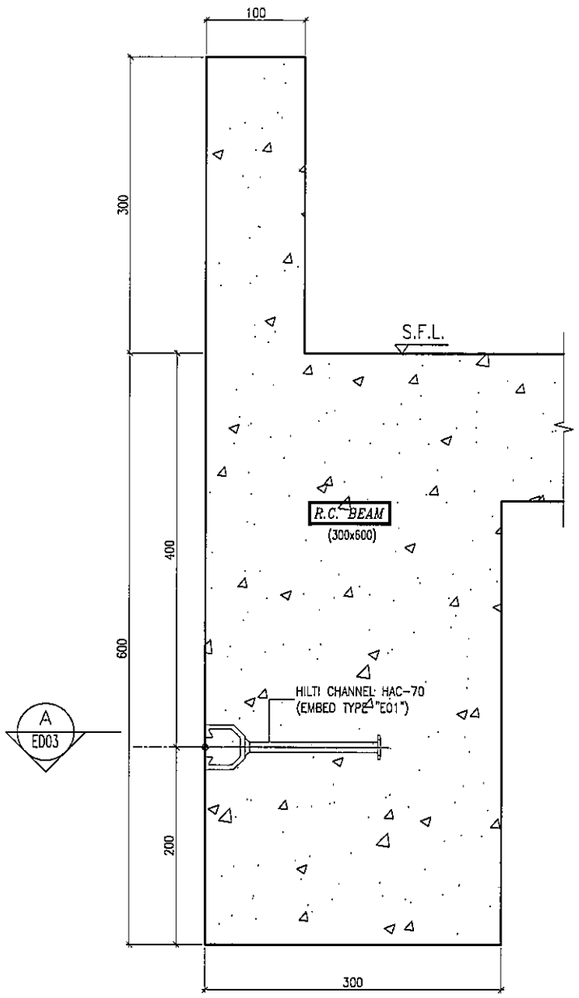

S31 – EMBED INSTALLATION DETAIL
SECTION TYPE "S31"

B.D. REF :

CLIENT :
信和置業有限公司
Sino Land Company Limited

ARCHITECT :
WONG TUNG & PARTNERS LIMITED
ARCHITECTS & PLANNERS

MAIN CONTRACTOR :
CR Construction Company Limited

STRUCTURAL ENGINEER :
AECOM

FACADE CONSULTANT:
AECOM

NOTE :
1. ALL DIMENSIONS ARE IN mm.
2. ALL ELEVATIONS ARE VIEWED FROM OUTSIDE.
3. ALL DIMENSIONS TO BE VERIFIED ON SITE BEFORE FABRICATION.

LEGEND :
X1 / X001 — DETAIL MARK NO. / REFER SHEET NO.
1. F.F.L. --FINISHED FLOOR LEVEL
2. S.F.L. --STRUCTURAL FLOOR LEVEL
3. (/R) --REVERSED DETAIL

NO.	DATE	REVISED	BY

JOB NO. : J-837

PROJECT :
URA KWUN TONG TOWN CENTRE
REDEVELOPMENT (AREA 2 & 3) AT
NKIL 6514, KWUN TONG, KWLOON

TITLE :
EMBED TYPICAL DETAILS
FOR CURTAIN WALL

DATE : 28-JAN-19	SCALE : 1:3 (A1)
DRAWN BY : Asing	CHECKED BY : -

美特鋁質有限公司
MIDI ALUMINIUM FABRICATOR LTD.
Units 6-8, Sunray Industrial Centre, 1/F
610 Cha Kwo Ling Road, Kowloon
Tel:23489211-4 Fax:(852)27727666

DWG NO. : J837-CW-ED13 | REV. : --

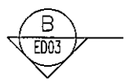

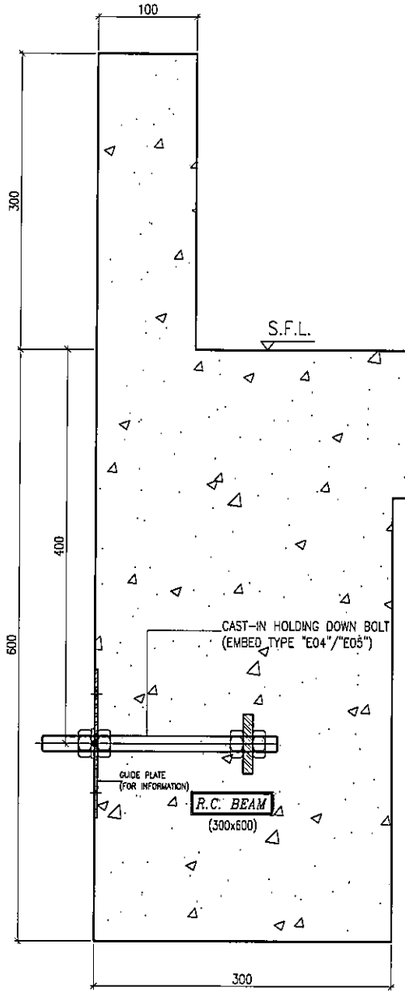

S32 – EMBED INSTALLATION DETAIL SECTION TYPE "S32"

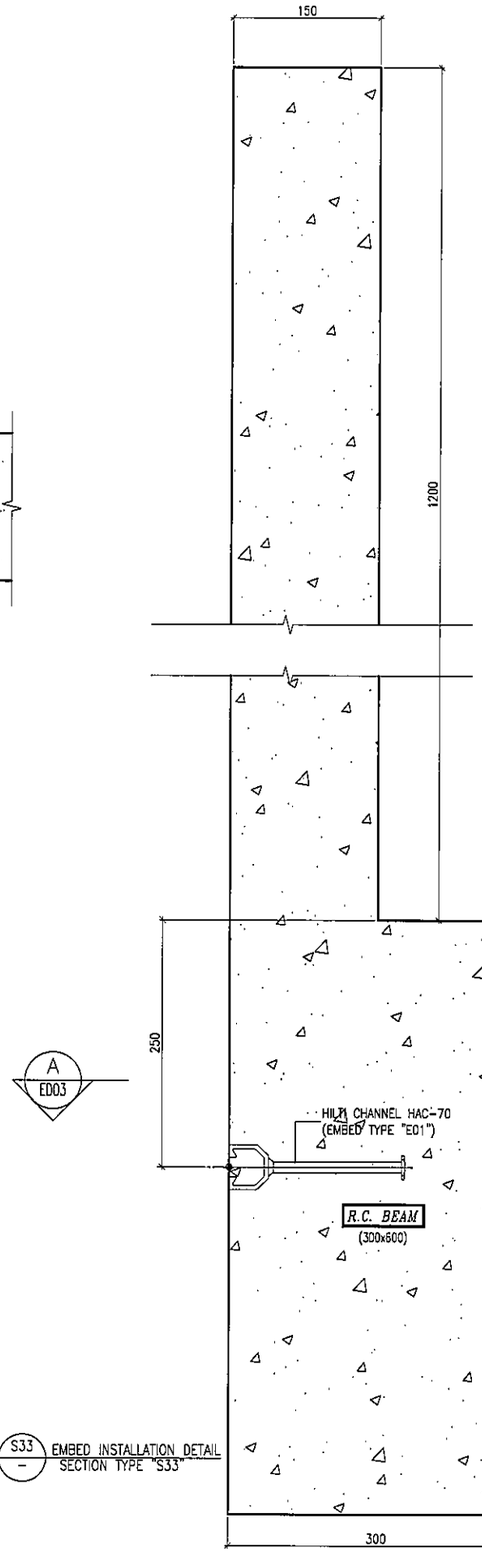

S33 – EMBED INSTALLATION DETAIL SECTION TYPE "S33"

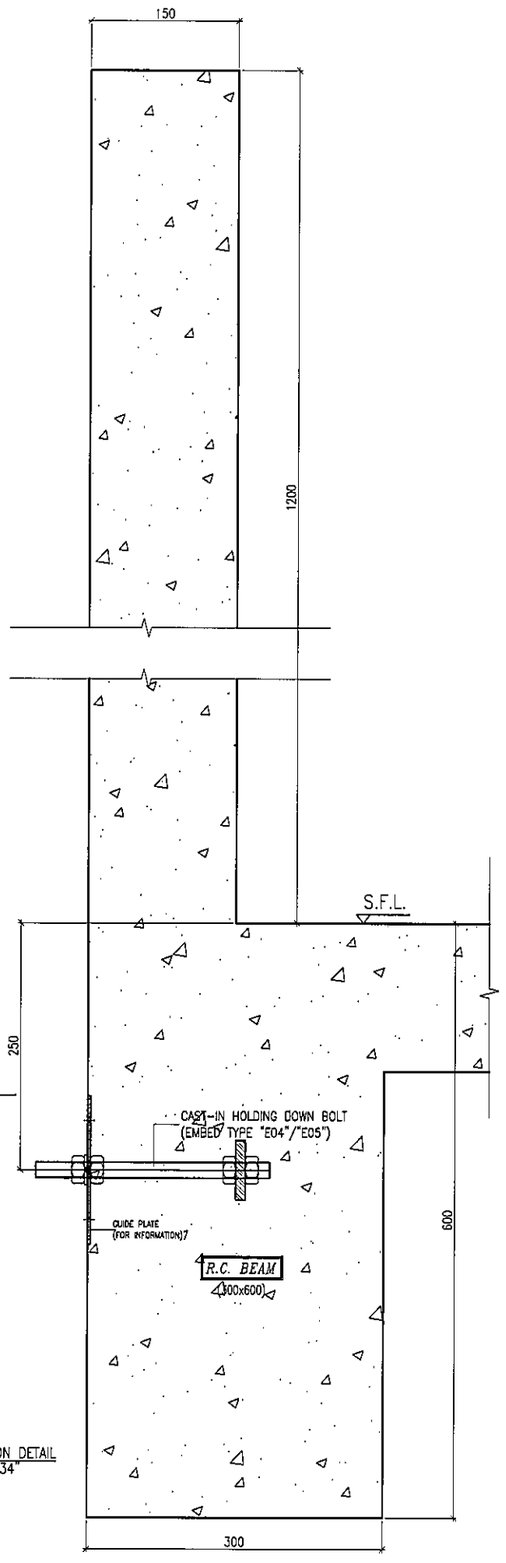

S34 – EMBED INSTALLATION DETAIL SECTION TYPE "S34"

B.D. REF :

CLIENT :
信和置業有限公司
Sino Land Company Limited

ARCHITECT :
WONG TUNG & PARTNERS LIMITED
ARCHITECTS & PLANNERS

MAIN CONTRACTOR :
CR Construction Company Limited

STRUCTURAL ENGINEER :
AECOM

FACADE CONSULTANT:
AECOM

NOTE :
1. ALL DIMENSIONS ARE IN mm.
2. ALL ELEVATIONS ARE VIEWED FROM OUTSIDE.
3. ALL DIMENSIONS TO BE VERIFIED ON SITE BEFORE FABRICATION.

LEGEND :
X1 / X001 — DETAIL MARK NO. / REFER SHEET NO.
1. F.F.L. --FINISHED FLOOR LEVEL
2. S.F.L. --STRUCTURAL FLOOR LEVEL
3. /R --REVERSED DETAIL

NO.	DATE	REVISED	BY

JOB NO. : J-837

PROJECT :
URA KWUN TONG TOWN CENTRE REDEVELOPMENT (AREA 2 & 3) AT NKIL 6514, KWUN TONG, KWLOON

TITLE :
EMBED TYPICAL DETAILS FOR CURTAIN WALL

DATE : 28-JAN-19 | SCALE : 1:3 (A1)

DRAWN BY : Asing | CHECKED BY : –

美特鋁質有限公司
MIDI ALUMINUM FABRICATOR LTD.
Units 6-8, Sunray Industrial Centre, 1/F
610 Cha Kwo Ling Road, Kowloon
Tel:23489211-4 Fax:(852)27727666

DWG NO. : J837-CW-ED14 | REV. : –

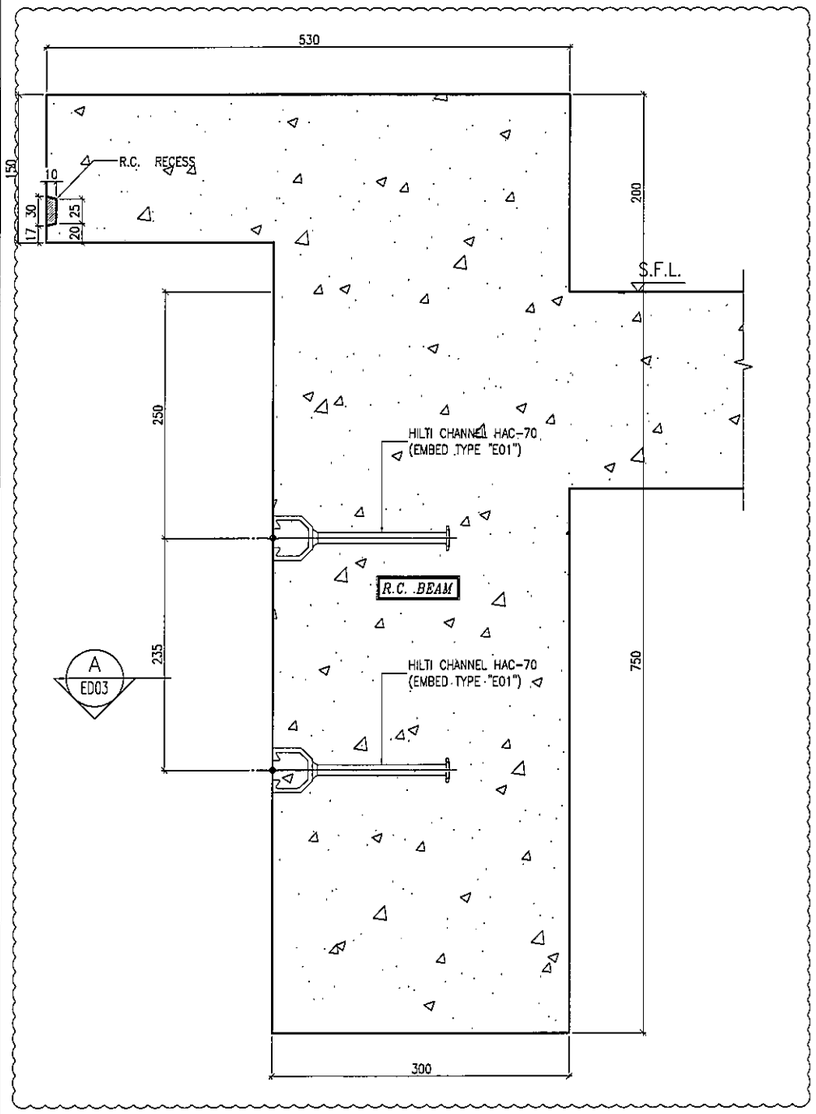

S35 — EMBED INSTALLATION DETAIL
SECTION TYPE "S35"

A
ED03

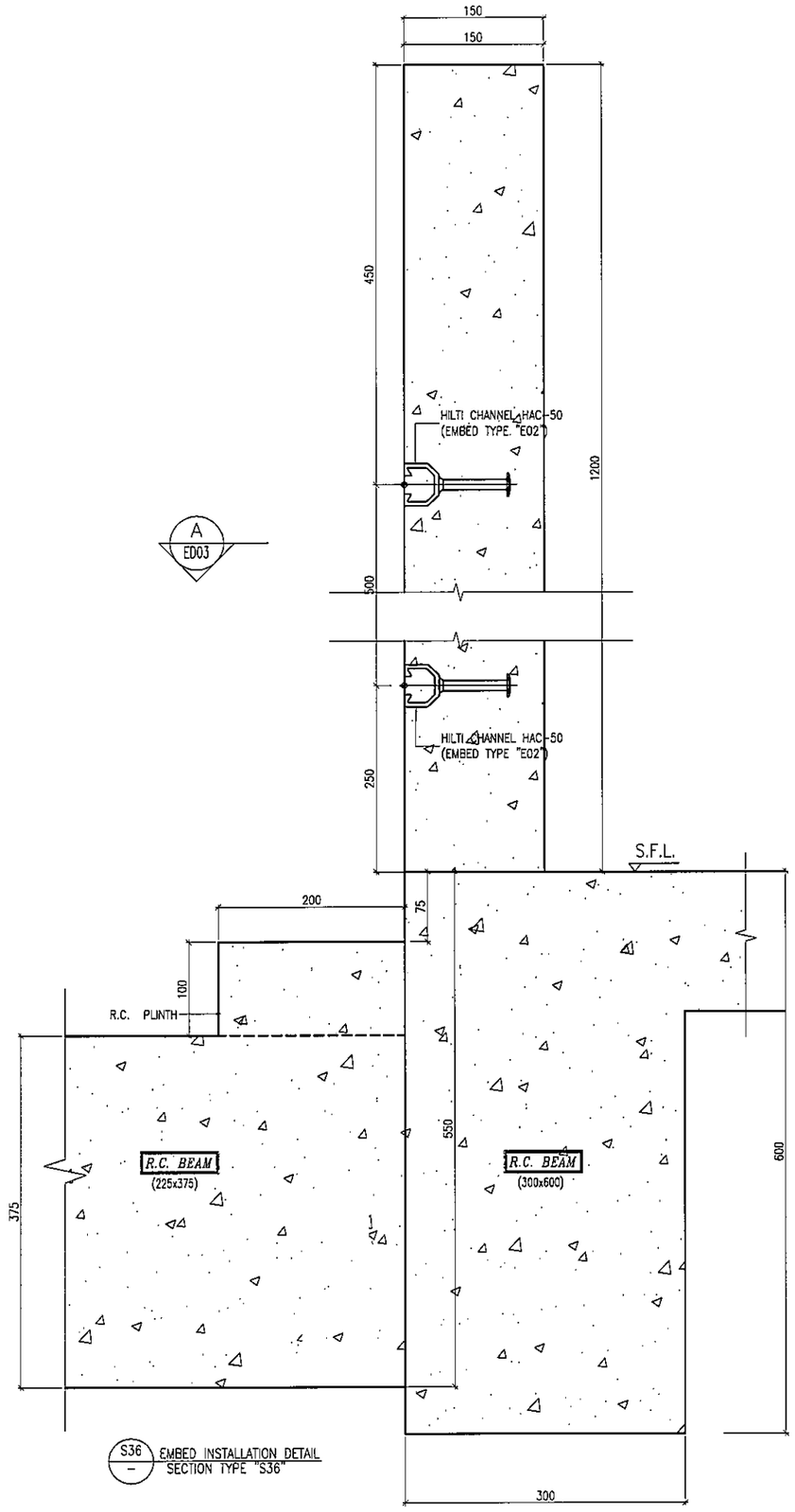

S36 — EMBED INSTALLATION DETAIL
SECTION TYPE "S36"

B.D. REF :

CLIENT :
信和置業有限公司
Sino Land Company Limited

ARCHITECT : WONG TUNG & PARTNERS LIMITED
ARCHITECTS & PLANNERS

MAIN CONTRACTOR :
CR Construction Company Limited

STRUCTURAL ENGINEER :
AECOM

FACADE CONSULTANT:
AECOM

NOTE :
1. ALL DIMENSIONS ARE IN mm.
2. ALL ELEVATIONS ARE VIEWED FROM OUTSIDE.
3. ALL DIMENSIONS TO BE VERIFIED ON SITE BEFORE FABRICATION.

LEGEND :
X1 / X001 — DETAIL MARK NO. / REFER SHEET NO.
1. F.F.L. --FINISHED FLOOR LEVEL
2. S.F.L. --STRUCTURAL FLOOR LEVEL
3. /R --REVERSED DETAIL

NO.	DATE	REVISED	BY
A	20/06/2019	GENERAL REVISED	

JOB NO. : J-837

PROJECT :
URA KWUN TONG TOWN CENTRE
REDEVELOPMENT (AREA 2 & 3) AT
NKIL 6514, KWUN TONG, KWLOON

TITLE :
EMBED TYPICAL DETAILS
FOR CURTAIN WALL

DATE : 18-FEB-19 | SCALE : 1:3 (A1)
DRAWN BY : Asing | CHECKED BY : -

美特鋁質有限公司
MIDI ALUMINIUM FABRICATOR LTD.
Units 6-8, Sunray Industrial Centre, 1/F
610 Cha Kwo Ling Road, Kowloon
Tel:23489211-4 Fax:(852)27727666

DWG NO. : J837-CW-ED15 | REV. : A

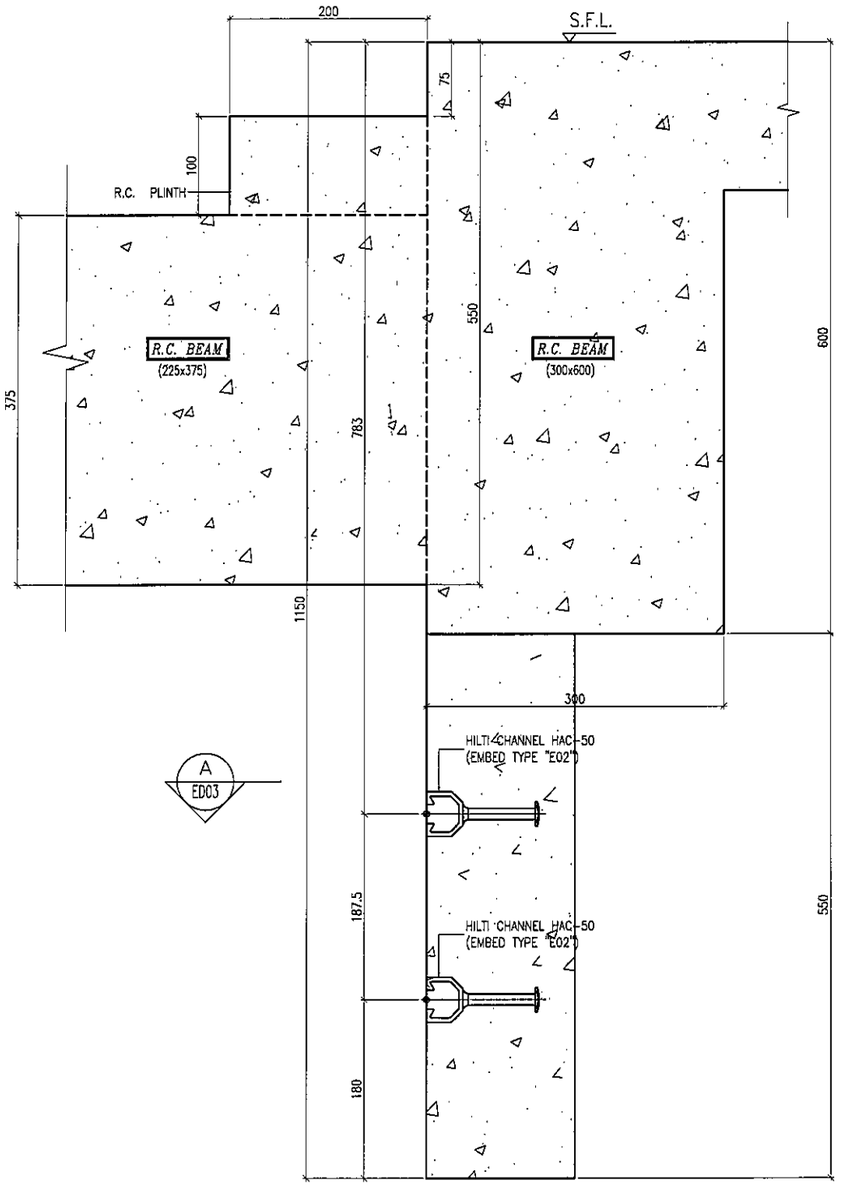

S37 EMBED INSTALLATION DETAIL
SECTION TYPE "S37"

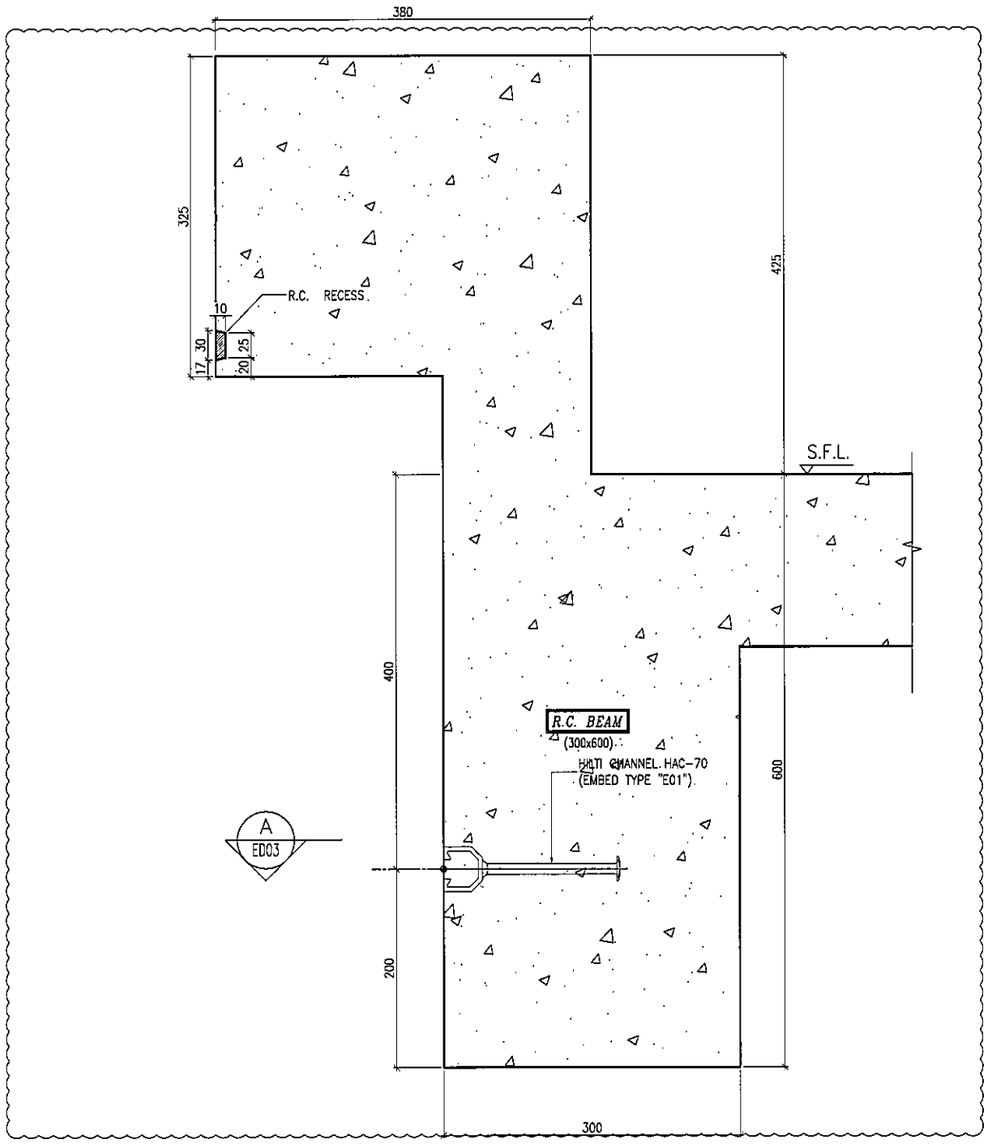

S38 EMBED INSTALLATION DETAIL
SECTION TYPE "S38"

B.D. REF :

CLIENT :
信和置業有限公司
Sino Land Company Limited

ARCHITECT : WONG TUNG & PARTNERS LIMITED
ARCHITECTS & PLANNERS

MAIN CONTRACTOR :
CR Construction Company Limited

STRUCTURAL ENGINEER :
AECOM

FACADE CONSULTANT:
AECOM

NOTE :
1. ALL DIMENSIONS ARE IN mm.
2. ALL ELEVATIONS ARE VIEWED FROM OUTSIDE.
3. ALL DIMENSIONS TO BE VERIFIED ON SITE BEFORE FABRICATION.

LEGEND :
X1 / X001 — DETAIL MARK NO. / REFER SHEET NO.
1. F.F.L. --FINISHED FLOOR LEVEL
2. S.F.L. --STRUCTURAL FLOOR LEVEL
3. /R --REVERSED DETAIL

NO.	DATE	REVISED	BY
A	20/06/2019	GENERAL REVISED	

JOB NO. : J-837

PROJECT :
URA KWUN TONG TOWN CENTRE
REDEVELOPMENT (AREA 2 & 3) AT
NKIL 6514, KWUN TONG, KWLOON

TITLE :
EMBED TYPICAL DETAILS
FOR CURTAIN WALL

DATE : 18-FEB-19 | SCALE : 1:3 (A1)
DRAWN BY : Asing | CHECKED BY : -

美特鋁質有限公司
MIDI ALUMINIUM FABRICATOR LTD.
Units 6-8, Sunray Industrial Centre, 1/F
610 Cha Kwo Ling Road, Kowloon
Tel:23489211-4 Fax:(852)27727666

DWG NO. : J837-CW-ED16 | REV. : A

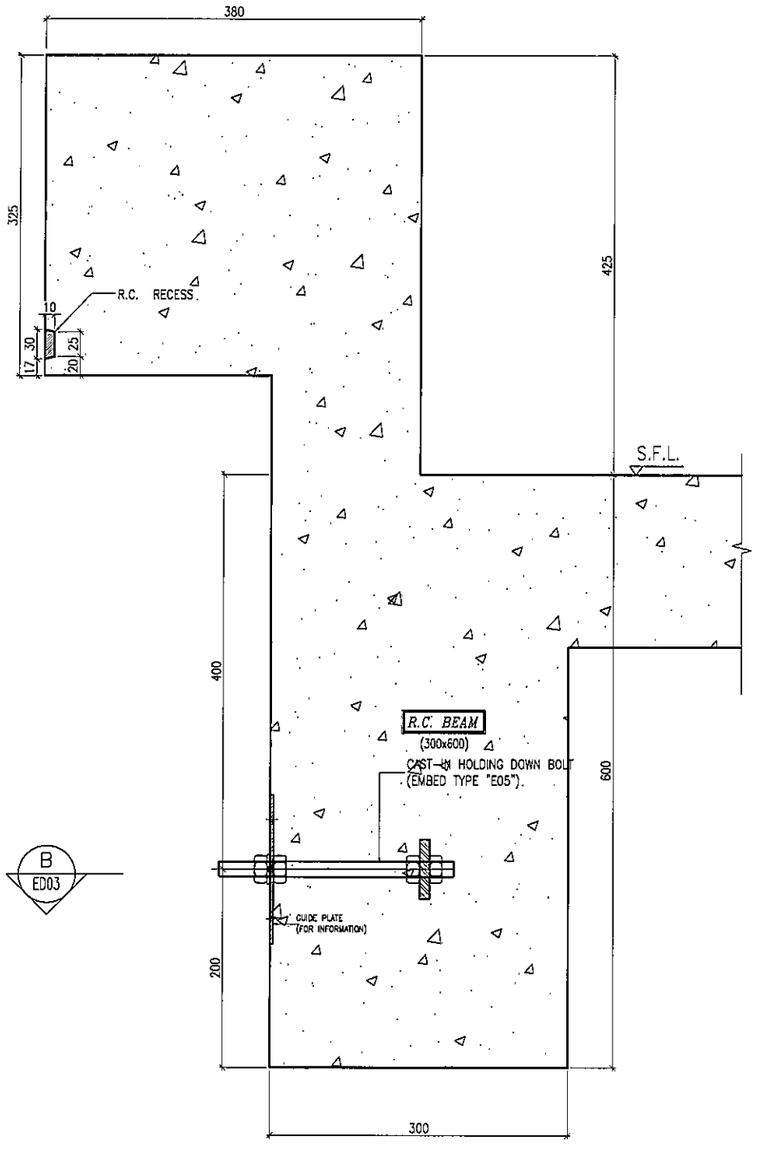

S39 – EMBED INSTALLATION DETAIL
SECTION TYPE "S39"

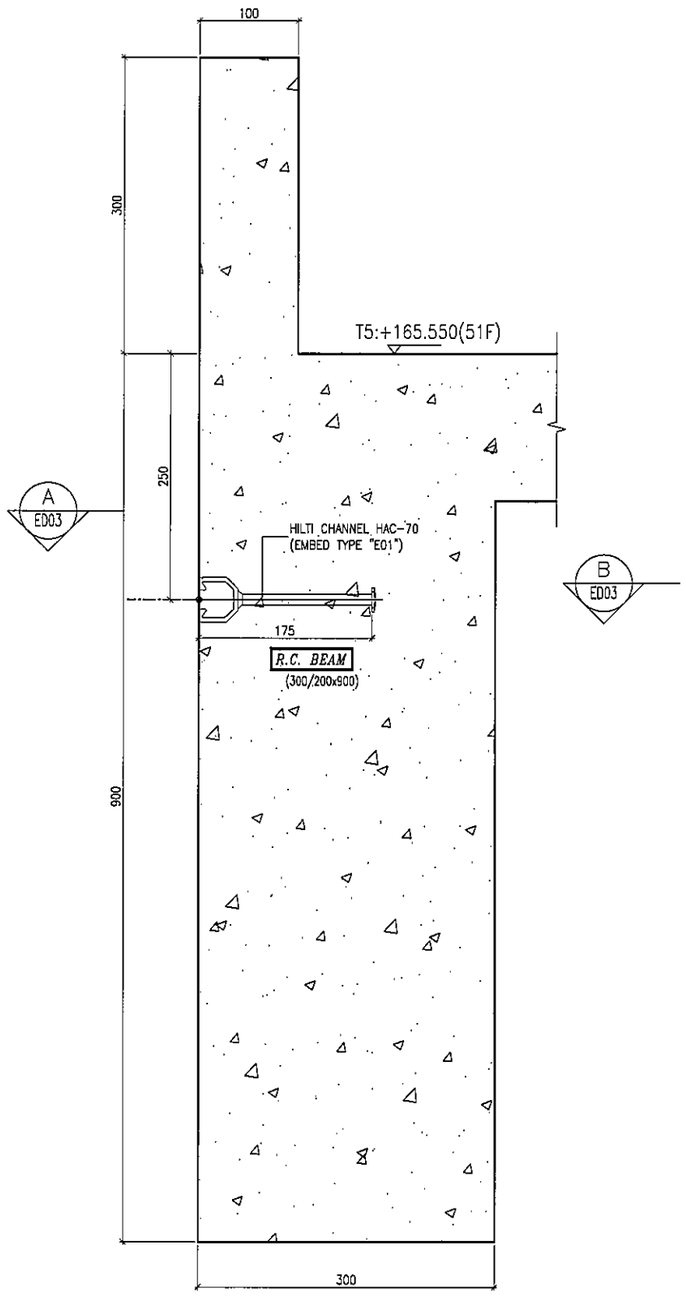

S40 – EMBED INSTALLATION DETAIL
SECTION TYPE "S40"

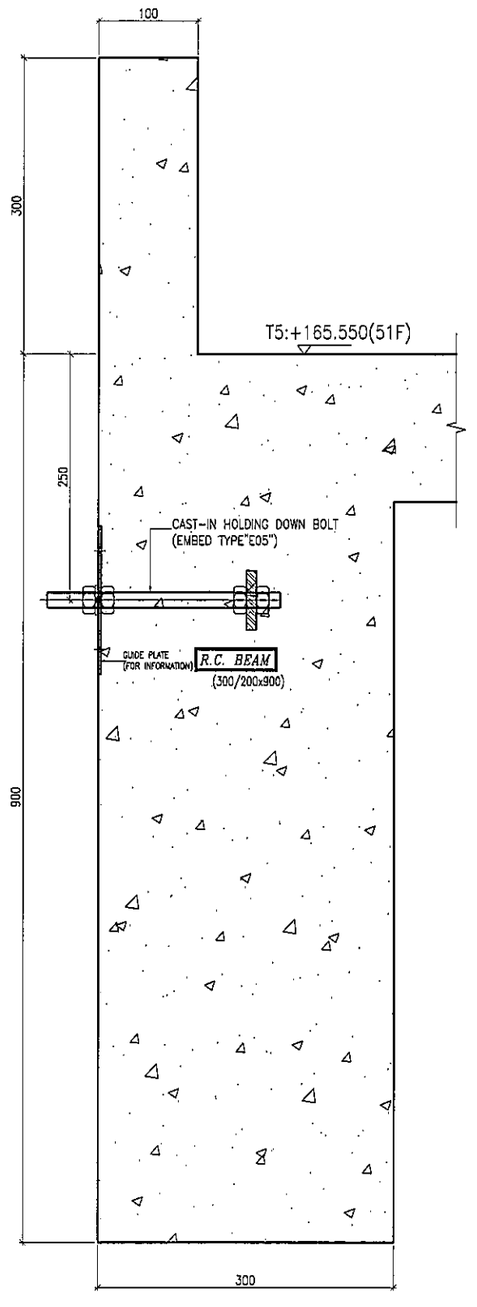

S41 – EMBED INSTALLATION DETAIL
SECTION TYPE "S41"

B.D. REF :

CLIENT :
信和置業有限公司
Sino Land Company Limited

ARCHITECT :
WONG TUNG & PARTNERS LIMITED
ARCHITECTS & PLANNERS

MAIN CONTRACTOR :
CR Construction Company Limited

STRUCTURAL ENGINEER :
AECOM

FACADE CONSULTANT:
AECOM

NOTE :
1. ALL DIMENSIONS ARE IN mm.
2. ALL ELEVATIONS ARE VIEWED FROM OUTSIDE.
3. ALL DIMENSIONS TO BE VERIFIED ON SITE BEFORE FABRICATION.

LEGEND :
X1 / XD01 — DETAIL MARK NO. / REFER SHEET NO.
1. F.F.L. --FINISHED FLOOR LEVEL
2. S.F.L. --STRUCTURAL FLOOR LEVEL
3. /R --REVERSED DETAIL

NO.	DATE	REVISED	BY

JOB NO. : J-837

PROJECT :
URA KWUN TONG TOWN CENTRE
REDEVELOPMENT (AREA 2 & 3) AT
NKIL 6514, KWUN TONG, KWLOON

TITLE :
EMBED TYPICAL DETAILS
FOR CURTAIN WALL

DATE : 24-JUN-19 | SCALE : 1:3 (A1)

DRAWN BY : Asing | CHECKED BY : --

美特鋁質有限公司
MIDI ALUMINIUM FABRICATOR LTD.
Units 6-8, Sunray Industrial Centre, 1/F
610 Cha Kwo Ling Road, Kowloon
Tel:23489211-4 Fax:(852)27727666

DWG NO. : J837-CW-ED17 | REV. : --

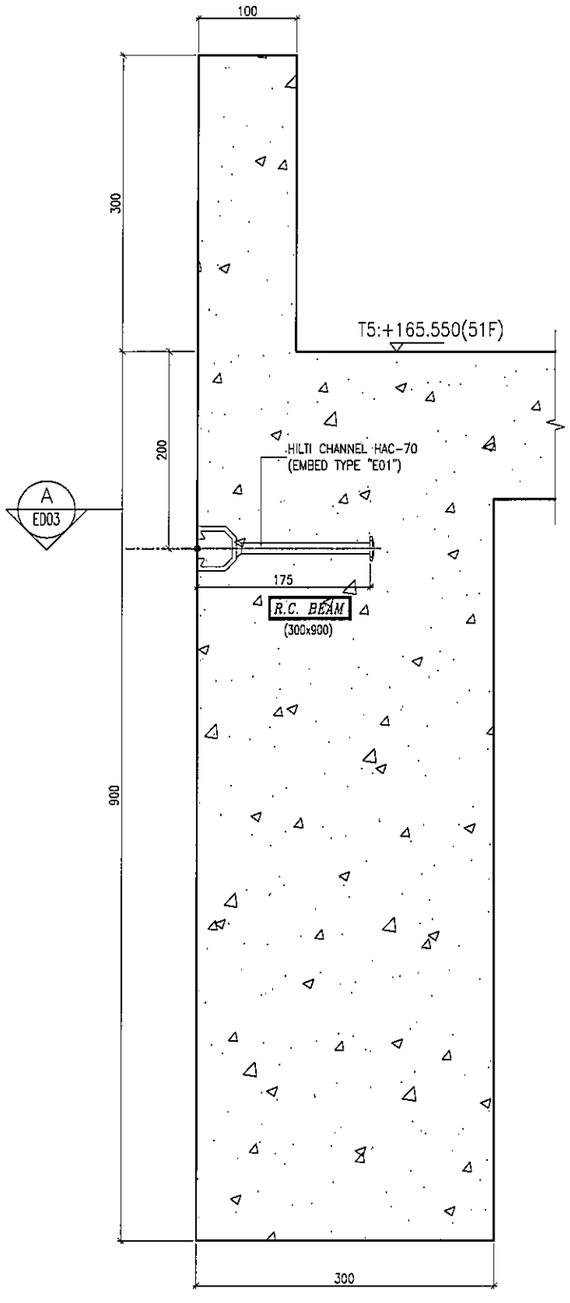

S42 – EMBED INSTALLATION DETAIL
SECTION TYPE "S42"

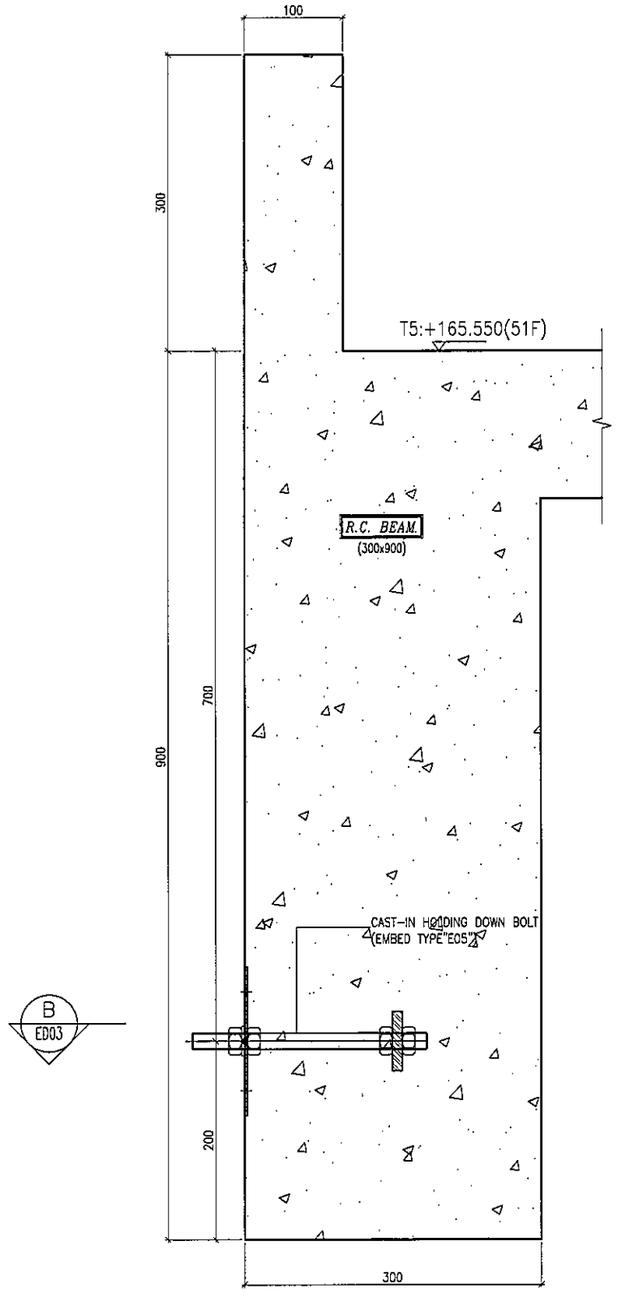

S43 – EMBED INSTALLATION DETAIL
SECTION TYPE "S43"

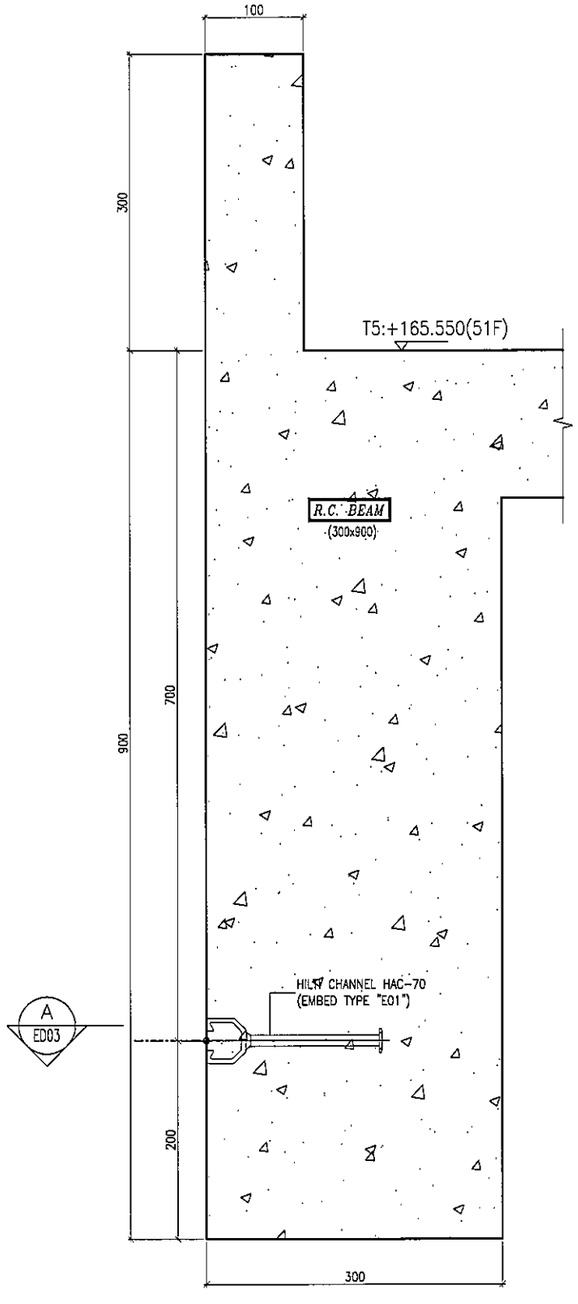

S44 – EMBED INSTALLATION DETAIL
SECTION TYPE "S44"

B.D. REF :

CLIENT :
信和置業有限公司
Sino Land Company Limited

ARCHITECT :
WONG TUNG & PARTNERS LIMITED
ARCHITECTS & PLANNERS

MAIN CONTRACTOR :
CR Construction Company Limited

STRUCTURAL ENGINEER :
AECOM

FACADE CONSULTANT:
AECOM

NOTE :
1. ALL DIMENSIONS ARE IN mm.
2. ALL ELEVATIONS ARE VIEWED FROM OUTSIDE.
3. ALL DIMENSIONS TO BE VERIFIED ON SITE BEFORE FABRICATION.

LEGEND :
X1 / X001 — DETAIL MARK NO. / REFER SHEET NO.
1. F.F.L. --FINISHED FLOOR LEVEL
2. S.F.L. --STRUCTURAL FLOOR LEVEL
3. /R --REVERSED DETAIL

NO.	DATE	REVISED	BY

JOB NO. : J-837

PROJECT :
URA KWUN TONG TOWN CENTRE REDEVELOPMENT (AREA 2 & 3) AT NKIL 6514, KWUN TONG, KWLOON

TITLE :
EMBED TYPICAL DETAILS FOR CURTAIN WALL

DATE : 24-JUN-19	SCALE : 1:3 (A1)
DRAWN BY : Asing	CHECKED BY : -

美特鋁質有限公司
MIDI ALUMINIUM FABRICATOR LTD.
Units 6-8, Sunray Industrial Centre, 1/F
610 Cha Kwo Ling Road, Kowloon
Tel:23489211-4 Fax:(852)27727666

DWG NO. : J837-CW-ED18 | REV. : -

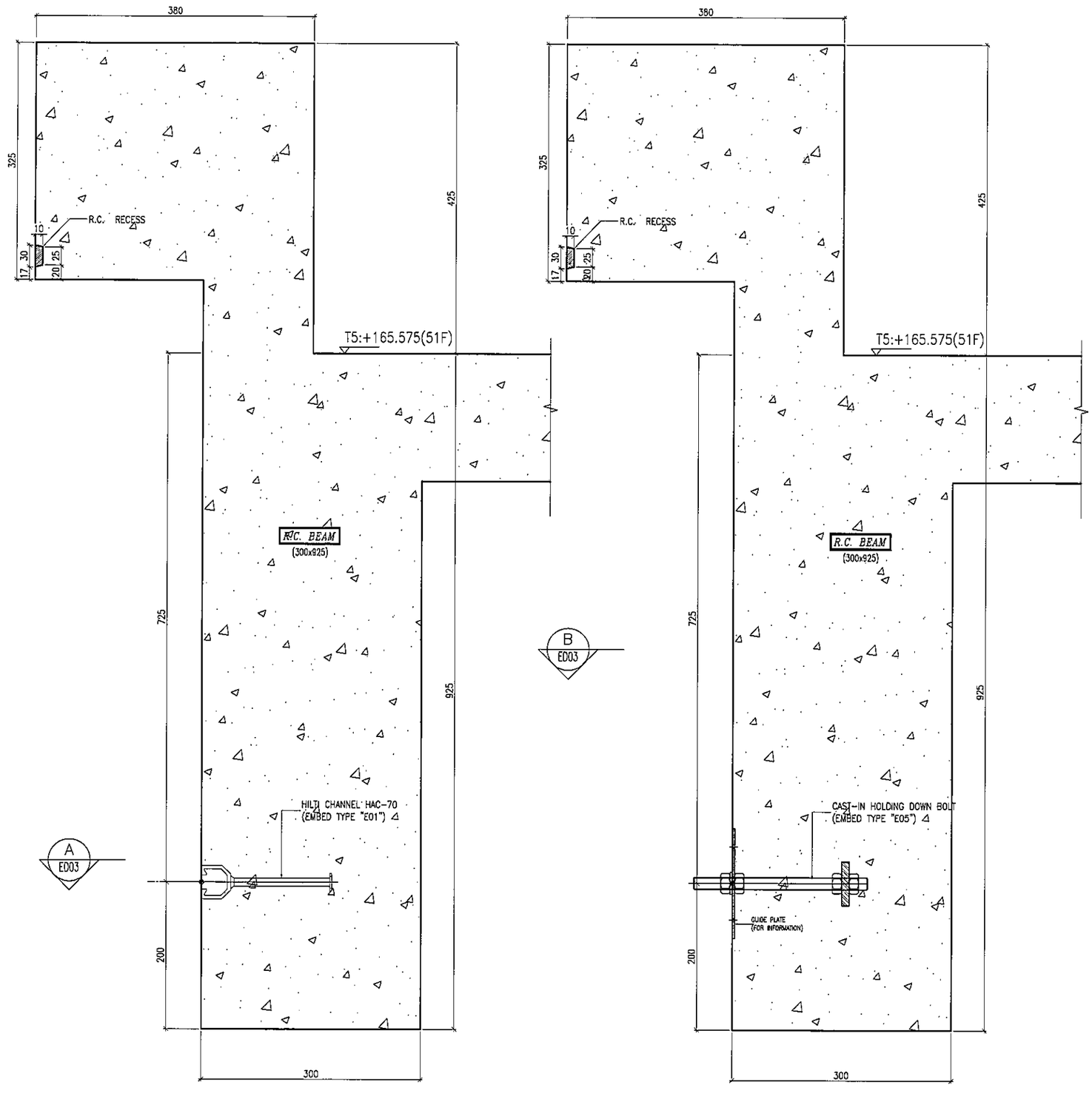

S45 / – EMBED INSTALLATION DETAIL
SECTION TYPE "S45"

S46 / – EMBED INSTALLATION DETAIL
SECTION TYPE "S46"

B.D. REF :

CLIENT :
信和置業有限公司
Sino Land Company Limited

ARCHITECT :
WONG TUNG & PARTNERS LIMITED
ARCHITECTS & PLANNERS

MAIN CONTRACTOR :
CR Construction Company Limited

STRUCTURAL ENGINEER :
AECOM

FACADE CONSULTANT:
AECOM

NOTE :
1. ALL DIMENSIONS ARE IN mm.
2. ALL ELEVATIONS ARE VIEWED FROM OUTSIDE.
3. ALL DIMENSIONS TO BE VERIFIED ON SITE BEFORE FABRICATION.

LEGEND :
X1 / X001 — DETAIL MARK NO. / REFER SHEET NO.
1. F.F.L. --FINISHED FLOOR LEVEL
2. S.F.L. --STRUCTURAL FLOOR LEVEL
3. /R --REVERSED DETAIL

NO.	DATE	REVISED	BY

JOB NO. : J-837

PROJECT :
URA KWUN TONG TOWN CENTRE REDEVELOPMENT (AREA 2 & 3) AT NKIL 6514, KWUN TONG, KWLOON

TITLE :
EMBED TYPICAL DETAILS FOR CURTAIN WALL

DATE : 24-JUN-19 | SCALE : 1:3 (A1)

DRAWN BY : Asing | CHECKED BY : –

美特鋁質有限公司
MIDI ALUMINIUM FABRICATOR LTD.
Units 6-8, Sunray Industrial Centre, 1/F
610 Cha Kwo Ling Road, Kowloon
Tel:23489211-4 Fax:(852)27727666

DWG NO. : J837-CW-ED19 | REV. : –

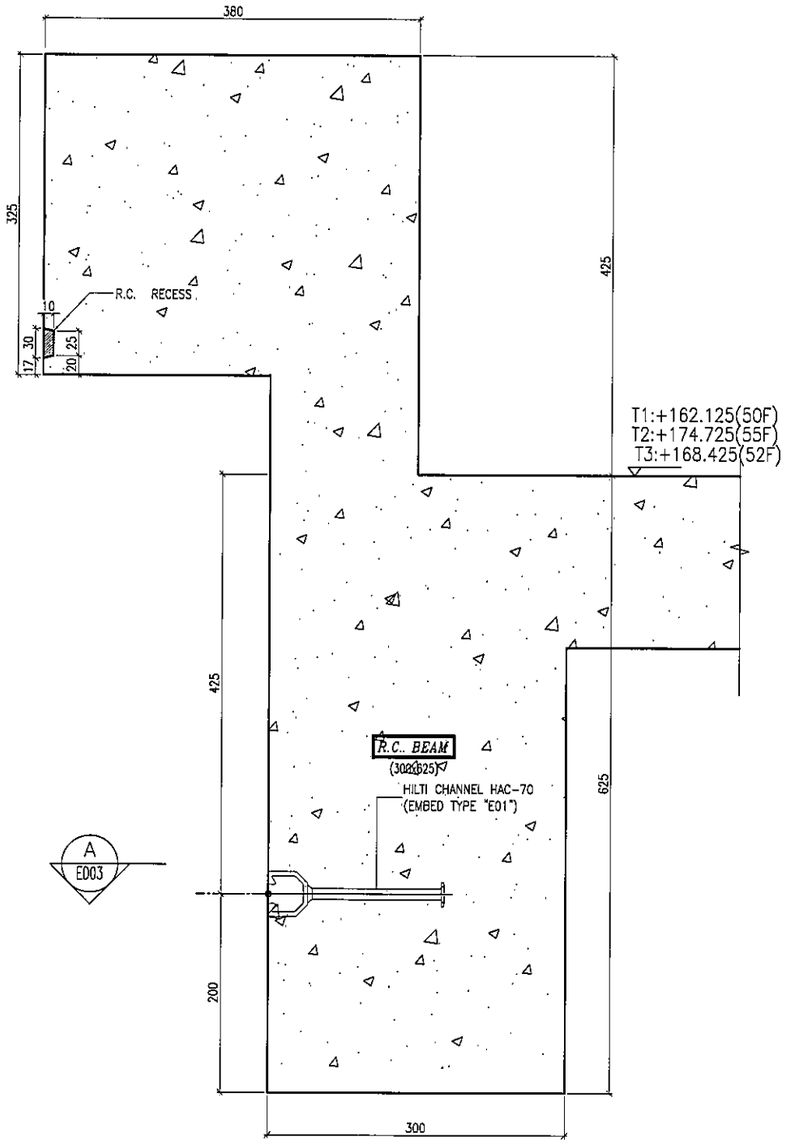

S47 – EMBED INSTALLATION DETAIL SECTION TYPE "S47"

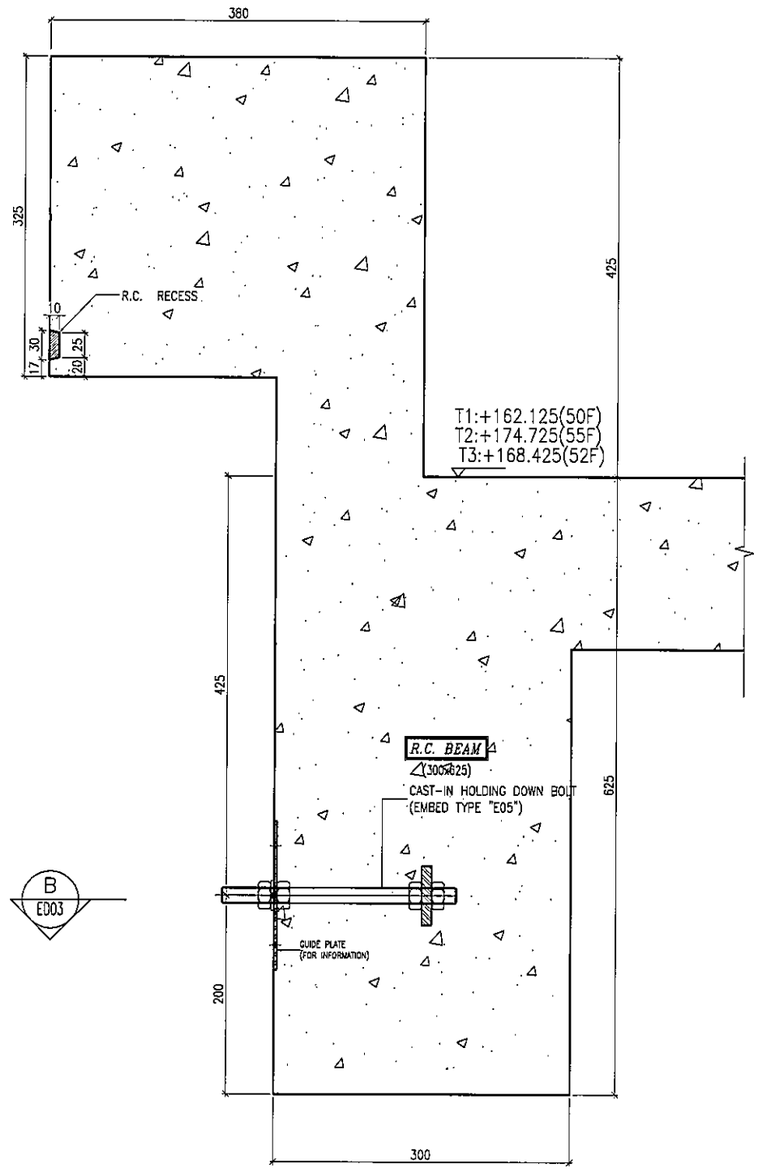

S48 – EMBED INSTALLATION DETAIL SECTION TYPE "S48"

B.D. REF :

CLIENT :
信和置業有限公司
Sino Land Company Limited

ARCHITECT :
WONG TUNG & PARTNERS LIMITED
ARCHITECTS & PLANNERS

MAIN CONTRACTOR :
CR Construction Company Limited

STRUCTURAL ENGINEER :
AECOM

FACADE CONSULTANT:
AECOM

NOTE :
1. ALL DIMENSIONS ARE IN mm.
2. ALL ELEVATIONS ARE VIEWED FROM OUTSIDE.
3. ALL DIMENSIONS TO BE VERIFIED ON SITE BEFORE FABRICATION.

LEGEND :
- X1 / XDG1 — DETAIL MARK NO. / REFER SHEET NO.
1. F.F.L. --FINISHED FLOOR LEVEL
2. S.F.L. --STRUCTURAL FLOOR LEVEL
3. /R --REVERSED DETAIL

NO.	DATE	REVISED	BY

JOB NO. : J-837

PROJECT :
URA KWUN TONG TOWN CENTRE REDEVELOPMENT (AREA 2 & 3) AT NKIL 6514, KWUN TONG, KWLOON

TITLE :
EMBED TYPICAL DETAILS FOR CURTAIN WALL

DATE : 24-JUN-19 | SCALE : 1:3 (A1)

DRAWN BY : Asing | CHECKED BY : -

美特鋁質有限公司
MIDI ALUMINIUM FABRICATOR LTD.
Units 6-8, Sunray Industrial Centre, 1/F
610 Cha Kwo Ling Road, Kowloon
Tel:23489211-4 Fax:(852)27727666

DWG NO. : J837-CW-ED20 | REV. : -

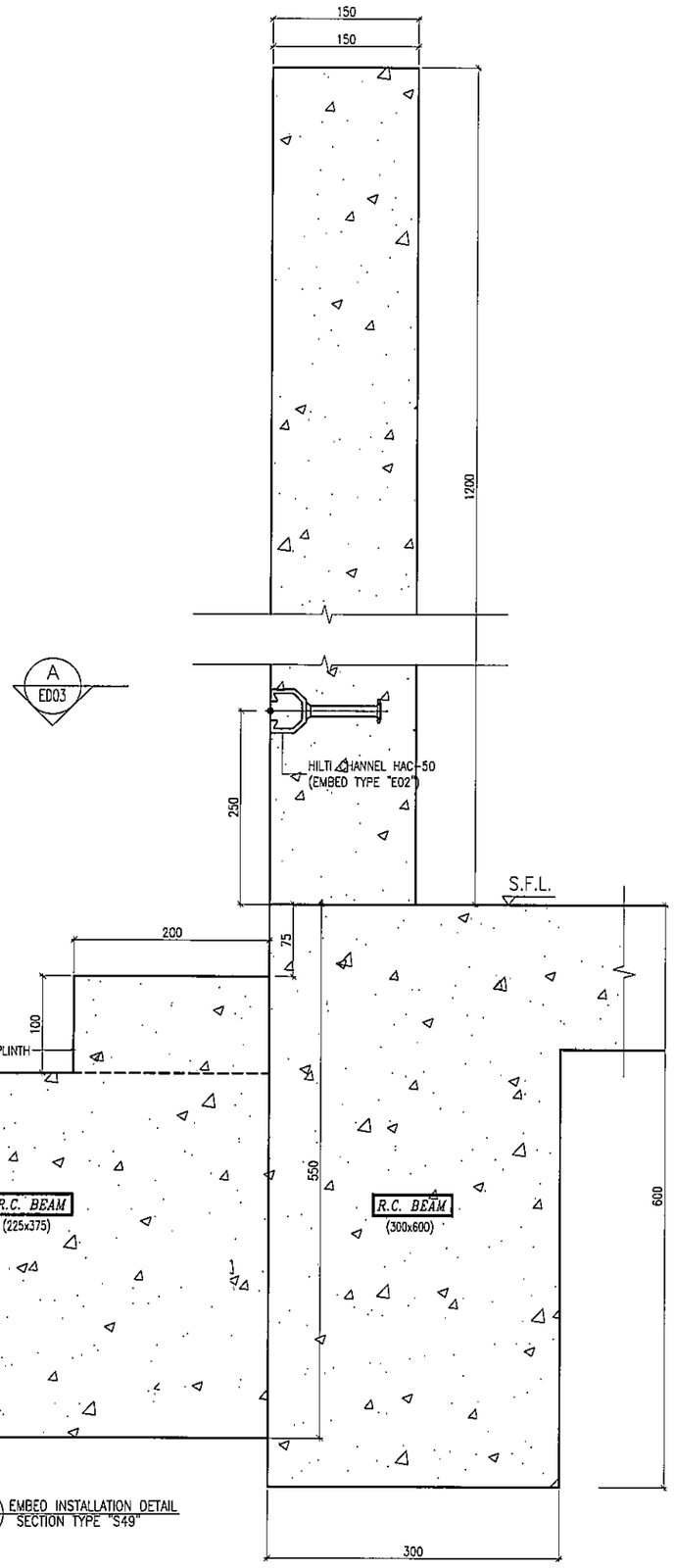

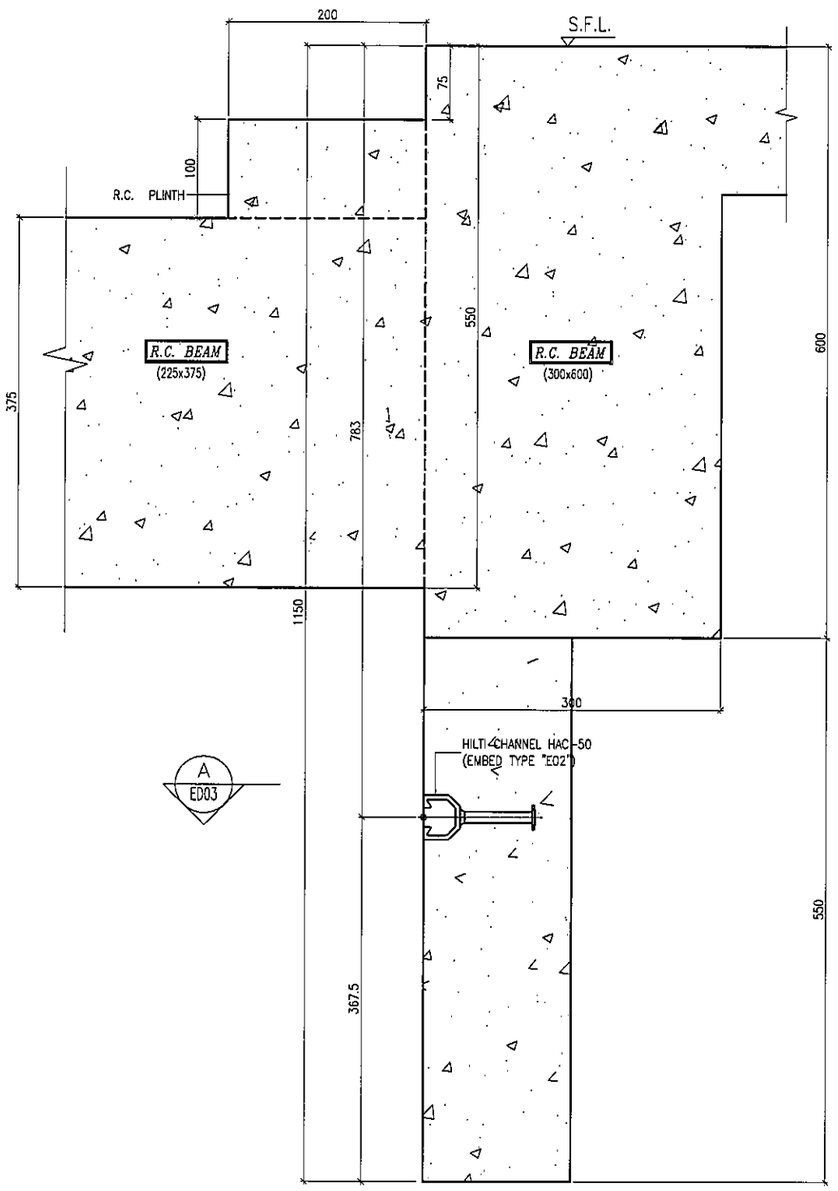

B.D. REF :

CLIENT :
信和置業有限公司
Sino Land Company Limited

ARCHITECT :
WONG TUNG & PARTNERS LIMITED
ARCHITECTS & PLANNERS

MAIN CONTRACTOR :
CR Construction Company Limited

STRUCTURAL ENGINEER :
AECOM

FACADE CONSULTANT:
AECOM

NOTE :
1. ALL DIMENSIONS ARE IN mm.
2. ALL ELEVATIONS ARE VIEWED FROM OUTSIDE.
3. ALL DIMENSIONS TO BE VERIFIED ON SITE BEFORE FABRICATION.

LEGEND :
X1 / X001 — DETAIL MARK NO. / REFER SHEET NO.
1. F.F.L. --FINISHED FLOOR LEVEL
2. S.F.L. --STRUCTURAL FLOOR LEVEL
3. /R --REVERSED DETAIL

NO.	DATE	REVISED	BY

JOB NO. : J-837

PROJECT :
URA KWUN TONG TOWN CENTRE REDEVELOPMENT (AREA 2 & 3) AT NKIL 6514, KWUN TONG, KWLOON

TITLE :
EMBED TYPICAL DETAILS FOR CURTAIN WALL

DATE : 18-AUG-19	SCALE : 1:3 (A1)
DRAWN BY : Asing	CHECKED BY : -

美特鋁質有限公司
MIDI ALUMINIUM FABRICATOR LTD.
Units 6-8, Sunray Industrial Centre, 1/F
610 Cha Kwo Ling Road, Kowloon
Tel:23489211-4 Fax:(852)27727666

DWG NO. : J837-CW-ED21 | REV. : -

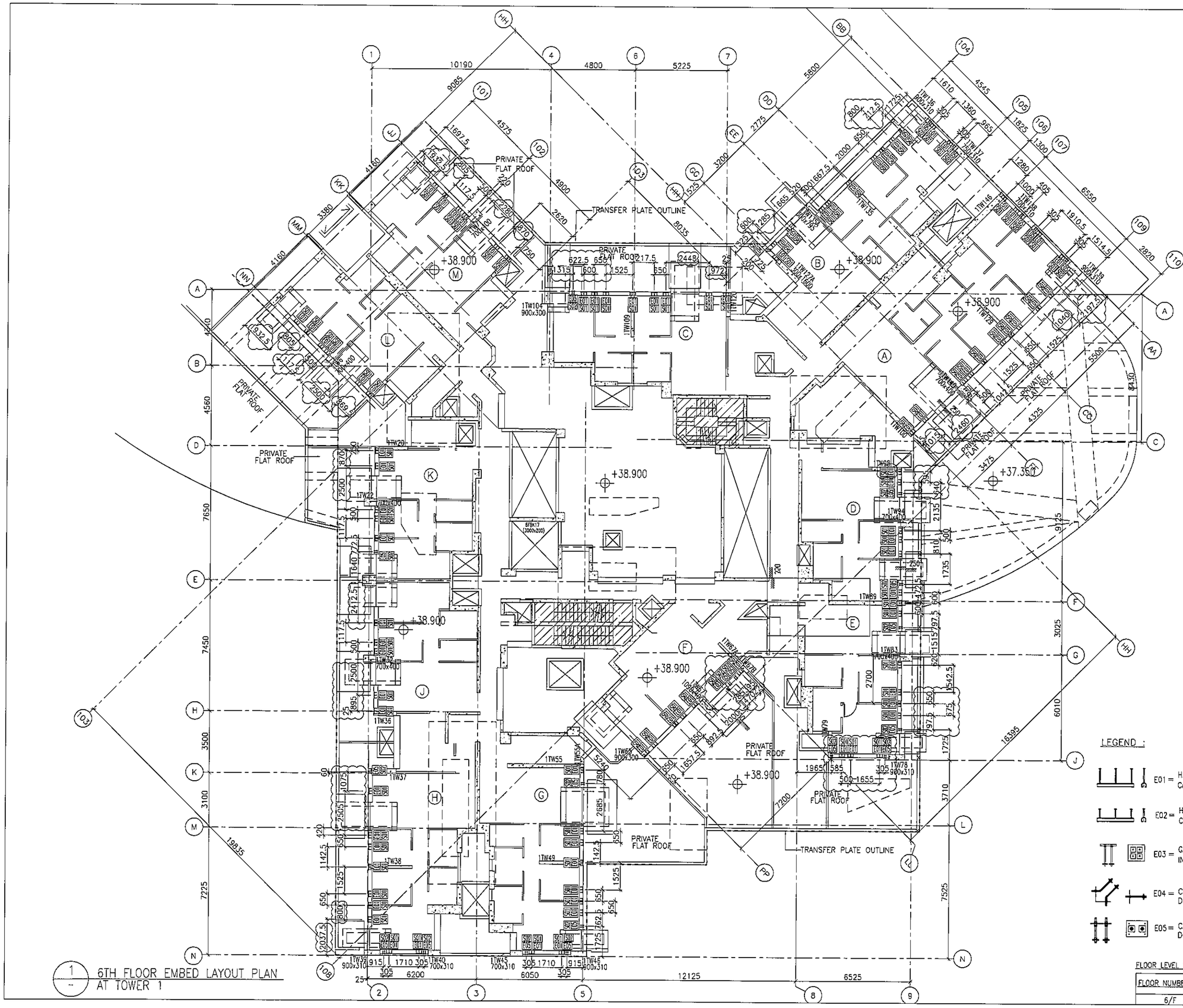
PRIVATE FLAT ROOF
TRANSFER PLATE OUTLINE
+38.900
+37.350
10190
4800
5225
9085
4575
4900
2620
8035
5800
3200
2775
4160
3380
4560
7650
7450
3500
3100
7225
19835
12125
6525
6200
6050
16395
7525
6010
3025
9125
4325
5500
7200
3710
2700
1TW104 900x300
1TW45 700x310
1TW46 900x310
1TW39 900x310
1TW40 700x310
1TW45A 900x310
1TW78 900x310
1TW94 700x410
1TW98 700x400
1TW99 700x400
1TW100 700x400
1TW127A 900x310
1TW127B 900x310
1TW128 900x310
1TW129 900x310
1TW135 900x310
1TW136 900x310
1TW137 900x310
1TW138 900x310
1TW146 900x310
1TW147 900x310
1TW148 900x310
1TW149 900x310
1TW150 900x310
1TW151 900x310
1TW152 900x310
1TW153 900x310
1TW154 900x310
1TW155 900x310
1TW156 900x310
1TW157 900x310
1TW158 900x310
1TW159 900x310
1TW160 900x310
1TW161 900x310
1TW162 900x310
1TW163 900x310
1TW164 900x310
1TW165 900x310

LEGEND :

- E01 = HILIT , HAC-70 CAST IN CHANNEL
- E02 = HILIT , HAC-50 CAST IN CHANNEL
- E03 = GAL. MILD STEEL CAST IN EMBED
- E04 = CAST-IN HOLDING DOWN BOLT
- E05 = CAST-IN HOLDING DOWN BOLT

USED ONLY ON THE 7TH BOTTOM

USED ONLY ON THE 7TH BOTTOM

USED ONLY ON THE 7TH BOTTOM

USED ONLY ON THE 7TH BOTTOM

USED ONLY ON THE 7TH BOTTOM

USED ONLY ON THE 7TH BOTTOM

USED ONLY ON THE 7TH BOTTOM

USED ONLY ON THE 7TH BOTTOM

USED ONLY ON THE 7TH BOTTOM

USED ONLY ON THE 7TH BOTTOM

USED ONLY ON THE 7TH BOTTOM

USED ONLY ON THE 7TH BOTTOM

1 / - TYPICAL FLOOR EMBED LAYOUT PLAN AT TOWER 1

FLOOR LEVEL (S.F.L.)(T1)

FLOOR NUMBERING	LEVEL (mPD)
7F	42.400
8F	45.550
9F	48.700
10F	51.850
11F	55.000
12F	58.150
15F	61.300
16F	64.450
17F	67.600
18F	70.750
19F	73.900
20F	77.050
21F	80.200
22F	83.350
23F	86.500
25F	89.650
26F	92.800
29F	102.250
30F	105.400
31F	108.550
32F	111.700
33F	114.850
35F	118.000
36F	121.150
37F	124.300
38F	127.450
39F	130.600
40F	133.750
41F	136.900
42F	140.050
43F	143.100
45F	146.350
46F	149.500
47F	152.650
48F	155.800
49F	158.950

B.D. REF :

CLIENT : 信和置業有限公司 Sino Land Company Limited

ARCHITECT : WONG TUNG & PARTNERS LIMITED ARCHITECTS & PLANNERS

MAIN CONTRACTOR : CR Construction Company Limited

STRUCTURAL ENGINEER : AECOM

FACADE CONSULTANT: AECOM

NOTE :
1. ALL DIMENSIONS ARE IN mm.
2. ALL ELEVATIONS ARE VIEWED FROM OUTSIDE.
3. ALL DIMENSIONS TO BE VERIFIED ON SITE BEFORE FABRICATION.

LEGEND :
- (X1 / X001) — DETAIL MARK NO. / REFER SHEET NO.

1. F.F.L. --FINISHED FLOOR LEVEL
2. S.F.L. --STRUCTURAL FLOOR LEVEL
3. (/R) --REVERSED DETAIL

NO.	DATE	REVISED	BY
L	18/08/2019	GENERAL REVISED	
K	16/07/2019	GENERAL REVISED	
J	07/04/2019	GENERAL REVISED	
I	28/01/2019	GENERAL REVISED	
H	19/01/2019	GENERAL REVISED	
G	22/12/2018	GENERAL REVISED	
F	01/12/2018	GENERAL REVISED	
E	08/11/2018	GENERAL REVISED	
D	13/10/2018	GENERAL REVISED	
C	14/9/2018	GENERAL REVISED	
B	23/8/2018	GENERAL REVISED	
A	31/7/2018	GENERAL REVISED	

JOB NO. : J-837

PROJECT : URA KWUN TONG TOWN CENTRE REDEVELOPMENT (AREA 2 & 3) AT NKIL 6514, KWUN TONG, KWLOON

TITLE : TYPICAL FLOOR EMBED LAYOUT PLAN OF CURTAIN WALL AT TOWER 1

DATE : 04-JUL-18 | SCALE : 1:100 (A1)

DRAWN BY : ASING | CHECKED BY : -

美特鋁製有限公司 MIDI ALUMINIUM FABRICATOR LTD.
Units 6-8, Sunray Industrial Centre, 1/F
610 Cha Kwo Ling Road, Kowloon
Tel:23489211-4 Fax:(852)27727666

DWG NO. : J837-CW-1102 | REV. : L

LEGEND :

- E01 = HILIT , HAC-70 CAST IN CHANNEL
- E02 = HILIT , HAC-50 CAST IN CHANNEL
- E03 = GAL. MILD STEEL CAST IN EMBED
- E04 = CAST-IN HOLDING DOWN BOLT
- E05 = CAST-IN HOLDING DOWN BOLT
- E06 = CAST-IN HOLDING DOWN BOLT
- E07 = CAST-IN HOLDING DOWN BOLT

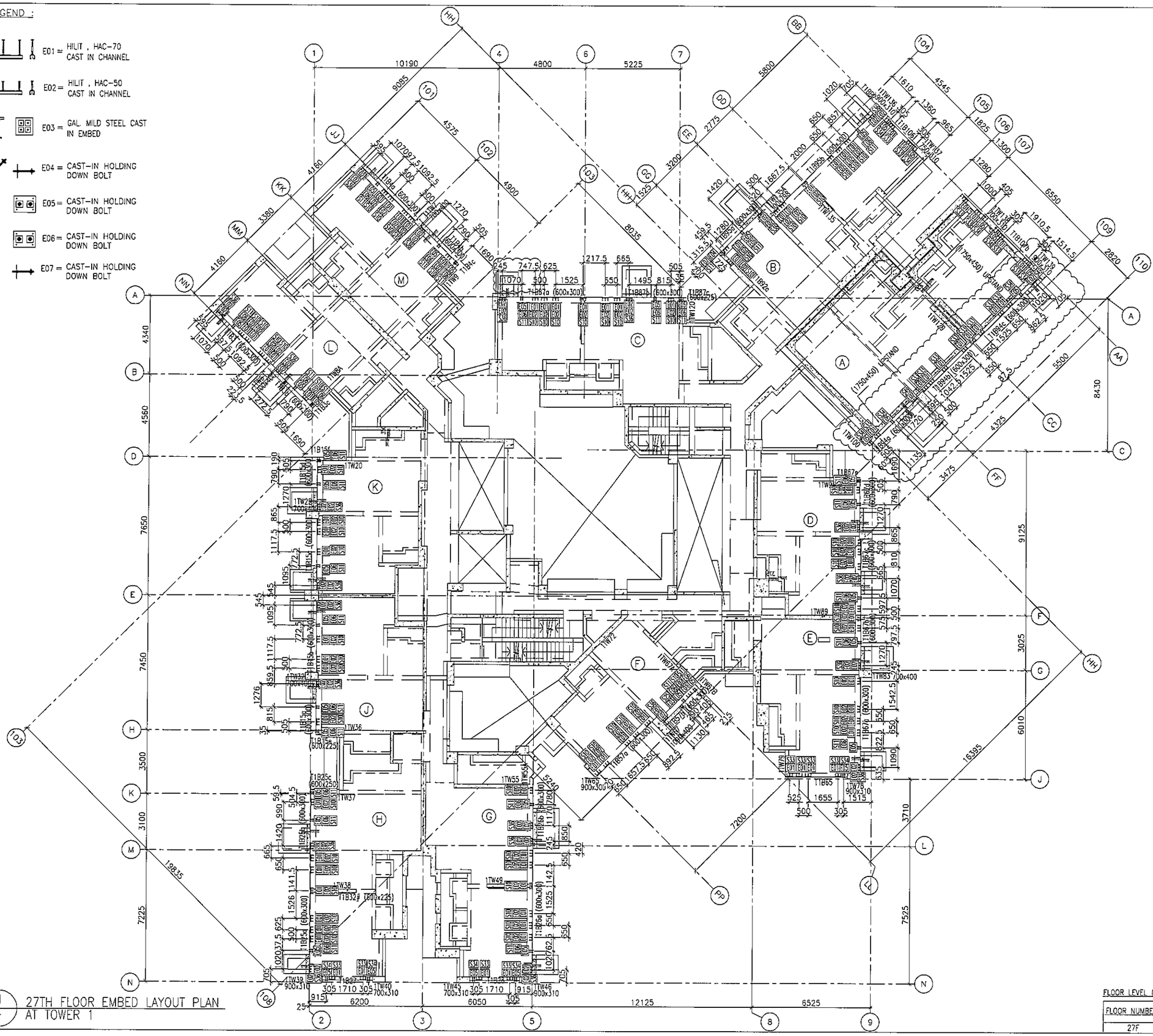

1/- 27TH FLOOR EMBED LAYOUT PLAN AT TOWER 1

FLOOR LEVEL (S.F.L.)(T1)

FLOOR NUMBERING	LEVEL (mPD)
27F	+95.95

B.D. REF :

CLIENT :
信和置業有限公司
Sino Land Company Limited

ARCHITECT :
WONG TUNG & PARTNERS LIMITED
ARCHITECTS & PLANNERS

MAIN CONTRACTOR :
CR Construction Company Limited

STRUCTURAL ENGINEER :
AECOM

FACADE CONSULTANT:
AECOM

NOTE :
1. ALL DIMENSIONS ARE IN mm.
2. ALL ELEVATIONS ARE VIEWED FROM OUTSIDE.
3. ALL DIMENSIONS TO BE VERIFIED ON SITE BEFORE FABRICATION.

LEGEND :
- X1 / X001 — DETAIL MARK NO. / REFER SHEET NO.

1. F.F.L. --FINISHED FLOOR LEVEL
2. S.F.L. --STRUCTURAL FLOOR LEVEL
3. /R --REVERSED DETAIL

NO.	DATE	REVISED	BY
J	18/08/2019	GENERAL REVISED	
I	07/04/2019	GENERAL REVISED	
H	21/02/2019	GENERAL REVISED	
G	19/01/2019	GENERAL REVISED	
F	22/12/2018	GENERAL REVISED	
E	01/12/2018	GENERAL REVISED	
D	08/11/2018	GENERAL REVISED	
C	13/10/2018	GENERAL REVISED	
B	14/9/2018	GENERAL REVISED	
A	07/9/2018	GENERAL REVISED	

JOB NO. : J-837

PROJECT :
URA KWUN TONG TOWN CENTRE REDEVELOPMENT (AREA 2 & 3) AT NKIL 6514, KWUN TONG, KWLOON

TITLE :
27TH FLOOR EMBED LAYOUT PLAN OF CURTAIN WALL AT TOWER 1

DATE : 10-SEP-18 | SCALE : 1:100 (A1)

DRAWN BY : ASING | CHECKED BY : -

美特鋁製有限公司
MIDI ALUMINIUM FABRICATOR LTD.
Units 6-8, Sunray Industrial Centre, 1/F
610 Cha Kwo Ling Road, Kowloon
Tel:23489211-4 Fax:(852)27727666

DWG NO. : J837-CW-1103 | REV. : J

LEGEND :

- E01 = HILIT , HAC-70 CAST IN CHANNEL
- E02 = HILIT , HAC-50 CAST IN CHANNEL
- E03 = GAL. MILD STEEL CAST IN EMBED
- E04 = CAST-IN HOLDING DOWN BOLT
- E05 = CAST-IN HOLDING DOWN BOLT

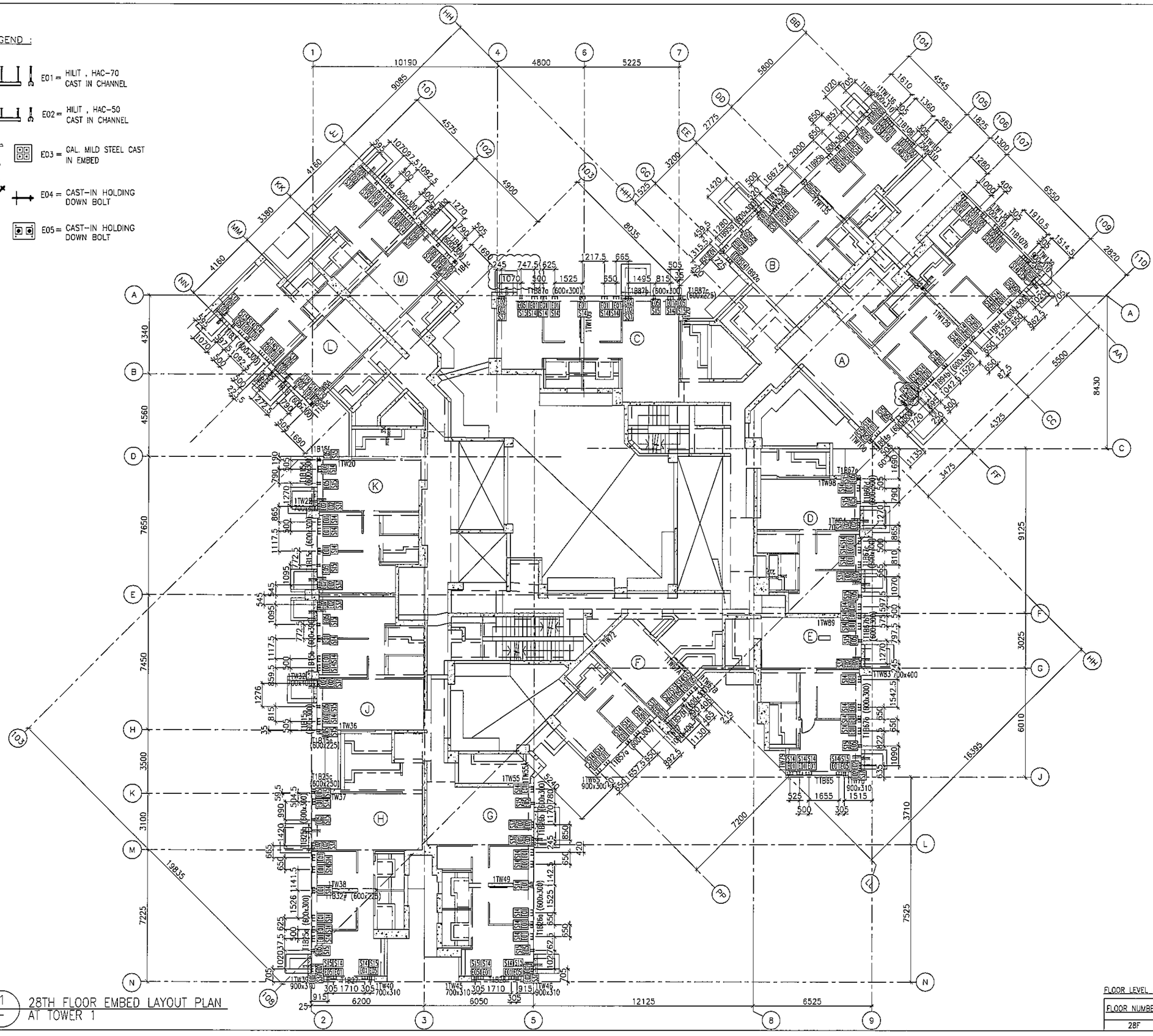

1/- 28TH FLOOR EMBED LAYOUT PLAN AT TOWER 1

FLOOR LEVEL (S.F.L)(T1)

FLOOR NUMBERING	LEVEL (mPD)
28F	+99.100

B.D. REF :

CLIENT : 信和置業有限公司 Sino Land Company Limited

ARCHITECT : WONG TUNG & PARTNERS LIMITED ARCHITECTS & PLANNERS

MAIN CONTRACTOR : CR Construction Company Limited

STRUCTURAL ENGINEER : AECOM

FACADE CONSULTANT: AECOM

NOTE :
1. ALL DIMENSIONS ARE IN mm.
2. ALL ELEVATIONS ARE VIEWED FROM OUTSIDE.
3. ALL DIMENSIONS TO BE VERIFIED ON SITE BEFORE FABRICATION.

LEGEND :
- X1 / X001 — DETAIL MARK NO. / REFER SHEET NO.
1. F.F.L. --FINISHED FLOOR LEVEL
2. S.F.L. --STRUCTURAL FLOOR LEVEL
3. /R --REVERSED DETAIL

NO.	DATE	REVISED	BY
I	18/08/2019	GENERAL REVISED	
H	07/04/2019	GENERAL REVISED	
G	21/02/2019	GENERAL REVISED	
F	19/01/2019	GENERAL REVISED	
E	22/12/2018	GENERAL REVISED	
D	01/12/2018	GENERAL REVISED	
C	08/11/2018	GENERAL REVISED	
B	13/10/2018	GENERAL REVISED	
A	14/9/2018	GENERAL REVISED	

JOB NO. : J-837

PROJECT : URA KWUN TONG TOWN CENTRE REDEVELOPMENT (AREA 2 & 3) AT NKIL 6514, KWUN TONG, KWLOON

TITLE : 28TH FLOOR EMBED LAYOUT PLAN OF CURTAIN WALL AT TOWER 1

DATE : 10-SEP-18 | SCALE : 1:100 (A1)

DRAWN BY : ASING | CHECKED BY : -

美特鋁質有限公司 MIDI ALUMINIUM FABRICATOR LTD.
Units 6-8, Sunray Industrial Centre, 1/F
610 Cha Kwo Ling Road, Kowloon
Tel:23489211-4 Fax:(852)27727666

DWG NO. : J837-CW-1104 | REV. : I

LEGEND :

- EO1 = HILIT , HAC-70 CAST IN CHANNEL
- EO2 = HILIT , HAC-50 CAST IN CHANNEL
- EO3 = GAL. MILD STEEL CAST IN EMBED
- EO4 = CAST-IN HOLDING DOWN BOLT
- EO5 = CAST-IN HOLDING DOWN BOLT

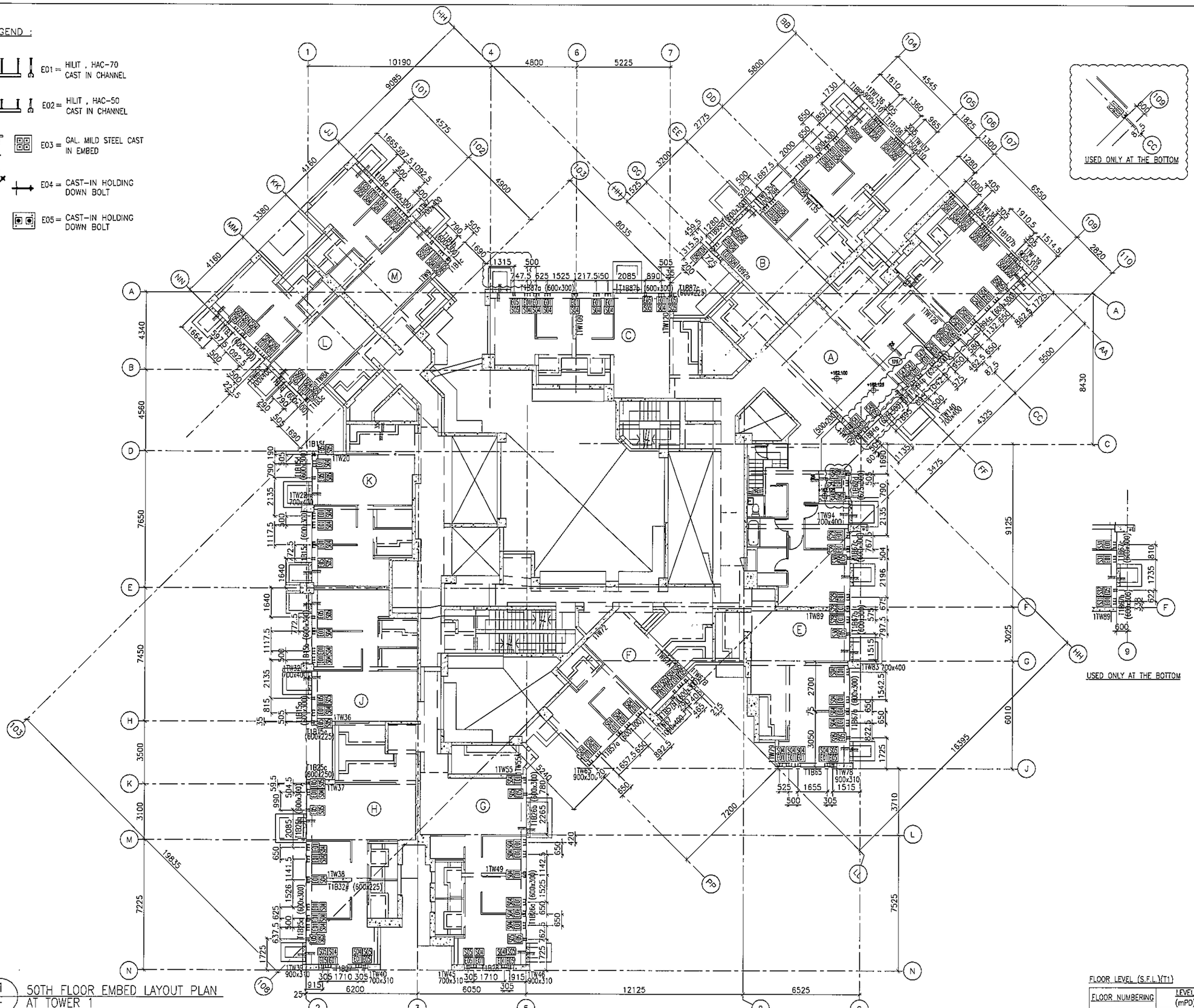

1 / - 50TH FLOOR EMBED LAYOUT PLAN AT TOWER 1

FLOOR LEVEL (S.F.L.)(T1)

FLOOR NUMBERING	LEVEL (mPD)
50F	+162.100

B.D. REF :

CLIENT : 信和置業有限公司 Sino Land Company Limited

ARCHITECT : WONG TUNG & PARTNERS LIMITED ARCHITECTS & PLANNERS

MAIN CONTRACTOR : CR Construction Company Limited

STRUCTURAL ENGINEER : AECOM

FACADE CONSULTANT: AECOM

NOTE :
1. ALL DIMENSIONS ARE IN mm.
2. ALL ELEVATIONS ARE VIEWED FROM OUTSIDE.
3. ALL DIMENSIONS TO BE VERIFIED ON SITE BEFORE FABRICATION.

LEGEND :
- X1 / X001 — DETAIL MARK NO. / REFER SHEET NO.
1. F.F.L. --FINISHED FLOOR LEVEL
2. S.F.L. --STRUCTURAL FLOOR LEVEL
3. /R --REVERSED DETAIL

NO.	DATE	REVISED	BY
J	03/06/2019	GENERAL REVISED	
I	07/04/2019	GENERAL REVISED	
H	28/01/2019	GENERAL REVISED	
G	19/01/2019	GENERAL REVISED	
F	13/01/2019	GENERAL REVISED	
E	22/12/2018	GENERAL REVISED	
D	01/12/2018	GENERAL REVISED	
C	08/11/2018	GENERAL REVISED	
B	13/10/2018	GENERAL REVISED	
A	14/9/2018	GENERAL REVISED	

JOB NO. : J-837

PROJECT : URA KWUN TONG TOWN CENTRE REDEVELOPMENT (AREA 2 & 3) AT NKIL 6514, KWUN TONG, KWLOON

TITLE : 50TH FLOOR EMBED LAYOUT PLAN OF CURTAIN WALL AT TOWER 1

DATE : 10-SEP-18 | SCALE : 1:100 (A1)

DRAWN BY : ASING | CHECKED BY : -

美特鋁質有限公司 MIDI ALUMINIUM FABRICATOR LTD.
Units 6-8, Sunray Industrial Centre, 1/F
610 Cha Kwo Ling Road, Kowloon
Tel:23489211-4 Fax:(852)27727666

DWG NO. : J837-CW-1105 | REV. : J

LEGEND :

- E01 = HILIT , HAC-70 CAST IN CHANNEL
- E02 = HILIT , HAC-50 CAST IN CHANNEL
- E04 = CAST-IN HOLDING DOWN BOLT
- E05 = CAST-IN HOLDING DOWN BOLT
- E06 = CAST-IN HOLDING DOWN BOLT
- E07 = CAST-IN HOLDING DOWN BOLT

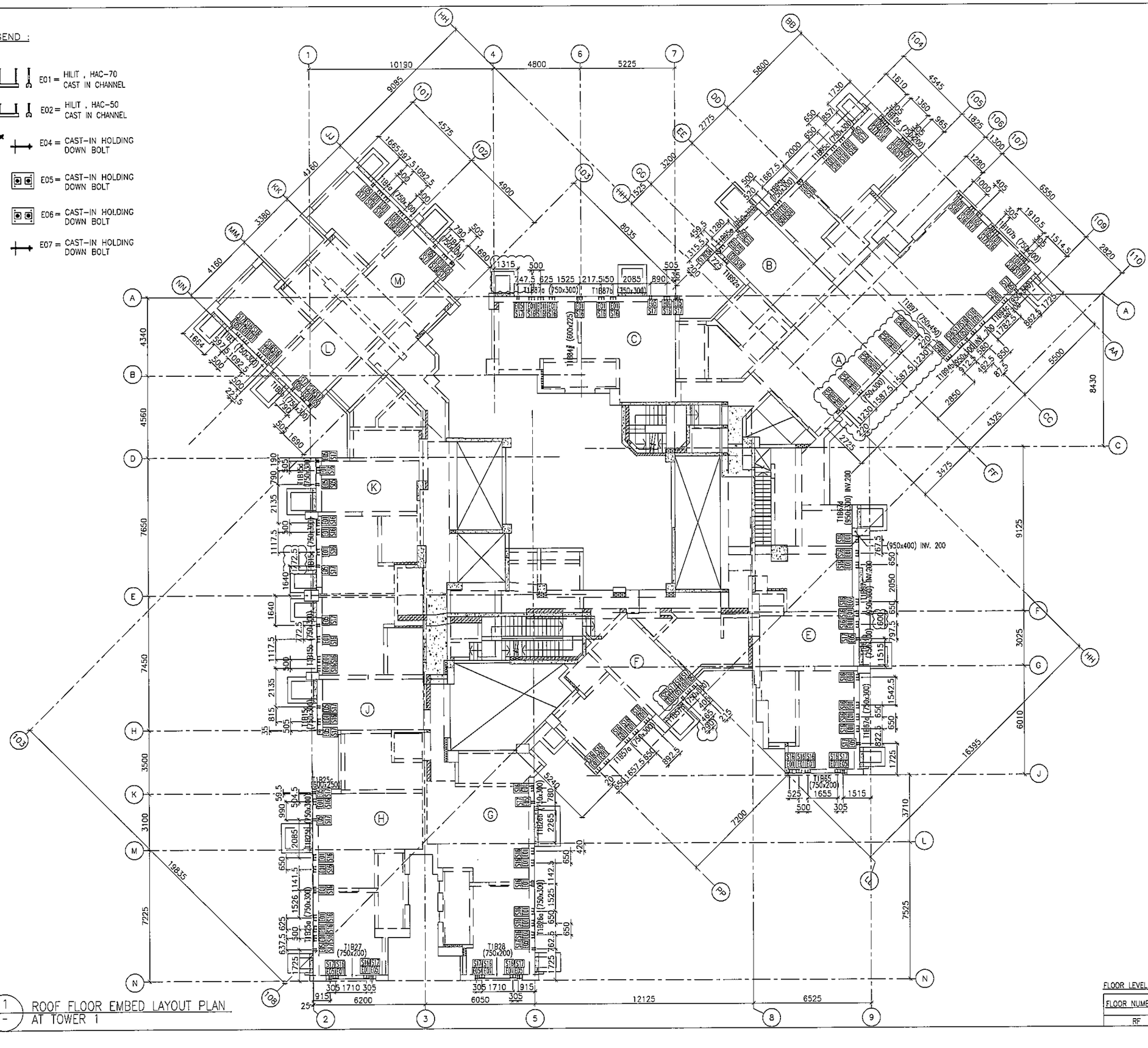

1 / - ROOF FLOOR EMBED LAYOUT PLAN AT TOWER 1

FLOOR LEVEL (S.F.L.)(T1)

FLOOR NUMBERING	LEVEL (mPD)
RF	+165.400

B.D. REF :

CLIENT : 信和置業有限公司 Sino Land Company Limited

ARCHITECT : WONG TUNG & PARTNERS LIMITED ARCHITECTS & PLANNERS

MAIN CONTRACTOR : CR Construction Company Limited

STRUCTURAL ENGINEER : AECOM

FACADE CONSULTANT: AECOM

NOTE :
1. ALL DIMENSIONS ARE IN mm.
2. ALL ELEVATIONS ARE VIEWED FROM OUTSIDE.
3. ALL DIMENSIONS TO BE VERIFIED ON SITE BEFORE FABRICATION.

LEGEND :
- X1 / X001 — DETAIL MARK NO. / REFER SHEET NO.
1. F.F.L. --- FINISHED FLOOR LEVEL
2. S.F.L. --- STRUCTURAL FLOOR LEVEL
3. (R) --- REVERSED DETAIL

NO.	DATE	REVISED	BY
J	20/05/2019	GENERAL REVISED	
I	03/05/2019	GENERAL REVISED	
H	07/04/2019	GENERAL REVISED	
G	21/02/2019	GENERAL REVISED	
F	28/01/2019	GENERAL REVISED	
E	19/01/2019	GENERAL REVISED	
D	22/12/2018	GENERAL REVISED	
C	01/12/2018	GENERAL REVISED	
B	08/11/2018	GENERAL REVISED	
A	13/10/2018	GENERAL REVISED	

JOB NO. : J-837

PROJECT : URA KWUN TONG TOWN CENTRE REDEVELOPMENT (AREA 2 & 3) AT NKIL 6514, KWUN TONG, KWLOON

TITLE : ROOF FLOOR EMBED LAYOUT PLAN OF CURTAIN WALL AT TOWER 1

DATE : 10-SEP-18 | SCALE : 1:100 (A1)

DRAWN BY : ASING | CHECKED BY : -

美特鋁質有限公司 MIDI ALUMINIUM FABRICATOR LTD.
Units 6-8, Sunray Industrial Centre, 1/F
610 Cha Kwo Ling Road, Kowloon
Tel:23489211-4 Fax:(852)27727666

DWG NO. : J837--CW-1106 | REV. : J

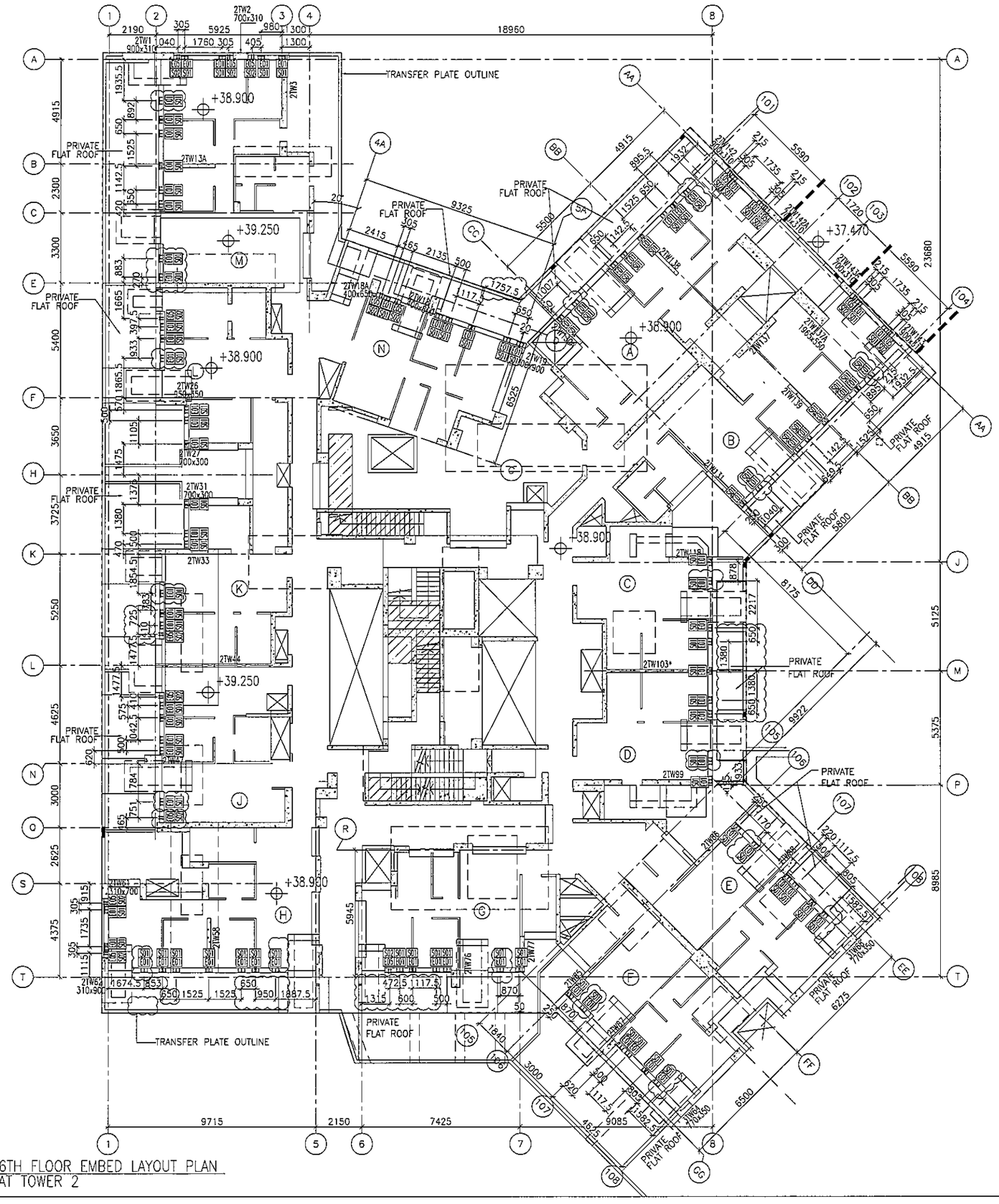
TRANSFER PLATE OUTLINE
PRIVATE FLAT ROOF
+38.900
+39.250
+37.470
+38.900
+38.900
+39.250
+38.900
+38.900
TRANSFER PLATE OUTLINE
PRIVATE FLAT ROOF
2TW1
2TW2 700x310
2TW3
2TW3A
2TW4
2TW5
2TW6
2TW7
2TW8A 400x650
2TW8B 700x650
2TW9 700x900
2TW10
2TW11
2TW12
2TW13A
2TW13B
2TW14
2TW15
2TW16
2TW17A 1965x550
2TW17B 1965x550
2TW18
2TW19
2TW20
2TW21
2TW22
2TW23
2TW24
2TW25
2TW26 550x550
2TW27 700x300
2TW28
2TW29
2TW30
2TW31 700x300
2TW32
2TW33
2TW34
2TW35
2TW36
2TW37
2TW38
2TW39
2TW40
2TW41
2TW42
2TW43
2TW44
2TW45
2TW46
2TW47
2TW48
2TW49
2TW50
2TW51
2TW52
2TW53
2TW54
2TW55
2TW56
2TW57
2TW58
2TW59
2TW60
2TW61 310x90
2TW62
2TW63
2TW64 770x350
2TW65
2TW66
2TW67
2TW68
2TW69
2TW70
2TW71
2TW72
2TW73
2TW74
2TW75
2TW76
2TW77
2TW78
2TW79
2TW80
2TW81
2TW82
2TW83
2TW84
2TW85
2TW86
2TW87
2TW88
2TW89
2TW90
2TW91
2TW92
2TW93
2TW94
2TW95
2TW96
2TW97
2TW98
2TW99
2TW100
2TW101
2TW102
2TW103*
2TW104
2TW105
2TW106
2TW107
2TW108
2TW109
2TW110
2TW111
2TW112
2TW113
2TW114
2TW115
2TW116
2TW117
2TW118
2TW119
2TW120
2TW121
2TW122
2TW123
2TW124
2TW125
2TW126
2TW127
2TW128
2TW129
2TW130
2TW131
2TW132
2TW133
2TW134
2TW135
2TW136
2TW137
2TW138
2TW139
2TW140
2TW141
2TW142
2TW143

LEGEND :

- E01 = HILIT , HAC-70 CAST IN CHANNEL
- E02 = HILIT , HAC-50 CAST IN CHANNEL
- E04 = CAST-IN HOLDING DOWN BOLT
- E05 = CAST-IN HOLDING DOWN BOLT

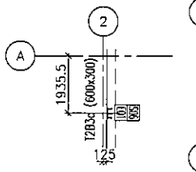

USED ONLY ON THE 7TH BOTTOM

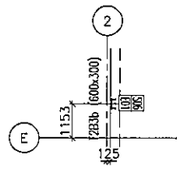

USED ONLY ON THE 7TH BOTTOM

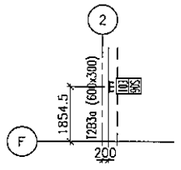

USED ONLY ON THE 7TH BOTTOM

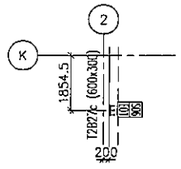

USED ONLY ON THE 7TH BOTTOM

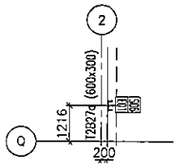

USED ONLY ON THE 7TH BOTTOM

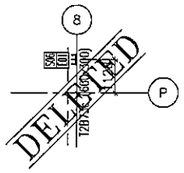

USED ONLY ON THE 7TH BOTTOM

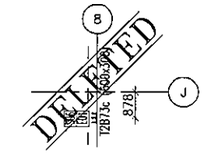

USED ONLY ON THE 7TH BOTTOM

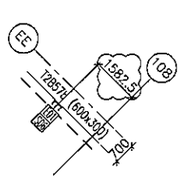

USED ONLY ON THE 7TH BOTTOM

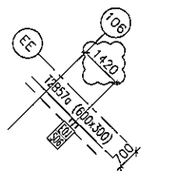

USED ONLY ON THE 7TH BOTTOM

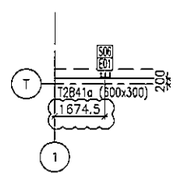

USED ONLY ON THE 7TH BOTTOM

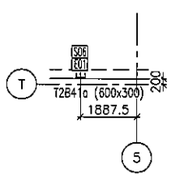

USED ONLY ON THE 7TH BOTTOM

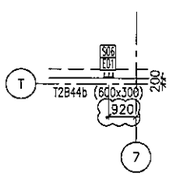

USED ONLY ON THE 7TH BOTTOM

1 / - TYPICAL FLOOR EMBED LAYOUT PLAN AT TOWER 2

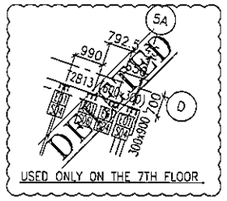

USED ONLY ON THE 7TH FLOOR

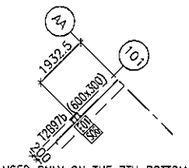

USED ONLY ON THE 7TH BOTTOM

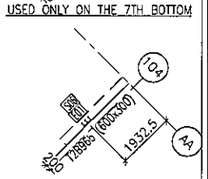

USED ONLY ON THE 7TH BOTTOM

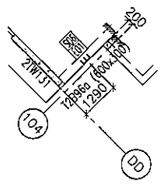

USED ONLY ON THE 7TH BOTTOM

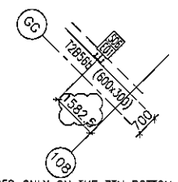

USED ONLY ON THE 7TH BOTTOM

FLOOR LEVEL (S.F.L.)(T2)

FLOOR NUMBERING	LEVEL (mPD)
7F	42.400
8F	45.550
9F	48.700
10F	51.850
11F	55.000
12F	58.150
15F	61.300
16F	64.450
17F	67.600
18F	70.750
19F	73.900
20F	77.050
21F	80.200
22F	83.350
23F	86.500
25F	89.650
26F	92.800
29F	102.250
30F	105.400
31F	108.550
32F	111.700
33F	114.850
35F	118.000
36F	121.150
37F	124.300
38F	127.450
39F	130.600
40F	133.750
41F	136.900
42F	140.050
43F	143.100
45F	146.350
46F	149.500
47F	152.650
48F	155.800
49F	158.950
50F	162.100
51F	165.250
52F	168.400
53F	171.550

B.D. REF :

CLIENT : 信和置業有限公司 Sino Land Company Limited

ARCHITECT : WONG TUNG & PARTNERS LIMITED ARCHITECTS & PLANNERS

MAIN CONTRACTOR : CR Construction Company Limited

STRUCTURAL ENGINEER : AECOM

FACADE CONSULTANT: AECOM

NOTE :
1. ALL DIMENSIONS ARE IN mm.
2. ALL ELEVATIONS ARE VIEWED FROM OUTSIDE.
3. ALL DIMENSIONS TO BE VERIFIED ON SITE BEFORE FABRICATION.

LEGEND :
- X1 / X001 — DETAIL MARK NO. / REFER SHEET NO.
1. F.F.L. --- FINISHED FLOOR LEVEL
2. S.F.L. --- STRUCTURAL FLOOR LEVEL
3. /R --- REVERSED DETAIL

NO.	DATE	REVISED	BY
K	18/08/2019	GENERAL REVISED	
J	16/07/2019	GENERAL REVISED	
I	28/01/2019	GENERAL REVISED	
H	19/01/2019	GENERAL REVISED	
G	08/11/2018	GENERAL REVISED	
F	8/10/2018	GENERAL REVISED	
E	28/9/2018	GENERAL REVISED	
D	04/9/2018	GENERAL REVISED	
C	23/8/2018	GENERAL REVISED	
B	11/8/2018	GENERAL REVISED	
A	4/8/2018	GENERAL REVISED	

JOB NO. : J-837

PROJECT : URA KWUN TONG TOWN CENTRE REDEVELOPMENT (AREA 2 & 3) AT NKIL 6514, KWUN TONG, KWLOON

TITLE : TYPICAL FLOOR EMBED LAYOUT PLAN OF CURTAIN WALL AT TOWER 2

DATE : 04-JUL-18 | SCALE : 1:100 (A1)

DRAWN BY : ASING | CHECKED BY : -

美特鋁質有限公司 MIDI ALUMINIUM FABRICATOR LTD.
Units 6-8, Sunray Industrial Centre, 1/F
610 Cho Kwo Ling Road, Kowloon
Tel:23489211-4 Fax:(852)27727666

DWG NO. : J837-CW-1202 | REV. : K

LEGEND :

- E01 = HILIT , HAC-70 CAST IN CHANNEL
- E02 = HILIT , HAC-50 CAST IN CHANNEL
- E04 = CAST-IN HOLDING DOWN BOLT
- E05 = CAST-IN HOLDING DOWN BOLT
- E06 = CAST-IN HOLDING DOWN BOLT
- E07 = CAST-IN HOLDING DOWN BOLT

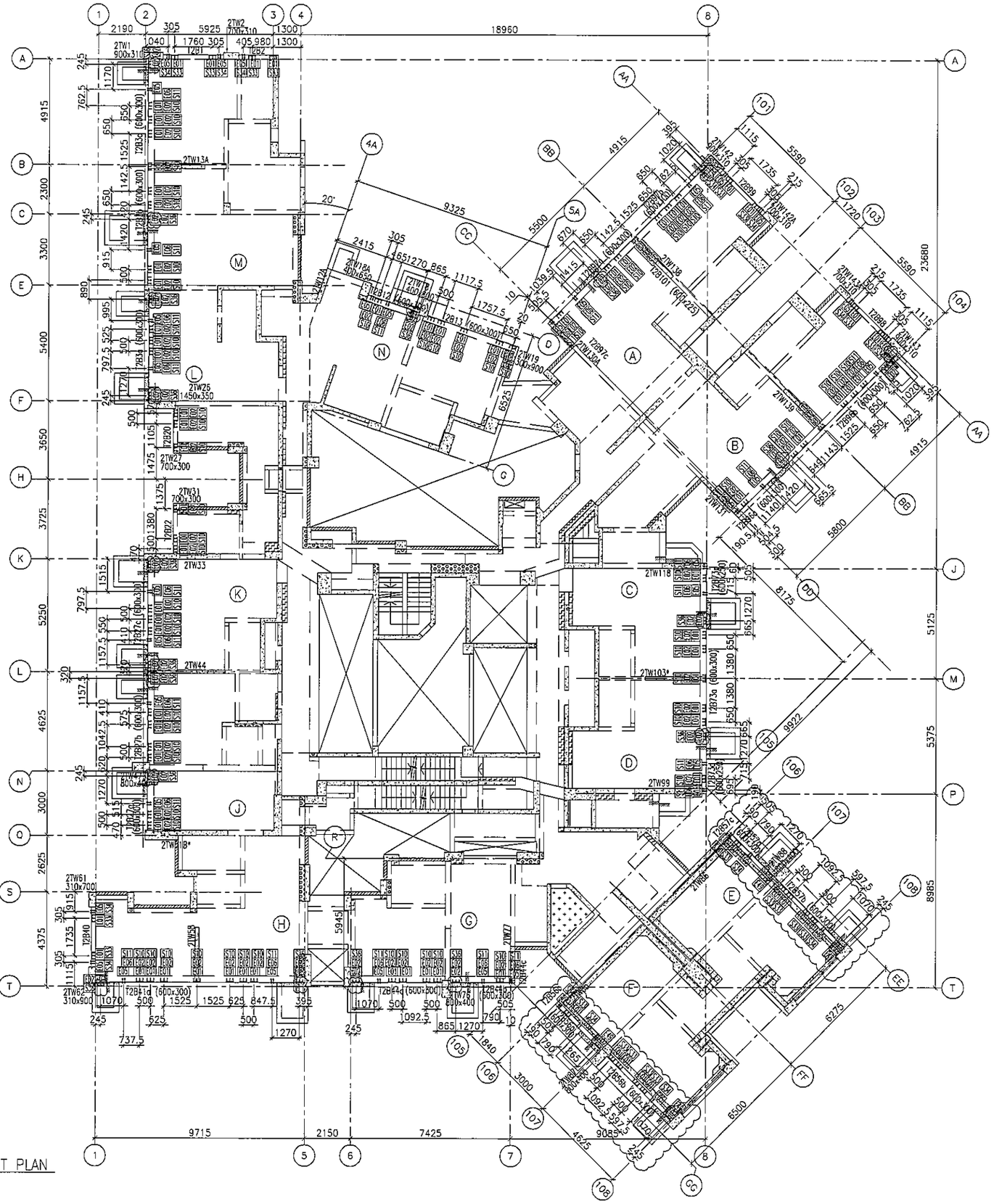

1 / - 27TH FLOOR EMBED LAYOUT PLAN AT TOWER 2

FLOOR LEVEL (S.F.L.)(T2)

FLOOR NUMBERING	LEVEL (mPD)
27F	+95.95

B.D. REF :

CLIENT : 信和置業有限公司 Sino Land Company Limited

ARCHITECT : WONG TUNG & PARTNERS LIMITED ARCHITECTS & PLANNERS

MAIN CONTRACTOR : CR Construction Company Limited

STRUCTURAL ENGINEER : AECOM

FACADE CONSULTANT: AECOM

NOTE :
1. ALL DIMENSIONS ARE IN mm.
2. ALL ELEVATIONS ARE VIEWED FROM OUTSIDE.
3. ALL DIMENSIONS TO BE VERIFIED ON SITE BEFORE FABRICATION.

LEGEND :
- X1 / X001 — DETAIL MARK NO. / REFER SHEET NO.
1. F.F.L. --FINISHED FLOOR LEVEL
2. S.F.L. --STRUCTURAL FLOOR LEVEL
3. /R --REVERSED DETAIL

NO.	DATE	REVISED	BY
G	18/08/2019	GENERAL REVISED	
F	21/02/2019	GENERAL REVISED	
E	19/01/2019	GENERAL REVISED	
D	08/11/2018	GENERAL REVISED	
C	8/10/2018	GENERAL REVISED	
B	28/9/2018	GENERAL REVISED	
A	07/9/2018	GENERAL REVISED	

JOB NO. : J-837

PROJECT : URA KWUN TONG TOWN CENTRE REDEVELOPMENT (AREA 2 & 3) AT NKIL 6514, KWUN TONG, KWLOON

TITLE : 27TH FLOOR EMBED LAYOUT PLAN OF CURTAIN WALL AT TOWER 2

DATE : 10-SEP-18 | SCALE : 1:100 (A1)

DRAWN BY : ASING | CHECKED BY : -

美特鋁質有限公司 MIDI ALUMINIUM FABRICATOR LTD.
Units 6-8, Sunray Industrial Centre, 1/F
610 Cha Kwo Ling Road, Kowloon
Tel:23489211-4 Fax:(852)27727666

DWG NO. : J837-CW-1203 | REV. : G

LEGEND :

- E01 = HILIT , HAC-70 CAST IN CHANNEL
- E02 = HILIT , HAC-50 CAST IN CHANNEL
- E04 = CAST-IN HOLDING DOWN BOLT
- E05 = CAST-IN HOLDING DOWN BOLT

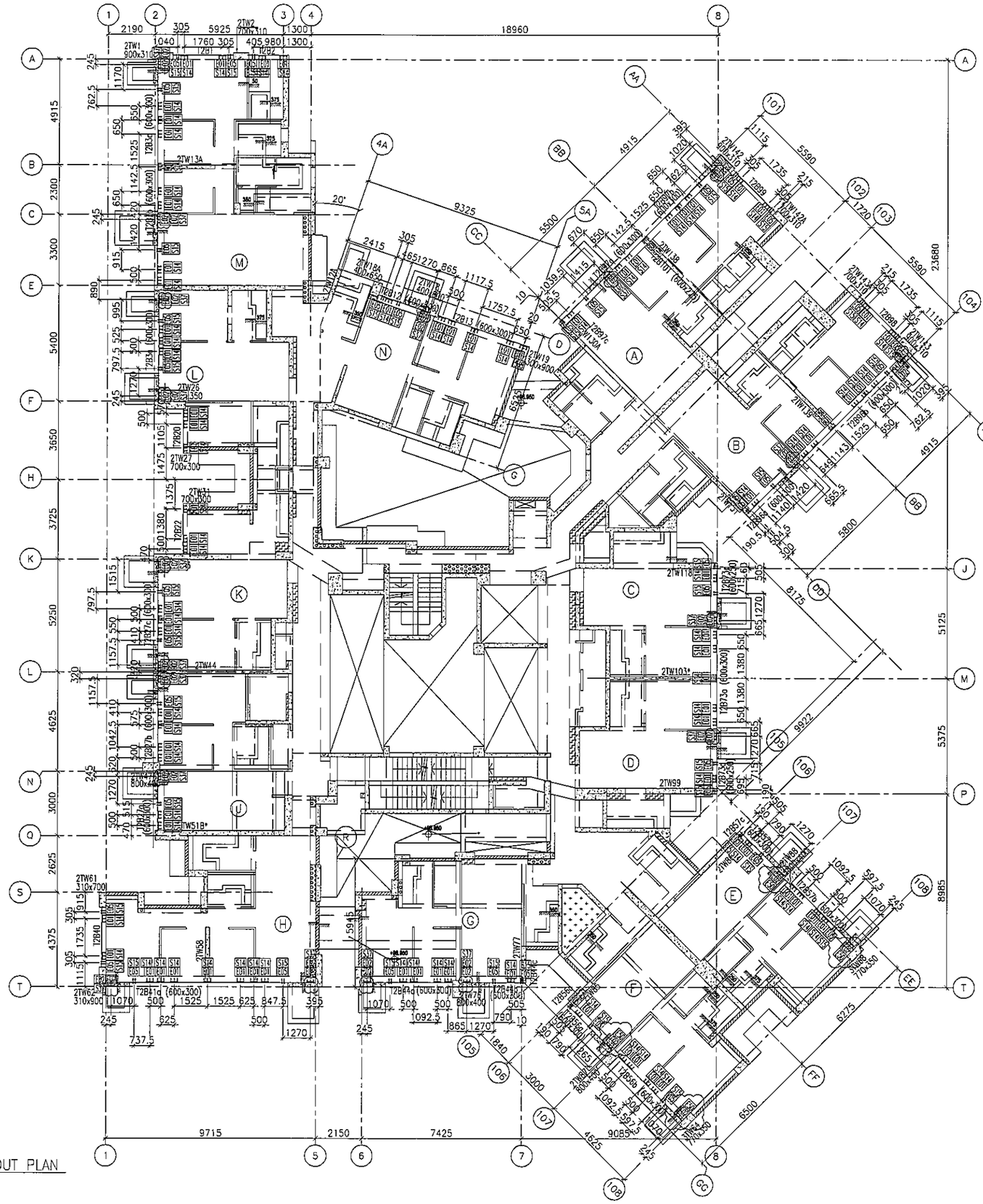

1 / - 28TH FLOOR EMBED LAYOUT PLAN AT TOWER 2

FLOOR LEVEL (S.F.L.)(T2)

FLOOR NUMBERING	LEVEL (mPD)
28F	+99.100

B.D. REF :

CLIENT : 信和置業有限公司 Sino Land Company Limited

ARCHITECT : WONG TUNG & PARTNERS LIMITED ARCHITECTS & PLANNERS

MAIN CONTRACTOR : CR Construction Company Limited

STRUCTURAL ENGINEER : AECOM

FACADE CONSULTANT: AECOM

NOTE :
1. ALL DIMENSIONS ARE IN mm.
2. ALL ELEVATIONS ARE VIEWED FROM OUTSIDE.
3. ALL DIMENSIONS TO BE VERIFIED ON SITE BEFORE FABRICATION.

LEGEND :
- X1 / X001 — DETAIL MARK NO. / REFER SHEET NO.
1. F.F.L. --FINISHED FLOOR LEVEL
2. S.F.L. --STRUCTURAL FLOOR LEVEL
3. /R --REVERSED DETAIL

NO.	DATE	REMARK	BY
F	18/08/2019	GENERAL REVISED	
E	21/02/2019	GENERAL REVISED	
D	19/01/2019	GENERAL REVISED	
C	08/11/2018	GENERAL REVISED	
B	8/10/2018	GENERAL REVISED	
A	28/9/2018	GENERAL REVISED	

JOB NO. : J-837

PROJECT : URA KWUN TONG TOWN CENTRE REDEVELOPMENT (AREA 2 & 3) AT NKIL 6514, KWUN TONG, KWLOON

TITLE : 28TH FLOOR EMBED LAYOUT PLAN OF CURTAIN WALL AT TOWER 2

DATE : 10-SEP-18 | SCALE : 1:100 (A1)

DRAWN BY : ASING | CHECKED BY : -

美特鋁質有限公司 MIDI ALUMINIUM FABRICATOR LTD.
Units 6-8, Sunray Industrial Centre, 1/F
610 Cha Kwo Ling Road, Kowloon
Tel:23489211-4 Fax:(852)27727666

DWG NO. : J837-CW-1204 | REV. : F

LEGEND :

- E01 = HILIT , HAC-70 CAST IN CHANNEL
- E02 = HILIT , HAC-50 CAST IN CHANNEL
- E03 = GAL. MILD STEEL CAST IN EMBED
- E04 = CAST-IN HOLDING DOWN BOLT
- E05 = CAST-IN HOLDING DOWN BOLT

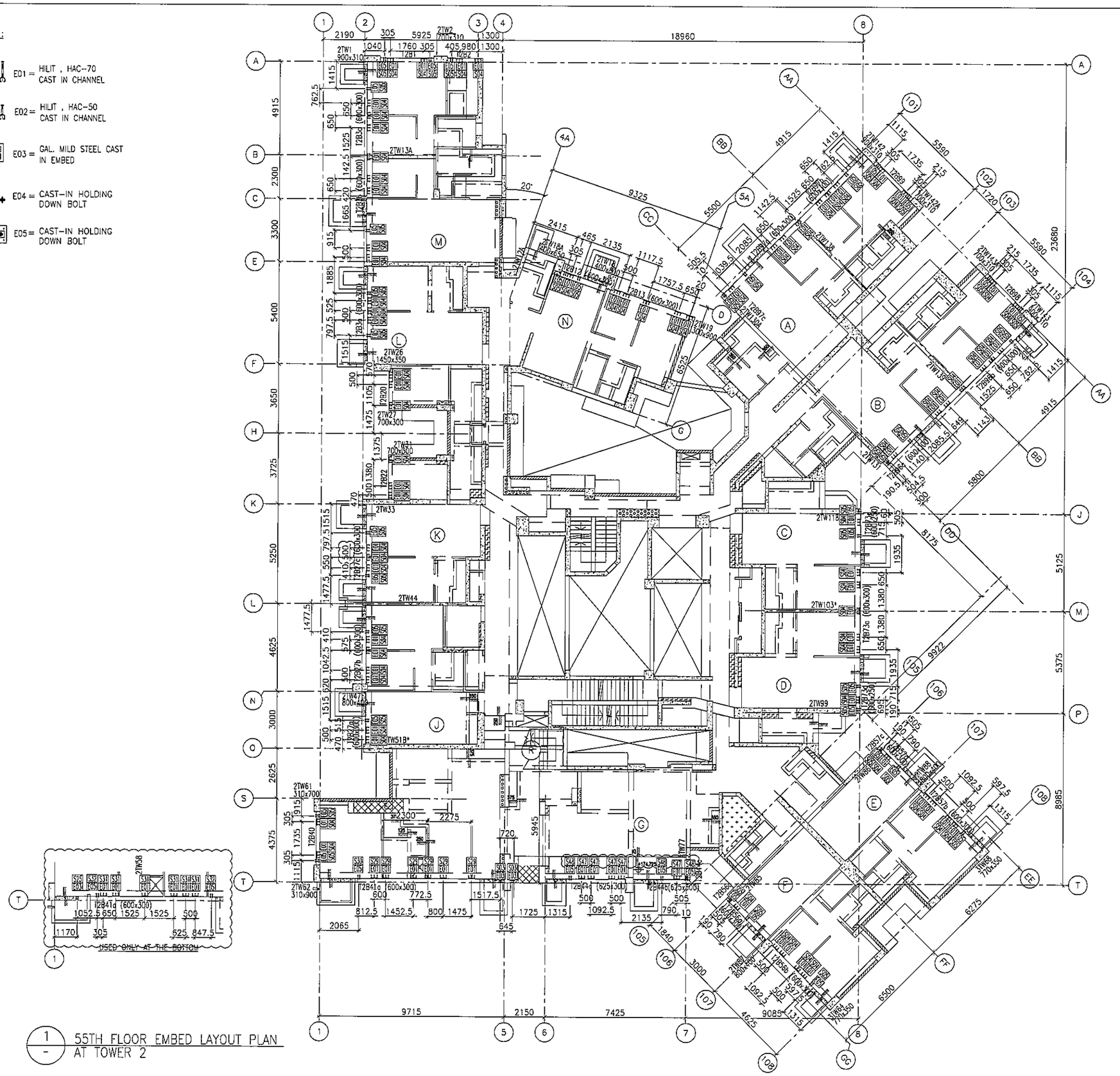
2190
305
5925
1300
18960
1040
1760
980
2TW1 900x310
2TW2 700x310
2TW13A
2TW26 1450x350
2TW27 700x300
2TW33
2TW44
2TW61 310x700
2TW62 310x900
2TW58
2TW99
2TW103*
2TW118
2TW51B*
2TW77
2TW19 300x300
2TW13B 600x300
2TW18A 600x300
2TW18B 600x300
2TW13C 600x300
2TW13D 600x300
2TW13E 600x300
2TW13F 600x300
2TW13G 600x300
2TW13H 600x300
2TW13J 600x300
2TW13K 600x300
2TW13L 600x300
2TW13M 600x300
2TW13N 600x300
2TW13P 600x300
2TW13Q 600x300
2TW13R 600x300
2TW13S 600x300
2TW13T 600x300
2TW13U 600x300
2TW13V 600x300
2TW13W 600x300
2TW13X 600x300
2TW13Y 600x300
2TW13Z 600x300
2TW13AA 600x300
2TW13AB 600x300
2TW13AC 600x300
2TW13AD 600x300
2TW13AE 600x300
2TW13AF 600x300
2TW13AG 600x300
2TW13AH 600x300
2TW13AJ 600x300
2TW13AK 600x300
2TW13AL 600x300
2TW13AM 600x300
2TW13AN 600x300
2TW13AP 600x300
2TW13AQ 600x300
2TW13AR 600x300
2TW13AS 600x300
2TW13AT 600x300
2TW13AU 600x300
2TW13AV 600x300
2TW13AW 600x300
2TW13AX 600x300
2TW13AY 600x300
2TW13AZ 600x300
2TW13BA 600x300
2TW13BB 600x300
2TW13BC 600x300
2TW13BD 600x300
2TW13BE 600x300
2TW13BF 600x300
2TW13BG 600x300
2TW13BH 600x300
2TW13BJ 600x300
2TW13BK 600x300
2TW13BL 600x300
2TW13BM 600x300
2TW13BN 600x300
2TW13BP 600x300
2TW13BQ 600x300
2TW13BR 600x300
2TW13BS 600x300
2TW13BT 600x300
2TW13BU 600x300
2TW13BV 600x300
2TW13BW 600x300
2TW13BX 600x300
2TW13BY 600x300
2TW13BZ 600x300
2TW13CA 600x300
2TW13CB 600x300
2TW13CC 600x300
2TW13CD 600x300
2TW13CE 600x300
2TW13CF 600x300
2TW13CG 600x300
2TW13CH 600x300
2TW13CJ 600x300
2TW13CK 600x300
2TW13CL 600x300
2TW13CM 600x300
2TW13CN 600x300
2TW13CP 600x300
2TW13CQ 600x300
2TW13CR 600x300
2TW13CS 600x300
2TW13CT 600x300
2TW13CU 600x300
2TW13CV 600x300
2TW13CW 600x300
2TW13CX 600x300
2TW13CY 600x300
2TW13CZ 600x300
2TW13DA 600x300
2TW13DB 600x300
2TW13DC 600x300
2TW13DD 600x300
2TW13DE 600x300
2TW13DF 600x300
2TW13DG 600x300
2TW13DH 600x300
2TW13DJ 600x300
2TW13DK 600x300
2TW13DL 600x300
2TW13DM 600x300
2TW13DN 600x300
2TW13DP 600x300
2TW13DQ 600x300
2TW13DR 600x300
2TW13DS 600x300
2TW13DT 600x300
2TW13DU 600x300
2TW13DV 600x300
2TW13DW 600x300
2TW13DX 600x300
2TW13DY 600x300
2TW13DZ 600x300
2TW13EA 600x300
2TW13EB 600x300
2TW13EC 600x300
2TW13ED 600x300
2TW13EE 600x300
2TW13EF 600x300
2TW13EG 600x300
2TW13EH 600x300
2TW13EJ 600x300
2TW13EK 600x300
2TW13EL 600x300
2TW13EM 600x300
2TW13EN 600x300
2TW13EP 600x300
2TW13EQ 600x300
2TW13ER 600x300
2TW13ES 600x300
2TW13ET 600x300
2TW13EU 600x300
2TW13EV 600x300
2TW13EW 600x300
2TW13EX 600x300
2TW13EY 600x300
2TW13EZ 600x300
2TW13FA 600x300
2TW13FB 600x300
2TW13FC 600x300
2TW13FD 600x300
2TW13FE 600x300
2TW13FF 600x300
2TW13FG 600x300
2TW13FH 600x300
2TW13FJ 600x300
2TW13FK 600x300
2TW13FL 600x300
2TW13FM 600x300
2TW13FN 600x300
2TW13FP 600x300
2TW13FQ 600x300
2TW13FR 600x300
2TW13FS 600x300
2TW13FT 600x300
2TW13FU 600x300
2TW13FV 600x300
2TW13FW 600x300
2TW13FX 600x300
2TW13FY 600x300
2TW13FZ 600x300
2TW13GA 600x300
2TW13GB 600x300
2TW13GC 600x300
2TW13GD 600x300
2TW13GE 600x300
2TW13GF 600x300
2TW13GG 600x300
2TW13GH 600x300
2TW13GJ 600x300
2TW13GK 600x300
2TW13GL 600x300
2TW13GM 600x300
2TW13GN 600x300
2TW13GP 600x300
2TW13GQ 600x300
2TW13GR 600x300
2TW13GS 600x300
2TW13GT 600x300
2TW13GU 600x300
2TW13GV 600x300
2TW13GW 600x300
2TW13GX 600x300
2TW13GY 600x300
2TW13GZ 600x300
2TW13HA 600x300
2TW13HB 600x300
2TW13HC 600x300
2TW13HD 600x300
2TW13HE 600x300
2TW13HF 600x300
2TW13HG 600x300
2TW13HH 600x300
2TW13HJ 600x300
2TW13HK 600x300
2TW13HL 600x300
2TW13HM 600x300
2TW13HN 600x300
2TW13HP 600x300
2TW13HQ 600x300
2TW13HR 600x300
2TW13HS 600x300
2TW13HT 600x300
2TW13HU 600x300
2TW13HV 600x300
2TW13HW 600x300
2TW13HX 600x300
2TW13HY 600x300
2TW13HZ 600x300
2TW13JA 600x300
2TW13JB 600x300
2TW13JC 600x300
2TW13JD 600x300
2TW13JE 600x300
2TW13JF 600x300
2TW13JG 600x300
2TW13JH 600x300
2TW13JJ 600x300
2TW13JK 600x300
2TW13JL 600x300
2TW13JM 600x300
2TW13JN 600x300
2TW13JP 600x300
2TW13JQ 600x300
2TW13JR 600x300
2TW13JS 600x300
2TW13JT 600x300
2TW13JU 600x300
2TW13JV 600x300
2TW13JW 600x300
2TW13JX 600x300
2TW13JY 600x300
2TW13JZ 600x300
2TW13KA 600x300
2TW13KB 600x300
2TW13KC 600x300
2TW13KD 600x300
2TW13KE 600x300
2TW13KF 600x300
2TW13KG 600x300
2TW13KH 600x300
2TW13KJ 600x300
2TW13KK 600x300
2TW13KL 600x300
2TW13KM 600x300
2TW13KN 600x300
2TW13KP 600x300
2TW13KQ 600x300
2TW13KR 600x300
2TW13KS 600x300
2TW13KT 600x300
2TW13KU 600x300
2TW13KV 600x300
2TW13KW 600x300
2TW13KX 600x300
2TW13KY 600x300
2TW13KZ 600x300
2TW13LA 600x300
2TW13LB 600x300
2TW13LC 600x300
2TW13LD 600x300
2TW13LE 600x300
2TW13LF 600x300
2TW13LG 600x300
2TW13LH 600x300
2TW13LJ 600x300
2TW13LK 600x300
2TW13LL 600x300
2TW13LM 600x300
2TW13LN 600x300
2TW13LP 600x300
2TW13LQ 600x300
2TW13LR 600x300
2TW13LS 600x300
2TW13LT 600x300
2TW13LU 600x300
2TW13LV 600x300
2TW13LW 600x300
2TW13LX 600x300
2TW13LY 600x300
2TW13LZ 600x300
2TW13MA 600x300
2TW13MB 600x300
2TW13MC 600x300
2TW13MD 600x300
2TW13ME 600x300
2TW13MF 600x300
2TW13MG 600x300
2TW13MH 600x300
2TW13MJ 600x300
2TW13MK 600x300
2TW13ML 600x300
2TW13MM 600x300
2TW13MN 600x300
2TW13MP 600x300
2TW13MQ 600x300
2TW13MR 600x300
2TW13MS 600x300
2TW13MT 600x300
2TW13MU 600x300
2TW13MV 600x300
2TW13MW 600x300
2TW13MX 600x300
2TW13MY 600x300
2TW13MZ 600x300
2TW13NA 600x300
2TW13NB 600x300
2TW13NC 600x300
2TW13ND 600x300
2TW13NE 600x300
2TW13NF 600x300
2TW13NG 600x300
2TW13NH 600x300
2TW13NJ 600x300
2TW13NK 600x300
2TW13NL 600x300
2TW13NM 600x300
2TW13NN 600x300
2TW13NP 600x300
2TW13NQ 600x300
2TW13NR 600x300
2TW13NS 600x300
2TW13NT 600x300
2TW13NU 600x300
2TW13NV 600x300
2TW13NW 600x300
2TW13NX 600x300
2TW13NY 600x300
2TW13NZ 600x300
2TW13PA 600x300
2TW13PB 600x300
2TW13PC 600x300
2TW13PD 600x300
2TW13PE 600x300
2TW13PF 600x300
2TW13PG 600x300
2TW13PH 600x300
2TW13PJ 600x300
2TW13PK 600x300
2TW13PL 600x300
2TW13PM 600x300
2TW13PN 600x300
2TW13PP 600x300
2TW13PQ 600x300
2TW13PR 600x300
2TW13PS 600x300
2TW13PT 600x300
2TW13PU 600x300
2TW13PV 600x300
2TW13PW 600x300
2TW13PX 600x300
2TW13PY 600x300
2TW13PZ 600x300
2TW13QA 600x300
2TW13QB 600x300
2TW13QC 600x300
2TW13QD 600x300
2TW13QE 600x300
2TW13QF 600x300
2TW13QG 600x300
2TW13QH 600x300
2TW13QJ 600x300
2TW13QK 600x300
2TW13QL 600x300
2TW13QM 600x300
2TW13QN 600x300
2TW13QP 600x300
2TW13QQ 600x300
2TW13QR 600x300
2TW13QS 600x300
2TW13QT 600x300
2TW13QU 600x300
2TW13QV 600x300
2TW13QW 600x300
2TW13QX 600x300
2TW13QY 600x300
2TW13QZ 600x300
2TW13RA 600x300
2TW13RB 600x300
2TW13RC 600x300
2TW13RD 600x300
2TW13RE 600x300
2TW13RF 600x300
2TW13RG 600x300
2TW13RH 600x300
2TW13RJ 600x300
2TW13RK 600x300
2TW13RL 600x300
2TW13RM 600x300
2TW13RN 600x300
2TW13RP 600x300
2TW13RQ 600x300
2TW13RR 600x300
2TW13RS 600x300
2TW13RT 600x300
2TW13RU 600x300
2TW13RV 600x300
2TW13RW 600x300
2TW13RX 600x300
2TW13RY 600x300
2TW13RZ 600x300
2TW13SA 600x300
2TW13SB 600x300
2TW13SC 600x300
2TW13SD 600x300
2TW13SE 600x300
2TW13SF 600x300
2TW13SG 600x300
2TW13SH 600x300
2TW13SJ 600x300
2TW13SK 600x300
2TW13SL 600x300
2TW13SM 600x300
2TW13SN 600x300
2TW13SP 600x300
2TW13SQ 600x300
2TW13SR 600x300
2TW13SS 600x300
2TW13ST 600x300
2TW13SU 600x300
2TW13SV 600x300
2TW13SW 600x300
2TW13SX 600x300
2TW13SY 600x300
2TW13SZ 600x300
2TW13TA 600x300
2TW13TB 600x300
2TW13TC 600x300
2TW13TD 600x300
2TW13TE 600x300
2TW13TF 600x300
2TW13TG 600x300
2TW13TH 600x300
2TW13TJ 600x300
2TW13TK 600x300
2TW13TL 600x300
2TW13TM 600x300
2TW13TN 600x300
2TW13TP 600x300
2TW13TQ 600x300
2TW13TR 600x300
2TW13TS 600x300
2TW13TT 600x300
2TW13TU 600x300
2TW13TV 600x300
2TW13TW 600x300
2TW13TX 600x300
2TW13TY 600x300
2TW13TZ 600x300
2TW13UA 600x300
2TW13UB 600x300
2TW13UC 600x300
2TW13UD 600x300
2TW13UE 600x300
2TW13UF 600x300
2TW13UG 600x300
2TW13UH 600x300
2TW13UJ 600x300
2TW13UK 600x300
2TW13UL 600x300
2TW13UM 600x300
2TW13UN 600x300
2TW13UP 600x300
2TW13UQ 600x300
2TW13UR 600x300
2TW13US 600x300
2TW13UT 600x300
2TW13UU 600x300
2TW13UV 600x300
2TW13UW 600x300
2TW13UX 600x300
2TW13UY 600x300
2TW13UZ 600x300
2TW13VA 600x300
2TW13VB 600x300
2TW13VC 600x300
2TW13VD 600x300
2TW13VE 600x300
2TW13VF 600x300
2TW13VG 600x300
2TW13VH 600x300
2TW13VJ 600x300
2TW13VK 600x300
2TW13VL 600x300
2TW13VM 600x300
2TW13VN 600x300
2TW13VP 600x300
2TW13VQ 600x300
2TW13VR 600x300
2TW13VS 600x300
2TW13VT 600x300
2TW13VU 600x300
2TW13VV 600x300
2TW13VW 600x300
2TW13VX 600x300
2TW13VY 600x300
2TW13VZ 600x300
2TW13WA 600x300
2TW13WB 600x300
2TW13WC 600x300
2TW13WD 600x300
2TW13WE 600x300
2TW13WF 600x300
2TW13WG 600x300
2TW13WH 600x300
2TW13WJ 600x300
2TW13WK 600x300
2TW13WL 600x300
2TW13WM 600x300
2TW13WN 600x300
2TW13WP 600x300
2TW13WQ 600x300
2TW13WR 600x300
2TW13WS 600x300
2TW13WT 600x300
2TW13WU 600x300
2TW13WV 600x300
2TW13WW 600x300
2TW13WX 600x300
2TW13WY 600x300
2TW13WZ 600x300
2TW13XA 600x300
2TW13XB 600x300
2TW13XC 600x300
2TW13XD 600x300
2TW13XE 600x300
2TW13XF 600x300
2TW13XG 600x300
2TW13XH 600x300
2TW13XJ 600x300
2TW13XK 600x300
2TW13XL 600x300
2TW13XM 600x300
2TW13XN 600x300
2TW13XP 600x300
2TW13XQ 600x300
2TW13XR 600x300
2TW13XS 600x300
2TW13XT 600x300
2TW13XU 600x300
2TW13XV 600x300
2TW13XW 600x300
2TW13XX 600x300
2TW13XY 600x300
2TW13XZ 600x300
2TW13YA 600x300
2TW13YB 600x300
2TW13YC 600x300
2TW13YD 600x300
2TW13YE 600x300
2TW13YF 600x300
2TW13YG 600x300
2TW13YH 600x300
2TW13YJ 600x300
2TW13YK 600x300
2TW13YL 600x300
2TW13YM 600x300
2TW13YN 600x300
2TW13YP 600x300
2TW13YQ 600x300
2TW13YR 600x300
2TW13YS 600x300
2TW13YT 600x300
2TW13YU 600x300
2TW13YV 600x300
2TW13YW 600x300
2TW13YX 600x300
2TW13YY 600x300
2TW13YZ 600x300
2TW13ZA 600x300
2TW13ZB 600x300
2TW13ZC 600x300
2TW13ZD 600x300
2TW13ZE 600x300
2TW13ZF 600x300
2TW13ZG 600x300
2TW13ZH 600x300
2TW13ZJ 600x300
2TW13ZK 600x300
2TW13ZL 600x300
2TW13ZM 600x300
2TW13ZN 600x300
2TW13ZP 600x300
2TW13ZQ 600x300
2TW13ZR 600x300
2TW13ZS 600x300
2TW13ZT 600x300
2TW13ZU 600x300
2TW13ZV 600x300
2TW13ZW 600x300
2TW13ZX 600x300
2TW13ZY 600x300
2TW13ZZ 600x300
2TW13AAA 600x300
2TW13AAB 600x300
2TW13AAC 600x300
2TW13AAD 600x300
2TW13AAE 600x300
2TW13AAF 600x300
2TW13AAG 600x300
2TW13AAH 600x300
2TW13AAJ 600x300
2TW13AAK 600x300
2TW13AAL 600x300
2TW13AAM 600x300
2TW13AAN 600x300
2TW13AAP 600x300
2TW13AAQ 600x300
2TW13AAR 600x300
2TW13AAS 600x300
2TW13AAT 600x300
2TW13AAU 600x300
2TW13AAV 600x300
2TW13AAW 600x300
2TW13AAX 600x300
2TW13AAY 600x300
2TW13AAZ 600x300
2TW13ABA 600x300
2TW13ABB 600x300
2TW13ABC 600x300
2TW13ABD 600x300
2TW13ABE 600x300
2TW13ABF 600x300
2TW13ABG 600x300
2TW13ABH 600x300
2TW13ABJ 600x300
2TW13ABK 600x300
2TW13ABL 600x300
2TW13ABM 600x300
2TW13ABN 600x300
2TW13ABP 600x300
2TW13ABQ 600x300
2TW13ABR 600x300
2TW13ABS 600x300
2TW13ABT 600x300
2TW13ABU 600x300
2TW13ABV 600x300
2TW13ABW 600x300
2TW13ABX 600x300
2TW13ABY 600x300
2TW13ABZ 600x300
2TW13ACA 600x300
2TW13ACB 600x300
2TW13ACC 600x300
2TW13ACD 600x300
2TW13ACE 600x300
2TW13ACF 600x300
2TW13ACG 600x300
2TW13ACH 600x300
2TW13ACJ 600x300
2TW13ACK 600x300
2TW13ACL 600x300
2TW13ACM 600x300
2TW13ACN 600x300
2TW13ACP 600x300
2TW13ACQ 600x300
2TW13ACR 600x300
2TW13ACS 600x300
2TW13ACT 600x300
2TW13ACU 600x300
2TW13ACV 600x300
2TW13ACW 600x300
2TW13ACX 600x300
2TW13ACY 600x300
2TW13ACZ 600x300
2TW13ADA 600x300
2TW13ADB 600x300
2TW13ADC 600x300
2TW13ADD 600x300
2TW13ADE 600x300
2TW13ADF 600x300
2TW13ADG 600x300
2TW13ADH 600x300
2TW13ADJ 600x300
2TW13ADK 600x300
2TW13ADL 600x300
2TW13ADM 600x300
2TW13ADN 600x300
2TW13ADP 600x300
2TW13ADQ 600x300
2TW13ADR 600x300
2TW13ADS 600x300
2TW13ADT 600x300
2TW13ADU 600x300
2TW13ADV 600x300
2TW13ADW 600x300
2TW13ADX 600x300
2TW13ADY 600x300
2TW13ADZ 600x300
2TW13AEA 600x300
2TW13AEB 600x300
2TW13AEC 600x300
2TW13AED 600x300
2TW13AEE 600x300
2TW13AEF 600x300
2TW13AEG 600x300
2TW13AEH 600x300
2TW13AEJ 600x300
2TW13AEK 600x300
2TW13AEL 600x300
2TW13AEM 600x300
2TW13AEN 600x300
2TW13AEP 600x300
2TW13AEQ 600x300
2TW13AER 600x300
2TW13AES 600x300
2TW13AET 600x300
2TW13AEU 600x300
2TW13AEV 600x300
2TW13AEW 600x300
2TW13AEX 600x300
2TW13AEY 600x300
2TW13AEZ 600x300
2TW13AFA 600x300
2TW13AFB 600x300
2TW13AFC 600x300
2TW13AFD 600x300
2TW13AFE 600x300
2TW13AFF 600x300
2TW13AFG 600x300
2TW13AFH 600x300
2TW13AFJ 600x300
2TW13AFK 600x300
2TW13AFL 600x300
2TW13AFM 600x300
2TW13AFN 600x300
2TW13AFP 600x300
2TW13AFQ 600x300
2TW13AFR 600x300
2TW13AFS 600x300
2TW13AFT 600x300
2TW13AFU 600x300
2TW13AFV 600x300
2TW13AFW 600x300
2TW13AFX 600x300
2TW13AFY 600x300
2TW13AFZ 600x300
2TW13AGA 600x300
2TW13AGB 600x300
2TW13AGC 600x300
2TW13AGD 600x300
2TW13AGE 600x300
2TW13AGF 600x300
2TW13AGG 600x300
2TW13AGH 600x300
2TW13AGJ 600x300
2TW13AGK 600x300
2TW13AGL 600x300
2TW13AGM 600x300
2TW13AGN 600x300
2TW13AGP 600x300
2TW13AGQ 600x300
2TW13AGR 600x300
2TW13AGS 600x300
2TW13AGT 600x300
2TW13AGU 600x300
2TW13AGV 600x300
2TW13AGW 600x300
2TW13AGX 600x300
2TW13AGY 600x300
2TW13AGZ 600x300
2TW13AHA 600x300
2TW13AHB 600x300
2TW13AHC 600x300
2TW13AHD 600x300
2TW13AHE 600x300
2TW13AHF 600x300
2TW13AHG 600x300
2TW13AHH 600x300
2TW13AHJ 600x300
2TW13AHK 600x300
2TW13AHL 600x300
2TW13AHM 600x300
2TW13AHN 600x300
2TW13AHP 600x300
2TW13AHQ 600x300
2TW13AHR 600x300
2TW13AHS 600x300
2TW13AHT 600x300
2TW13AHU 600x300
2TW13AHV 600x300
2TW13AHW 600x300
2TW13AHX 600x300
2TW13AHY 600x300
2TW13AHZ 600x300
2TW13AJA 600x300
2TW13AJB 600x300
2TW13AJC 600x300
2TW13AJD 600x300
2TW13AJE 600x300
2TW13AJF 600x300
2TW13AJG 600x300
2TW13AJH 600x300
2TW13AJJ 600x300
2TW13AJK 600x300
2TW13AJL 600x300
2TW13AJM 600x300
2TW13AJN 600x300
2TW13AJP 600x300
2TW13AJQ 600x300
2TW13AJR 600x300
2TW13AJS 600x300
2TW13AJT 600x300
2TW13AJU 600x300
2TW13AJV 600x300
2TW13AJW 600x300
2TW13AJX 600x300
2TW13AJY 600x300
2TW13AJZ 600x300
2TW13AKA 600x300
2TW13AKB 600x300
2TW13AKC 600x300
2TW13AKD 600x300
2TW13AKE 600x300
2TW13AKF 600x300
2TW13AKG 600x300
2TW13AKH 600x300
2TW13AKJ 600x300
2TW13AKK 600x300
2TW13AKL 600x300
2TW13AKM 600x300
2TW13AKN 600x300
2TW13AKP 600x300
2TW13AKQ 600x300
2TW13AKR 600x300
2TW13AKS 600x300
2TW13AKT 600x300
2TW13AKU 600x300
2TW13AKV 600x300
2TW13AKW 600x300
2TW13AKX 600x300
2TW13AKY 600x300
2TW13AKZ 600x300
2TW13ALA 600x300
2TW13ALB 600x300
2TW13ALC 600x300
2TW13ALD 600x300
2TW13ALE 600x300
2TW13ALF 600x300
2TW13ALG 600x300
2TW13ALH 600x300
2TW13ALJ 600x300
2TW13ALK 600x300
2TW13ALL 600x300
2TW13ALM 600x300
2TW13ALN 600x300
2TW13ALP 600x300
2TW13ALQ 600x300
2TW13ALR 600x300
2TW13ALS 600x300
2TW13ALT 600x300
2TW13ALU 600x300
2TW13ALV 600x300
2TW13ALW 600x300
2TW13ALX 600x300
2TW13ALY 600x300
2TW13ALZ 600x300
2TW13AMA 600x300
2TW13AMB 600x300
2TW13AMC 600x300
2TW13AMD 600x300
2TW13AME 600x300
2TW13AMF 600x300
2TW13AMG 600x300
2TW13AMH 600x300
2TW13AMJ 600x300
2TW13AMK 600x300
2TW13AML 600x300
2TW13AMM 600x300
2TW13AMN 600x300
2TW13AMP 600x300
2TW13AMQ 600x300
2TW13AMR 600x300
2TW13AMS 600x300
2TW13AMT 600x300
2TW13AMU 600x300
2TW13AMV 600x300
2TW13AMW 600x300
2TW13AMX 600x300
2TW13AMY 600x300
2TW13AMZ 600x300
2TW13ANA 600x300
2TW13ANB 600x300
2TW13ANC 600x300
2TW13AND 600x300
2TW13ANE 600x300
2TW13ANF 600x300
2TW13ANG 600x300
2TW13ANH 600x300
2TW13ANJ 600x300
2TW13ANK 600x300
2TW13ANL 600x300
2TW13ANM 600x300
2TW13ANN 600x300
2TW13ANP 600x300
2TW13ANQ 600x300
2TW13ANR 600x300
2TW13ANS 600x300
2TW13ANT 600x300
2TW13ANU 600x300
2TW13ANV 600x300
2TW13ANW 600x300
2TW13ANX 600x300
2TW13ANY 600x300
2TW13ANZ 600x300
2TW13APA 600x300
2TW13APB 600x300
2TW13APC 600x300
2TW13APD 600x300
2TW13APE 600x300
2TW13APF 600x300
2TW13APG 600x300
2TW13APH 600x300
2TW13APJ 600x300
2TW13APK 600x300
2TW13APL 600x300
2TW13APM 600x300
2TW13APN 600x300
2TW13APP 600x300
2TW13APQ 600x300
2TW13APR 600x300
2TW13APS 600x300
2TW13APT 600x300
2TW13APU 600x300
2TW13APV 600x300
2TW13APW 600x300
2TW13APX 600x300
2TW13APY 600x300
2TW13APZ 600x300
2TW13AQA 600x300
2TW13AQB 600x300
2TW13AQC 600x300
2TW13AQD 600x300
2TW13AQE 600x300
2TW13AQF 600x300
2TW13AQG 600x300
2TW13AQH 600x300
2TW13AQJ 600x300
2TW13AQK 600x300
2TW13AQL 600x300
2TW13AQM 600x300
2TW13AQN 600x300
2TW13AQP 600x300
2TW13AQQ 600x300
2TW13AQR 600x300
2TW13AQS 600x300
2TW13AQT 600x300
2TW13AQU 600x300
2TW13AQV 600x300
2TW13AQW 600x300
2TW13AQX 600x300
2TW13AQY 600x300
2TW13AQZ 600x300
2TW13ARA 600x300
2TW13ARB 600x300
2TW13ARC 600x300
2TW13ARD 600x300
2TW13ARE 600x300
2TW13ARF 600x300
2TW13ARG 600x300
2TW13ARH 600x300
2TW13ARJ 600x300
2TW13ARK 600x300
2TW13ARL 600x300
2TW13ARM 600x300
2TW13ARN 600x300
2TW13ARP 600x300
2TW13ARQ 600x300
2TW13ARR 600x300
2TW13ARS 600x300
2TW13ART 600x300
2TW13ARU 600x300
2TW13ARV 600x300
2TW13ARW 600x300
2TW13ARX 600x300
2TW13ARY 600x300
2TW13ARZ 600x300
2TW13ASA 600x300
2TW13ASB 600x300
2TW13ASC 600x300
2TW13ASD 600x300
2TW13ASE 600x300
2TW13ASF 600x300
2TW13ASG 600x300
2TW13ASH 600x300
2TW13ASJ 600x300
2TW13ASK 600x300
2TW13ASL 600x300
2TW13ASM 600x300
2TW13ASN 600x300
2TW13ASP 600x300
2TW13ASQ 600x300
2TW13ASR 600x300
2TW13ASS 600x300
2TW13AST 600x300
2TW13ASU 600x300
2TW13ASV 600x300
2TW13ASW 600x300
2TW13ASX 600x300
2TW13ASY 600x300
2TW13ASZ 600x300
2TW13ATA 600x300
2TW13ATB 600x300
2TW13ATC 600x300
2TW13ATD 600x300
2TW13ATE 600x300
2TW13ATF 600x300
2TW13ATG 600x300
2TW13ATH 600x300
2TW13ATJ 600x300
2TW13ATK 600x300
2TW13ATL 600x300
2TW13ATM 600x300
2TW13ATN 600x300
2TW13ATP 600x300
2TW13ATQ 600x300
2TW13ATR 600x300
2TW13ATS 600x300
2TW13ATT 600x300
2TW13ATU 600x300
2TW13ATV 600x300
2TW13ATW 600x300
2TW13ATX 600x300
2TW13ATY 600x300
2TW13ATZ 600x300
2TW13AUA 600x300
2TW13AUB 600x300
2TW13AUC 600x300
2TW13AUD 600x300
2TW13AUE 600x300
2TW13AUF 600x300
2TW13AUG 600x300
2TW13AUH 600x300
2TW13AUJ 600x300
2TW13AUK 600x300
2TW13AUL 600x300
2TW13AUM 600x300
2TW13AUN 600x300
2TW13AUP 600x300
2TW13AUQ 600x300
2TW13AUR 600x300
2TW13AUS 600x300
2TW13AUT 600x300
2TW13AUU 600x300
2TW13AUV 600x300
2TW13AUW 600x300
2TW13AUX 600x300
2TW13AUY 600x300
2TW13AUZ 600x300
2TW13AVA 600x300
2TW13AVB 600x300
2TW13AVC 600x300
2TW13AVD 600x300
2TW13AVE 600x300
2TW13AVF 600x300
2TW13AVG 600x300
2TW13AVH 600x300
2TW13AVJ 600x300
2TW13AVK 600x300
2TW13AVL 600x300
2TW13AVM 600x300
2TW13AVN 600x300
2TW13AVP 600x300
2TW13AVQ 600x300
2TW13AVR 600x300
2TW13AVS 600x300
2TW13AVT 600x300
2TW13AVU 600x300
2TW13AVV 600x300
2TW13AVW 600x300
2TW13AVX 600x300
2TW13AVY 600x300
2TW13AVZ 600x300
2TW13AWA 600x300
2TW13AWB 600x300
2TW13AWC 600x300
2TW13AWD 600x300
2TW13AWE 600x300
2TW13AWF 600x300
2TW13AWG 600x300
2TW13AWH 600x300
2TW13AWJ 600x300
2TW13AWK 600x300
2TW13AWL 600x300
2TW13AWM 600x300
2TW13AWN 600x300
2TW13AWP 600x300
2TW13AWQ 600x300
2TW13AWR 600x300
2TW13AWS 600x300
2TW13AWT 600x300
2TW13AWU 600x300
2TW13AWV 600x300
2TW13AWW 600x300
2TW13AWX 600x300
2TW13AWY 600x300
2TW13AWZ 600x300
2TW13AXA 600x300
2TW13AXB 600x300
2TW13AXC 600x300
2TW13AXD 600x300
2TW13AXE 600x300
2TW13AXF 600x300
2TW13AXG 600x300
2TW13AXH 600x300
2TW13AXJ 600x300
2TW13AXK 600x300
2TW13AXL 600x300
2TW13AXM 600x300
2TW13AXN 600x300
2TW13AXP 600x300
2TW13AXQ 600x300
2TW13AXR 600x300
2TW13AXS 600x300
2TW13AXT 600x300
2TW13AXU 600x300
2TW13AXV 600x300
2TW13AXW 600x300
2TW13AXX 600x300
2TW13AXY 600x300
2TW13AXZ 600x300
2TW13AYA 600x300
2TW13AYB 600x300
2TW13AYC 600x300
2TW13AYD 600x300
2TW13AYE 600x300
2TW13AYF 600x300
2TW13AYG 600x300
2TW13AYH 600x300
2TW13AYJ 600x300
2TW13AYK 600x300
2TW13AYL 600x300
2TW13AYM 600x300
2TW13AYN 600x300
2TW13AYP 600x300
2TW13AYQ 600x300
2TW13AYR 600x300
2TW13AYS 600x300
2TW13AYT 600x300
2TW13AYU 600x300
2TW13AYV 600x300
2TW13AYW 600x300
2TW13AYX 600x300
2TW13AYY 600x300
2TW13AYZ 600x300
2TW13AZA 600x300
2TW13AZB 600x300
2TW13AZC 600x300
2TW13AZD 600x300
2TW13AZE 600x300
2TW13AZF 600x300
2TW13AZG 600x300
2TW13AZH 600x300
2TW13AZJ 600x300
2TW13AZK 600x300
2TW13AZL 600x300
2TW13AZM 600x300
2TW13AZN 600x300
2TW13AZP 600x300
2TW13AZQ 600x300
2TW13AZR 600x300
2TW13AZS 600x300
2TW13AZT 600x300
2TW13AZU 600x300
2TW13AZV 600x300
2TW13AZW 600x300
2TW13AZX 600x300
2TW13AZY 600x300
2TW13AZZ 600x300
2TW13BAA 600x300
2TW13BAB 600x300
2TW13BAC 600x300
2TW13BAD 600x300
2TW13BAE 600x300
2TW13BAF 600x300
2TW13BAG 600x300
2TW13BAH 600x300
2TW13BAJ 600x300
2TW13BAK 600x300
2TW13BAL 600x300
2TW13BAM 600x300
2TW13BAN 600x300
2TW13BAP 600x300
2TW13BAQ 600x300
2TW13BAR 600x300
2TW13BAS 600x300
2TW13BAT 600x300
2TW13BAU 600x300
2TW13BAV 600x300
2TW13BAW 600x300
2TW13BAX 600x300
2TW13BAY 600x300
2TW13BAZ 600x300
2TW13BBA 600x300
2TW13BBB 600x300
2TW13BBC 600x300
2TW13BBD 600x300
2TW13BBE 600x300
2TW13BBF 600x300
2TW13BBG 600x300
2TW13BBH 600x300
2TW13BBJ 600x300
2TW13BBK 600x300
2TW13BBL 600x300
2TW13BBM 600x300
2TW13BBN 600x300
2TW13BBP 600x300
2TW13BBQ 600x300
2TW13BBR 600x300
2TW13BBS 600x300
2TW13BBT 600x300
2TW13BBU 600x300
2TW13BBV 600x300
2TW13BBW 600x300
2TW13BBX 600x300
2TW13BBY 600x300
2TW13BBZ 600x300
2TW13BCA 600x300
2TW13BCB 600x300
2TW13BCC 600x300
2TW13BCD 600x300
2TW13BCE 600x300
2TW13BCF 600x300
2TW13BCG 600x300
2TW13BCH 600x300
2TW13BCJ 600x300
2TW13BCK 600x300
2TW13BCL 600x300
2TW13BCM 600x300
2TW13BCN 600x300
2TW13BCP 600x300
2TW13BCQ 600x300
2TW13BCR 600x300
2TW13BCS 600x300
2TW13BCT 600x300
2TW13BCU 600x300
2TW13BCV 600x300
2TW13BCW 600x300
2TW13BCX 600x300
2TW13BCY 600x300
2TW13BCZ 600x300
2TW13BDA 600x300
2TW13BDB 600x300
2TW13BDC 600x300
2TW13BDD 600x300
2TW13BDE 600x300
2TW13BDF 600x300
2TW13BDG 600x300
2TW13BDH 600x300
2TW13BDJ 600x300
2TW13BDK 600x300
2TW13BDL 600x300
2TW13BDM 600x300
2TW13BDN 600x300
2TW13BDP 600x300
2TW13BDQ 600x300
2TW13BDR 600x300
2TW13BDS 600x300
2TW13BDT 600x300
2TW13BDU 600x300
2TW13BDV 600x300
2TW13BDW 600x300
2TW13BDX 600x300
2TW13BDY 600x300
2TW13BDZ 600x300
2TW13BEA 600x300
2TW13BEB 600x300
2TW13BEC 600x300
2TW13BED 600x300
2TW13BEE 600x300
2TW13BEF 600x300
2TW13BEG 600x300
2TW13BEH 600x300
2TW13BEJ 600x300
2TW13BEK 600x300
2TW13BEL 600x300
2TW13BEM 600x300
2TW13BEN 600x300
2TW13BEP 600x300
2TW13BEQ 600x300
2TW13BER 600x300
2TW13BES 600x300
2TW13BET 600x300
2TW13BEU 600x300
2TW13BEV 600x300
2TW13BEW 600x300
2TW13BEX 600x300
2TW13BEY 600x300
2TW13BEZ 600x300
2TW13BFA 600x300
2TW13BFB 600x300
2TW13BFC 600x300
2TW13BFD 600x300
2TW13BFE 600x300
2TW13BFF 600x300
2TW13BFG 600x300
2TW13BFH 600x300
2TW13BFJ 600x300
2TW13BFK 600x300
2TW13BFL 600x300
2TW13BFM 600x300
2TW13BFN 600x300
2TW13BFP 600x300
2TW13BFQ 600x300
2TW13BFR 600x300
2TW13BFS 600x300
2TW13BFT 600x300
2TW13BFU 600x300
2TW13BFV 600x300
2TW13BFW 600x300
2TW13BFX 600x300
2TW13BFY 600x300
2TW13BFZ 600x300
2TW13BGA 600x300
2TW13BGB 600x300
2TW13BGC 600x300
2TW13BGD 600x300
2TW13BGE 600x300
2TW13BGF 600x300
2TW13BGG 600x300
2TW13BGH 600x300
2TW13BGJ 600x300
2TW13BGK 600x300
2TW13BGL 600x300
2TW13BGM 600x300
2TW13BGN 600x300
2TW13BGP 600x300
2TW13BGQ 600x300
2TW13BGR 600x300
2TW13BGS 600x300
2TW13BGT 600x300
2TW13BGU 600x300
2TW13BGV 600x300
2TW13BGW 600x300
2TW13BGX 600x300
2TW13BGY 600x300
2TW13BGZ

LEGEND :

- E01 = HILIT , HAC-70 CAST IN CHANNEL
- E02 = HILIT , HAC-50 CAST IN CHANNEL
- E04 = CAST-IN HOLDING DOWN BOLT
- E05 = CAST-IN HOLDING DOWN BOLT
- E06 = CAST-IN HOLDING DOWN BOLT
- E07 = CAST-IN HOLDING DOWN BOLT

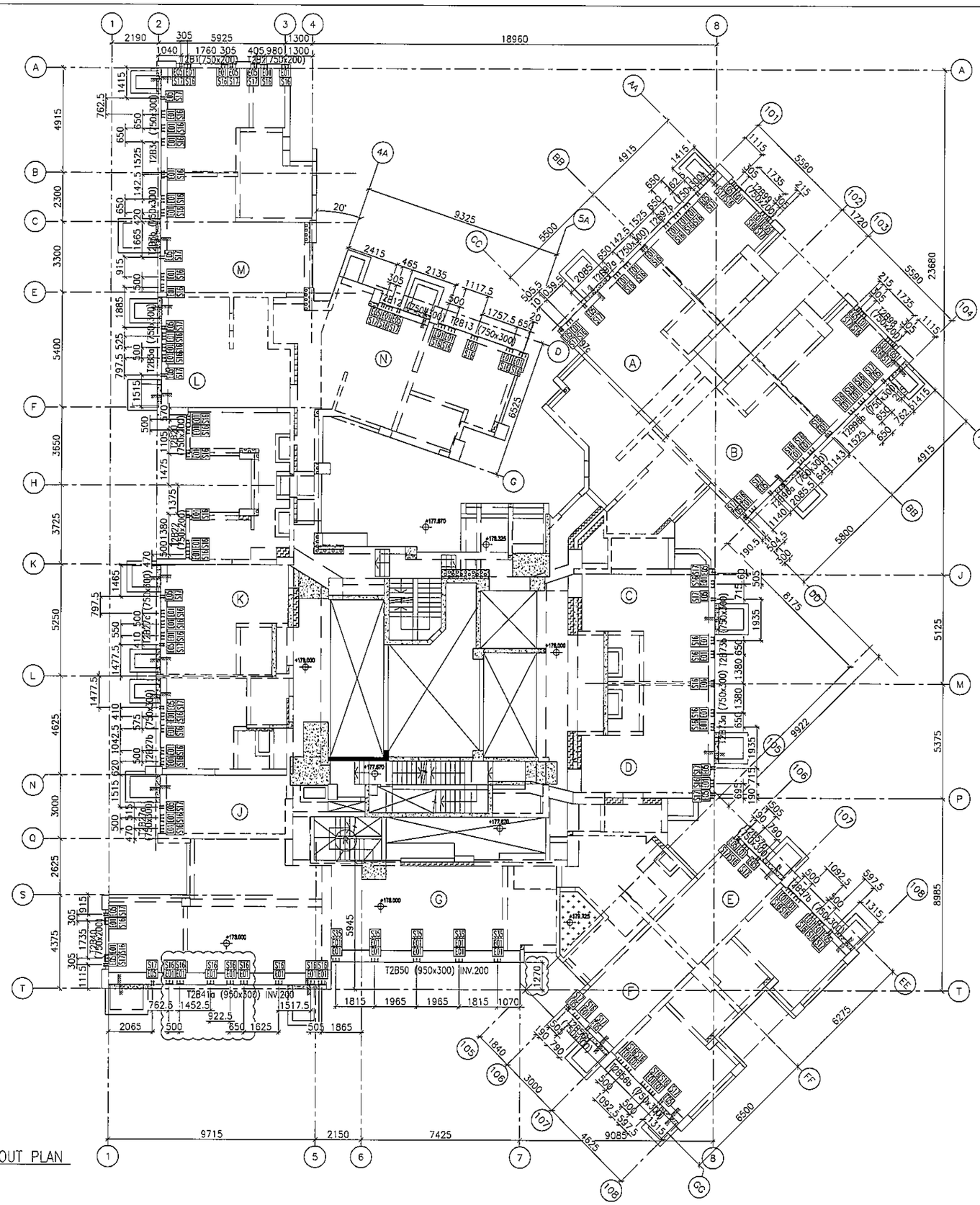
T2B1(750x200)
T2B2 (750x300)
T2B3 (750x300)
T2B4 (750x300)
T2B5 (750x300)
T2B6 (750x300)
T2B7 (750x300)
T2B8 (750x300)
T2B9 (750x300)
T2B10 (750x300)
T2B11 (750x300)
T2B12 (750x300)
T2B13 (750x300)
T2B14 (750x300)
T2B15 (750x300)
T2B16 (750x300)
T2B17 (750x300)
T2B18 (750x300)
T2B19 (750x300)
T2B20 (750x300)
T2B21 (750x300)
T2B22 (750x300)
T2B23 (750x300)
T2B24 (750x300)
T2B25 (750x300)
T2B26 (750x300)
T2B27 (750x300)
T2B28 (750x300)
T2B29 (750x300)
T2B30 (750x300)
T2B31 (750x300)
T2B32 (750x300)
T2B33 (750x300)
T2B34 (750x300)
T2B35 (750x300)
T2B36 (750x300)
T2B37 (750x300)
T2B38 (750x300)
T2B39 (750x300)
T2B40 (750x300)
T2B41a (950x300) INV.200
T2B41b (950x300) INV.200
T2B42 (750x300)
T2B43 (750x300)
T2B44 (750x300)
T2B45 (750x300)
T2B46 (750x300)
T2B47 (750x300)
T2B48 (750x300)
T2B49 (750x300)
T2B50 (950x300) INV.200
T2B51 (750x300)
T2B52 (750x300)
T2B53 (750x300)
T2B54 (750x300)
T2B55 (750x300)
T2B56 (750x300)
T2B57 (750x300)
T2B58 (750x300)
T2B59 (750x300)
T2B60 (750x300)
T2B61 (750x300)
T2B62 (750x300)
T2B63 (750x300)
T2B64 (750x300)
T2B65 (750x300)
T2B66 (750x300)
T2B67 (750x300)
T2B68 (750x300)
T2B69 (750x300)
T2B70 (750x300)

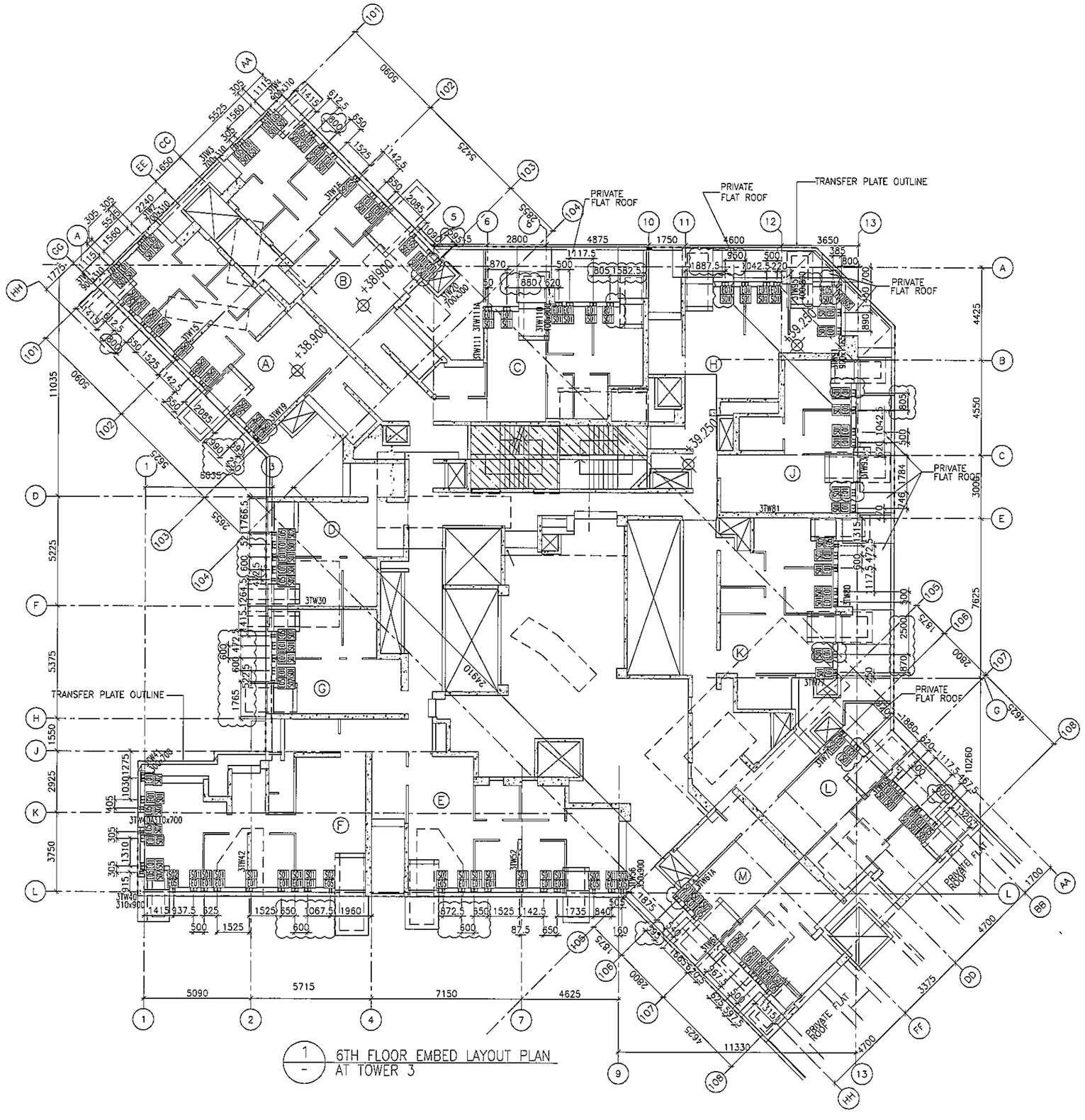

1 / - 6TH FLOOR EMBED LAYOUT PLAN AT TOWER 3

FLOOR LEVEL (S.F.L.)(T3)

FLOOR NUMBERING	LEVEL (mPD)
6/F	+38.900

B.D. REF :

CLIENT :
信和置業有限公司
Sino Land Company Limited

ARCHITECT :
WONG TUNG & PARTNERS LIMITED
ARCHITECTS & PLANNERS

MAIN CONTRACTOR :
CR Construction Company Limited

STRUCTURAL ENGINEER :
AECOM

FACADE CONSULTANT:
AECOM

NOTE :
1. ALL DIMENSIONS ARE IN mm.
2. ALL ELEVATIONS ARE VIEWED FROM OUTSIDE.
3. ALL DIMENSIONS TO BE VERIFIED ON SITE BEFORE FABRICATION.

LEGEND :
X1 — DETAIL MARK NO.
X001 — REFER SHEET NO.

1. F.F.L. --FINISHED FLOOR LEVEL
2. S.F.L. --STRUCTURAL FLOOR LEVEL
3. /R --REVERSED DETAIL

NO.	DATE	REVISED	BY
J	18/08/2019	GENERAL REVISED	
I	16/07/2019	GENERAL REVISED	
H	28/01/2019	GENERAL REVISED	
G	08/11/2018	GENERAL REVISED	
F	11/10/2018	GENERAL REVISED	
E	26/9/2018	GENERAL REVISED	
D	14/9/2018	GENERAL REVISED	
C	04/9/2018	GENERAL REVISED	
B	24/8/2018	GENERAL REVISED	
A	31/7/2018	GENERAL REVISED	

JOB NO. : J-837

PROJECT :
URA KWUN TONG TOWN CENTRE REDEVELOPMENT (AREA 2 & 3) AT NKIL 6514, KWUN TONG, KWLOON

TITLE :
6TH FLOOR EMBED LAYOUT PLAN OF CURTAIN WALL AT TOWER 3

DATE : 04-JUL-18	SCALE : 1:100 (A1)
DRAWN BY : ASING	CHECKED BY : -

美特鋁質有限公司
MIDI ALUMINIUM FABRICATOR LTD.
Units 6-8, Sunray Industrial Centre, 1/F
610 Cha Kwo Ling Road, Kowloon
Tel:23489211-4 Fax:(852)27727666

DWG NO. : J837-CW-1301 REV. : J

LEGEND :

- EO1 = HILIT , HAC-70 CAST IN CHANNEL
- EO2 = HILIT , HAC-50 CAST IN CHANNEL
- EO3 = GAL. MILD STEEL CAST IN EMBED
- EO4 = CAST-IN HOLDING DOWN BOLT
- EO5 = CAST-IN HOLDING DOWN BOLT

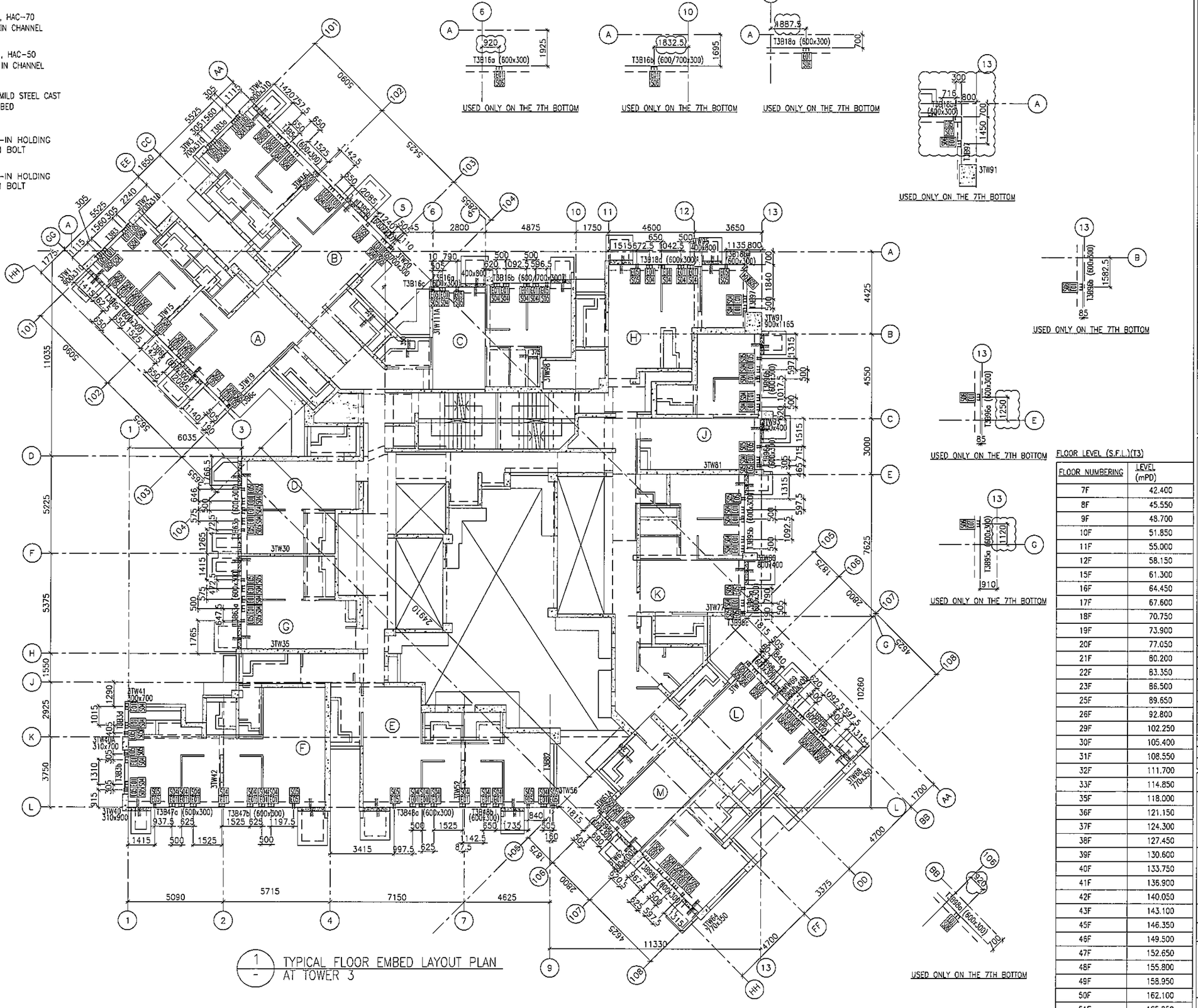

FLOOR NUMBERING	LEVEL (mPD)
7F	42.400
8F	45.550
9F	48.700
10F	51.850
11F	55.000
12F	58.150
15F	61.300
16F	64.450
17F	67.600
18F	70.750
19F	73.900
20F	77.050
21F	80.200
22F	83.350
23F	86.500
25F	89.650
26F	92.800
29F	102.250
30F	105.400
31F	108.550
32F	111.700
33F	114.850
35F	118.000
36F	121.150
37F	124.300
38F	127.450
39F	130.600
40F	133.750
41F	136.900
42F	140.050
43F	143.100
45F	146.350
46F	149.500
47F	152.650
48F	155.800
49F	158.950
50F	162.100
51F	165.250

1 / - TYPICAL FLOOR EMBED LAYOUT PLAN AT TOWER 3

B.D. REF :

CLIENT : 信和置業有限公司 Sino Land Company Limited

ARCHITECT : WONG TUNG & PARTNERS LIMITED ARCHITECTS & PLANNERS

MAIN CONTRACTOR : CR Construction Company Limited

STRUCTURAL ENGINEER : AECOM

FACADE CONSULTANT: AECOM

NOTE :
1. ALL DIMENSIONS ARE IN mm.
2. ALL ELEVATIONS ARE VIEWED FROM OUTSIDE.
3. ALL DIMENSIONS TO BE VERIFIED ON SITE BEFORE FABRICATION.

LEGEND :
- X1 / XD01 — DETAIL MARK NO. / REFER SHEET NO.
1. F.F.L. --FINISHED FLOOR LEVEL
2. S.F.L. --STRUCTURAL FLOOR LEVEL
3. /R --REVERSED DETAIL

NO.	DATE	REVISED	BY
J	18/08/2019	GENERAL REVISED	
I	16/07/2019	GENERAL REVISED	
H	28/01/2019	GENERAL REVISED	
G	08/11/2018	GENERAL REVISED	
F	17/10/2018	GENERAL REVISED	
E	11/10/2018	GENERAL REVISED	
D	14/9/2018	GENERAL REVISED	
C	04/9/2018	GENERAL REVISED	
B	24/8/2018	GENERAL REVISED	
A	31/7/2018	GENERAL REVISED	

JOB NO. : J-837

PROJECT : URA KWUN TONG TOWN CENTRE REDEVELOPMENT (AREA 2 & 3) AT NKIL 6514, KWUN TONG, KWLOON

TITLE : TYPICAL FLOOR EMBED LAYOUT PLAN OF CURTAIN WALL AT TOWER 3

DATE : 04-JUL-18 | SCALE : 1:100 (A1)

DRAWN BY : ASING | CHECKED BY : -

美特鋁質有限公司 MIDI ALUMINIUM FABRICATOR LTD.
Units 6-8, Sunray Industrial Centre, 1/F
610 Cha Kwo Ling Road, Kowloon
Tel:23489211-4 Fax:(852)27727666

DWG NO. : J837-CW-1302 | REV. : J

LEGEND :

- E01 = HILIT , HAC-70 CAST IN CHANNEL
- E02 = HILIT , HAC-50 CAST IN CHANNEL
- E03 = GAL. MILD STEEL CAST IN EMBED
- E04 = CAST-IN HOLDING DOWN BOLT
- E05 = CAST-IN HOLDING DOWN BOLT
- E06 = CAST-IN HOLDING DOWN BOLT
- E07 = CAST-IN HOLDING DOWN BOLT

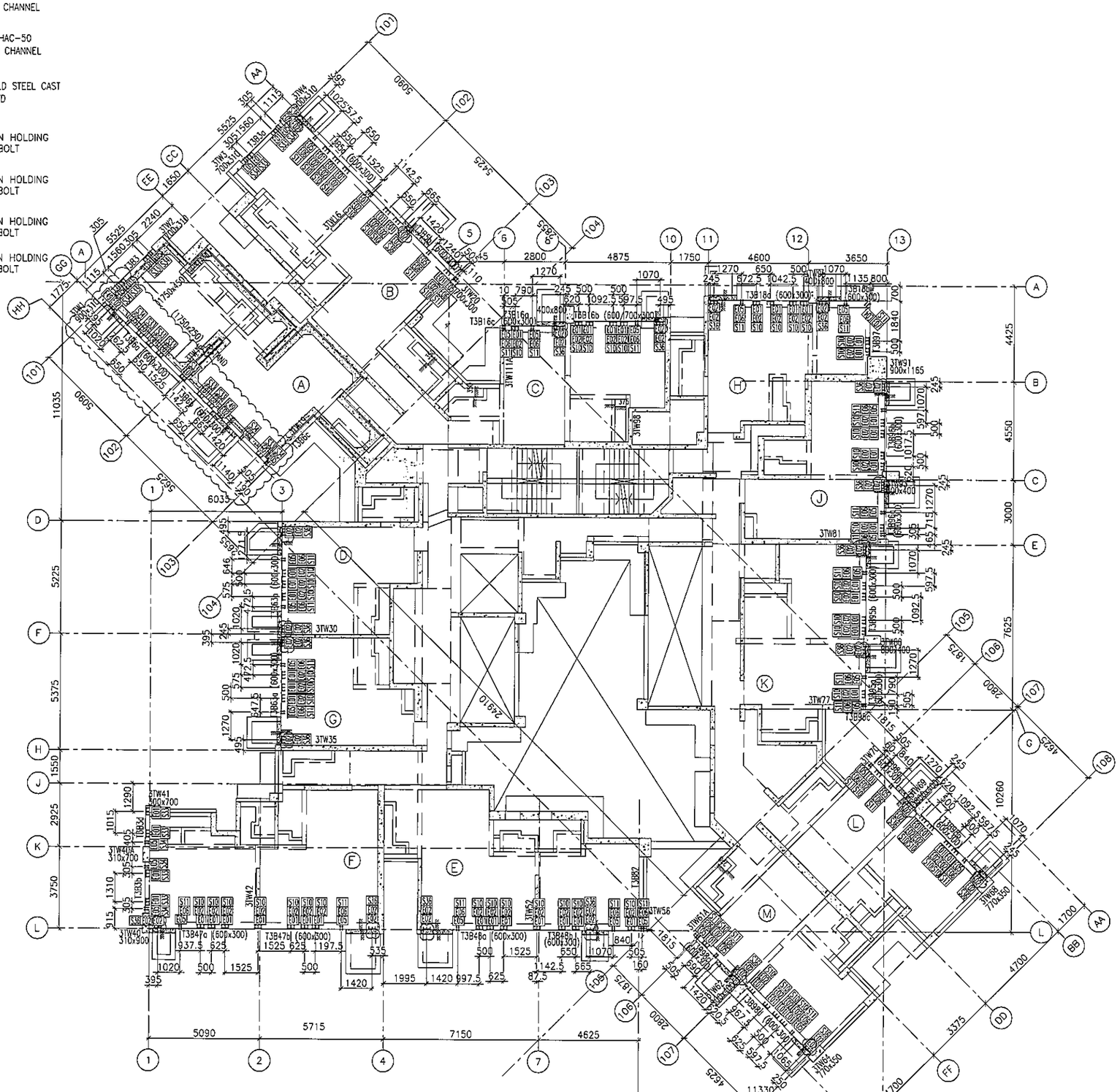

1 / - 27TH FLOOR EMBED LAYOUT PLAN AT TOWER 3

FLOOR LEVEL (S.F.L)(T3)

FLOOR NUMBERING	LEVEL (mPD)
27F	+95.95

B.D. REF :

CLIENT : 信和置業有限公司 Sino Land Company Limited

ARCHITECT : WONG TUNG & PARTNERS LIMITED ARCHITECTS & PLANNERS

MAIN CONTRACTOR : CR Construction Company Limited

STRUCTURAL ENGINEER : AECOM

FACADE CONSULTANT: AECOM

NOTE :
1. ALL DIMENSIONS ARE IN mm.
2. ALL ELEVATIONS ARE VIEWED FROM OUTSIDE.
3. ALL DIMENSIONS TO BE VERIFIED ON SITE BEFORE FABRICATION.

LEGEND :
- X1 / X001 — DETAIL MARK NO. / REFER SHEET NO.
1. F.F.L. --FINISHED FLOOR LEVEL
2. S.F.L. --STRUCTURAL FLOOR LEVEL
3. /R --REVERSED DETAIL

NO.	DATE	REVISED	BY
H	18/08/2019	GENERAL REVISED	
G	21/02/2019	GENERAL REVISED	
F	19/01/2019	GENERAL REVISED	
E	08/11/2018	GENERAL REVISED	
D	17/10/2018	GENERAL REVISED	
C	11/10/2018	GENERAL REVISED	
B	14/9/2018	GENERAL REVISED	
A	07/9/2018	GENERAL REVISED	

JOB NO. : J-837

PROJECT : URA KWUN TONG TOWN CENTRE REDEVELOPMENT (AREA 2 & 3) AT NKIL 6514, KWUN TONG, KWLOON

TITLE : 27TH FLOOR EMBED LAYOUT PLAN OF CURTAIN WALL AT TOWER 3

DATE : 10-SEP-18	SCALE : 1:100 (A1)
DRAWN BY : ASING	CHECKED BY : -

美特鋁質有限公司 MIDI ALUMINIUM FABRICATOR LTD.
Units 6-8, Sunray Industrial Centre, 1/F
610 Cha Kwo Ling Road, Kowloon
Tel:23489211-4 Fax:(852)27727666

DWG NO. : J837-CW-1303 REV. : H

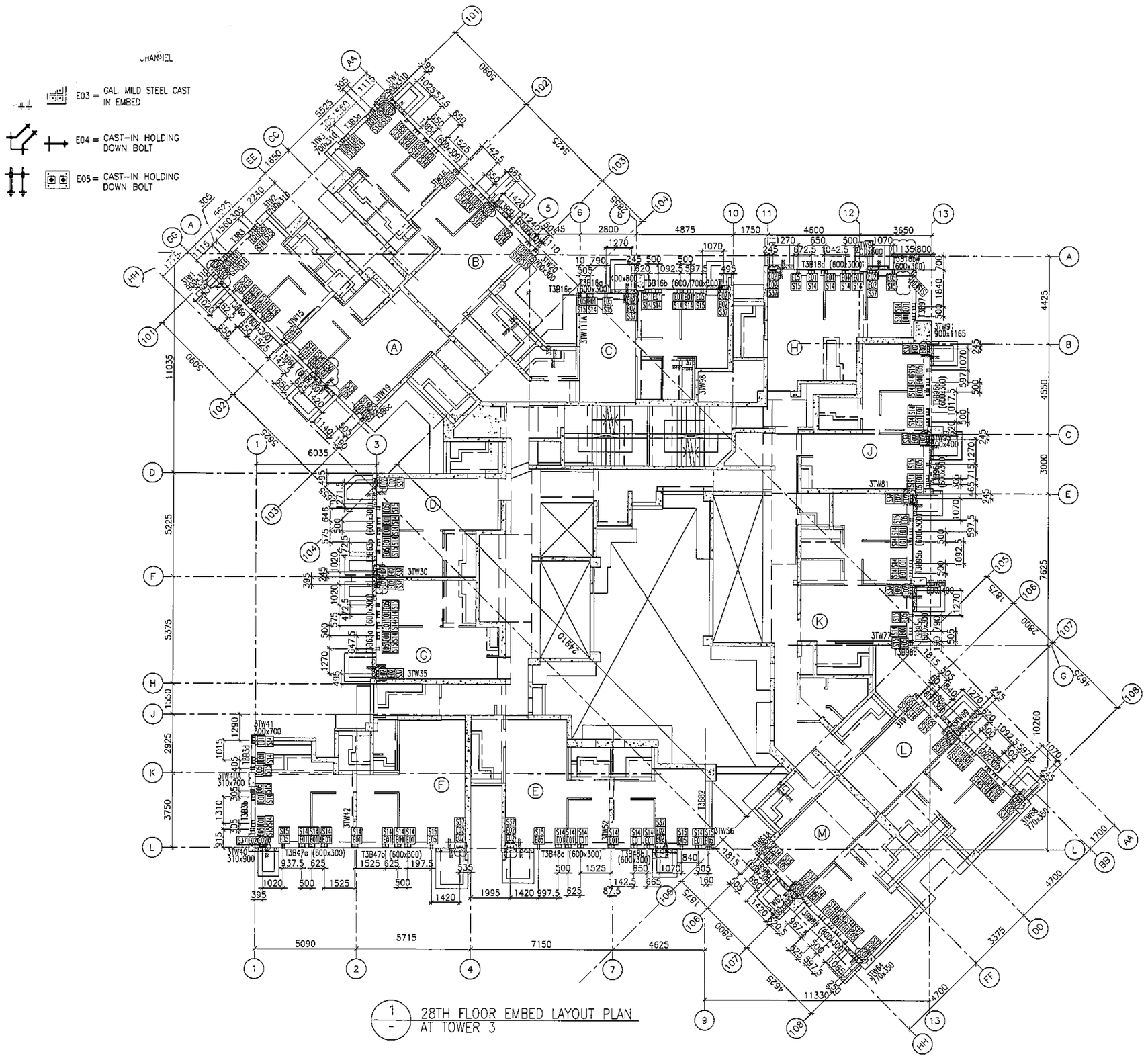

1 / - 28TH FLOOR EMBED LAYOUT PLAN AT TOWER 3

FLOOR LEVEL (S.F.L.)(T3)

FLOOR NUMBERING	LEVEL (mPD)
28F	+99.100

B.D. REF :

CLIENT :
信和置業有限公司
Sino Land Company Limited

ARCHITECT :
WONG TUNG & PARTNERS LIMITED
ARCHITECTS & PLANNERS

MAIN CONTRACTOR :
CR Construction Company Limited

STRUCTURAL ENGINEER :
AECOM

FACADE CONSULTANT:
AECOM

NOTE :
1. ALL DIMENSIONS ARE IN mm.
2. ALL ELEVATIONS ARE VIEWED FROM OUTSIDE.
3. ALL DIMENSIONS TO BE VERIFIED ON SITE BEFORE FABRICATION.

LEGEND :
X1 — DETAIL MARK NO.
X001 — REFER SHEET NO.

1. F.F.L. -- FINISHED FLOOR LEVEL
2. S.F.L. -- STRUCTURAL FLOOR LEVEL
3. (R) -- REVERSED DETAIL

NO.	DATE	REVISED	BY
E	18/08/2019	GENERAL REVISED	
D	21/02/2019	GENERAL REVISED	
C	17/10/2018	GENERAL REVISED	
B	11/10/2018	GENERAL REVISED	
A	14/9/2018	GENERAL REVISED	

JOB NO. : J-837

PROJECT :
URA KWUN TONG TOWN CENTRE REDEVELOPMENT (AREA 2 & 3) AT NKIL 6514, KWUN TONG, KWLOON

TITLE :
28TH FLOOR EMBED LAYOUT PLAN OF CURTAIN WALL AT TOWER 3

DATE : 10-SEP-18 | SCALE : 1:100 (A1)

DRAWN BY : ASING | CHECKED BY : -

美特鋁質有限公司
MIDI ALUMINIUM FABRICATOR LTD.
Units 6-8, Sunray Industrial Centre, 1/F
610 Cha Kwo Ling Road, Kowloon
Tel:23489211-4 Fax:(852)27727666

DWG NO. : J837-CW-1304 | REV. : E

LEGEND :

- E01 = HILIT , HAC-70 CAST IN CHANNEL
- E02 = HILIT , HAC-50 CAST IN CHANNEL
- E03 = GAL. MILD STEEL CAST IN EMBED
- E04 = CAST-IN HOLDING DOWN BOLT
- E05 = CAST-IN HOLDING DOWN BOLT

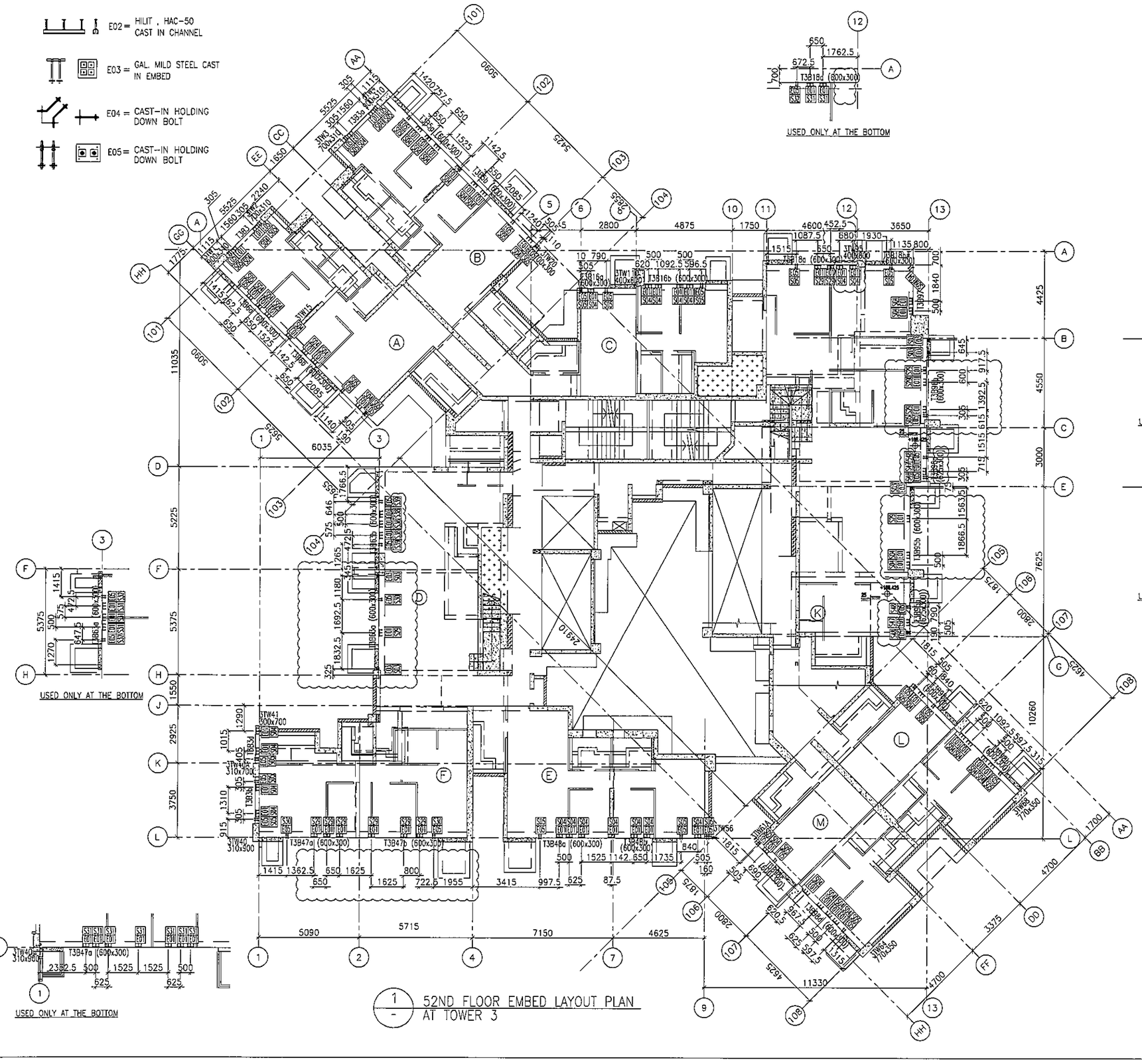

1 / - 52ND FLOOR EMBED LAYOUT PLAN AT TOWER 3

FLOOR LEVEL (S.F.L.)(T3)

FLOOR NUMBERING	LEVEL (mPD)
52F	+168.400

B.D. REF :

CLIENT : 信和置業有限公司 Sino Land Company Limited

ARCHITECT : WONG TUNG & PARTNERS LIMITED ARCHITECTS & PLANNERS

MAIN CONTRACTOR : CR Construction Company Limited

STRUCTURAL ENGINEER : AECOM

FACADE CONSULTANT: AECOM

NOTE :
1. ALL DIMENSIONS ARE IN mm.
2. ALL ELEVATIONS ARE VIEWED FROM OUTSIDE.
3. ALL DIMENSIONS TO BE VERIFIED ON SITE BEFORE FABRICATION.

LEGEND :
- X1 / X001 — DETAIL MARK NO. / REFER SHEET NO.
1. F.F.L. --- FINISHED FLOOR LEVEL
2. S.F.L. --- STRUCTURAL FLOOR LEVEL
3. /R --- REVERSED DETAIL

NO.	DATE	REVISED	BY
I	20/06/2019	GENERAL REVISED	
H	03/06/2019	GENERAL REVISED	
G	22/05/2019	GENERAL REVISED	
F	19/05/2019	GENERAL REVISED	
E	07/04/2019	GENERAL REVISED	
D	13/01/2019	GENERAL REVISED	
C	22/12/2018	GENERAL REVISED	
B	17/10/2018	GENERAL REVISED	
A	11/10/2018	GENERAL REVISED	

JOB NO. : J-837

PROJECT : URA KWUN TONG TOWN CENTRE REDEVELOPMENT (AREA 2 & 3) AT NKIL 6514, KWUN TONG, KWLOON

TITLE : 52ND FLOOR EMBED LAYOUT PLAN OF CURTAIN WALL AT TOWER 3

DATE : 10-SEP-18 | SCALE : 1:100 (A1)

DRAWN BY : ASING | CHECKED BY : -

美特鋁製有限公司 MIDI ALUMINIUM FABRICATOR LTD.
Units 6-8, Sunray Industrial Centre, 1/F
610 Cha Kwo Ling Road, Kowloon
Tel:23489211-4 Fax:(852)27727666

DWG NO. : J837-CW-1305 | REV. : I

LEGEND :

- E01 = HILIT , HAC-70 CAST IN CHANNEL
- E02 = HILIT , HAC-50 CAST IN CHANNEL
- E04 = CAST-IN HOLDING DOWN BOLT
- E05 = CAST-IN HOLDING DOWN BOLT
- E06 = CAST-IN HOLDING DOWN BOLT
- E07 = CAST-IN HOLDING DOWN BOLT

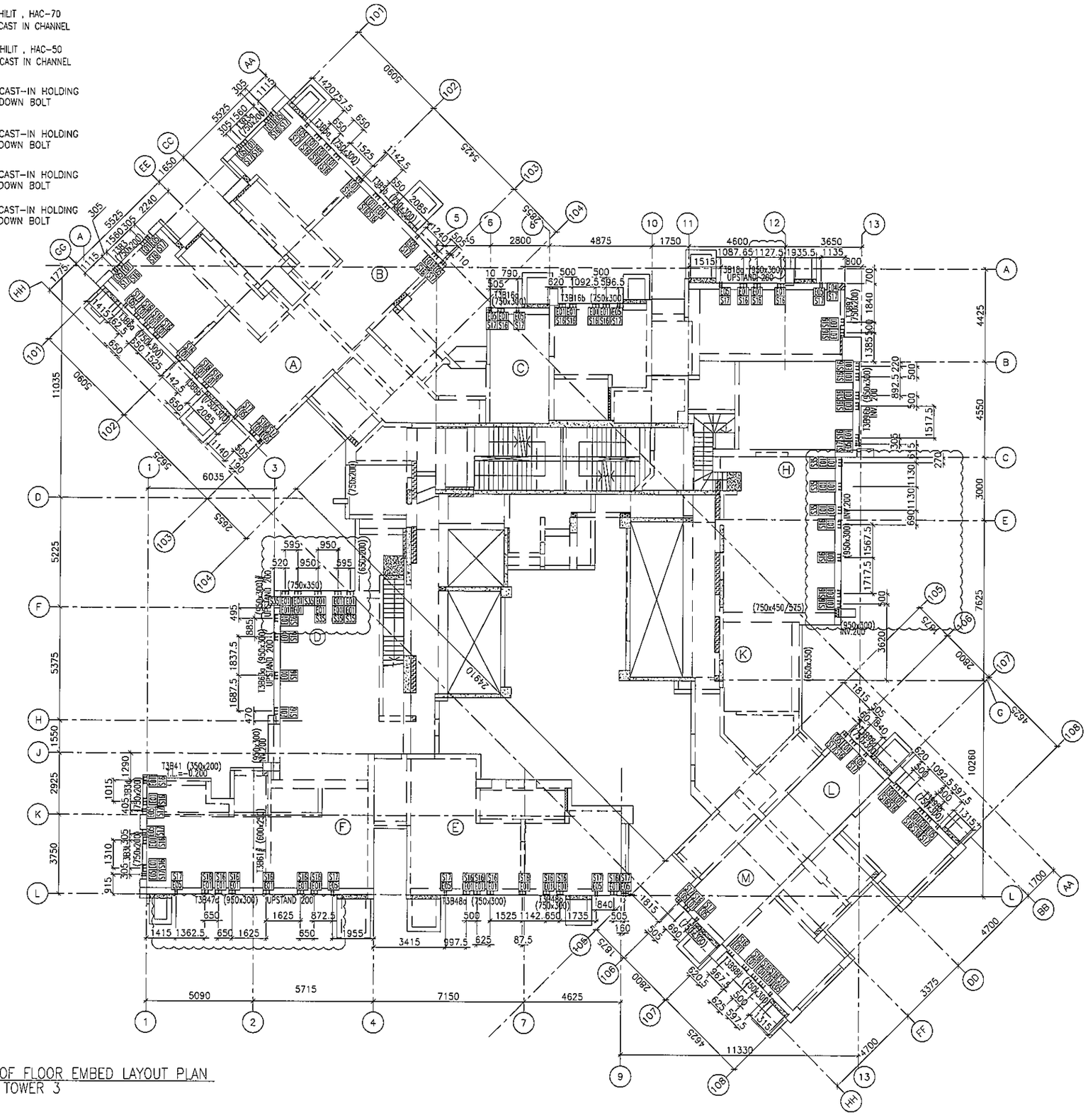

1 / - ROOF FLOOR EMBED LAYOUT PLAN AT TOWER 3

FLOOR LEVEL (S.F.L.)(T3)

FLOOR NUMBERING	LEVEL (mPD)
RF	+171.700

B.D. REF :

CLIENT : 信和置業有限公司 Sino Land Company Limited

ARCHITECT : WONG TUNG & PARTNERS LIMITED ARCHITECTS & PLANNERS

MAIN CONTRACTOR : CR Construction Company Limited

STRUCTURAL ENGINEER : AECOM

FACADE CONSULTANT: AECOM

NOTE :
1. ALL DIMENSIONS ARE IN mm.
2. ALL ELEVATIONS ARE VIEWED FROM OUTSIDE.
3. ALL DIMENSIONS TO BE VERIFIED ON SITE BEFORE FABRICATION.

LEGEND :
- X1 / X001 — DETAIL MARK NO. / REFER SHEET NO.
1. F.F.L. --FINISHED FLOOR LEVEL
2. S.F.L. --STRUCTURAL FLOOR LEVEL
3. /R --REVERSED DETAIL

NO.	DATE	REVISED	BY
G	20/06/2019	GENERAL REVISED	
F	03/06/2019	GENERAL REVISED	
E	22/05/2019	GENERAL REVISED	
D	19/05/2019	GENERAL REVISED	
C	07/04/2019	GENERAL REVISED	
B	22/12/2018	GENERAL REVISED	
A	11/10/2018	GENERAL REVISED	

JOB NO. : J-837

PROJECT : URA KWUN TONG TOWN CENTRE REDEVELOPMENT (AREA 2 & 3) AT NKIL 6514, KWUN TONG, KWLOON

TITLE : ROOF FLOOR EMBED LAYOUT PLAN OF CURTAIN WALL AT TOWER 3

DATE : 10-SEP-18 | SCALE : 1:100 (A1)

DRAWN BY : ASING | CHECKED BY : -

美特鋁質有限公司 MIDI ALUMINIUM FABRICATOR LTD.
Units 6-8, Sunray Industrial Centre, 1/F
610 Cha Kwo Ling Road, Kowloon
Tel:23489211-4 Fax:(852)27727666

DWG NO. : J837-CW-1306 | REV. : G

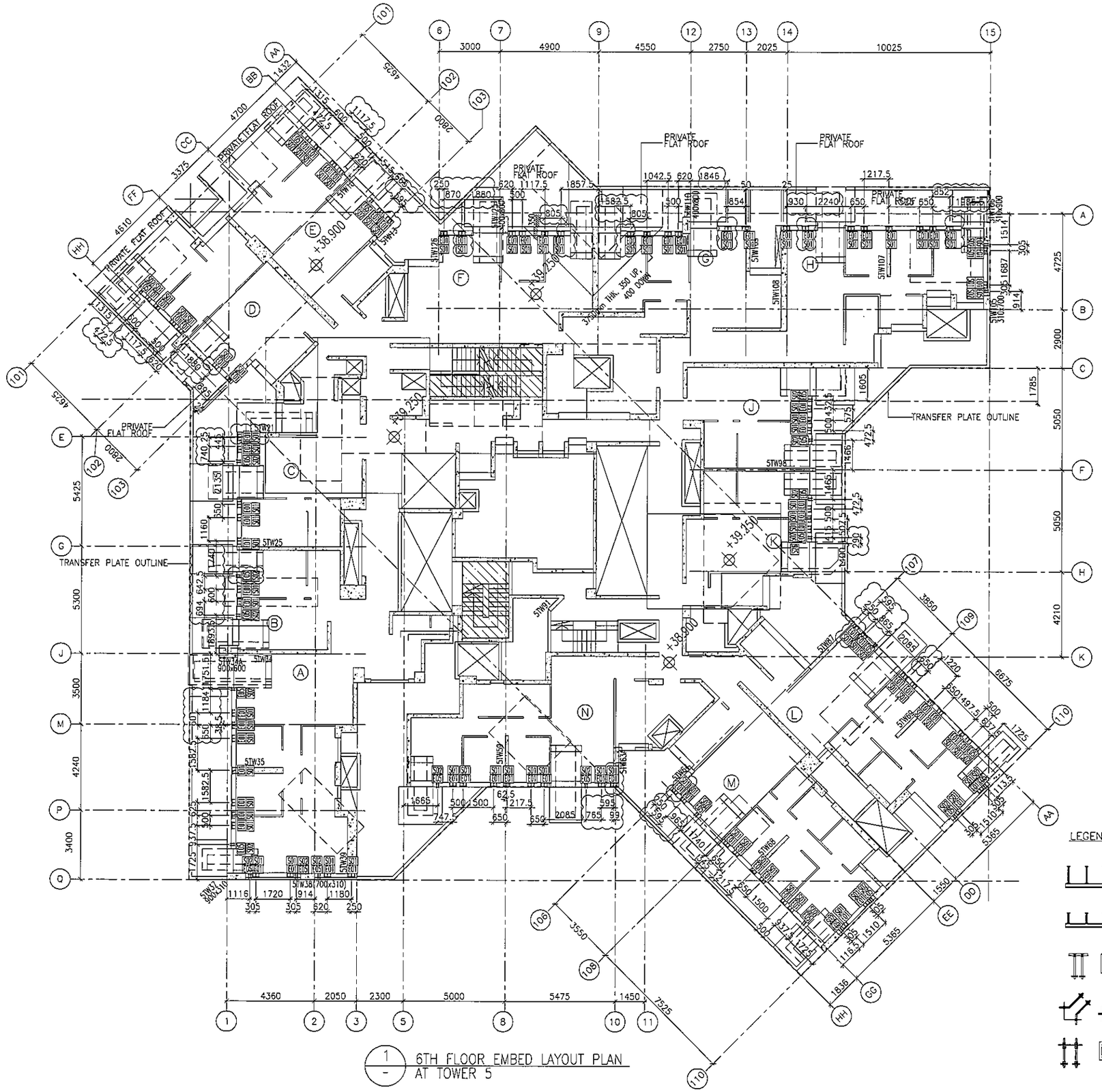
PRIVATE FLAT ROOF
TRANSFER PLATE OUTLINE
+38.900
+39.150
+39.250
3 3.5mm THK. 350 UP, 400 DOWN
5TW25
5TW35
5TW39
5TW91
5TW92
5TW95
5TW98
5TW107
5TW108
5TW109
5TW110
5TW111
5TW112
5TW113
5TW114
5TW115
5TW116
5TW117
5TW118
5TW119
5TW120
5TW121
5TW122
5TW123
5TW124
5TW125
5TW126
5TW127
5TW128
5TW129
5TW130
5TW131
5TW132
5TW133
5TW134
5TW135
5TW136
5TW137
5TW138
5TW139
5TW140
5TW141
5TW142
5TW143
5TW144
5TW145
5TW146

LEGEND :

- E01 = HILIT , HAC-70 CAST IN CHANNEL
- E02 = HILIT , HAC-50 CAST IN CHANNEL
- E03 = GAL. MILD STEEL CAST IN EMBED
- E04 = CAST-IN HOLDING DOWN BOLT
- E05 = CAST-IN HOLDING DOWN BOLT

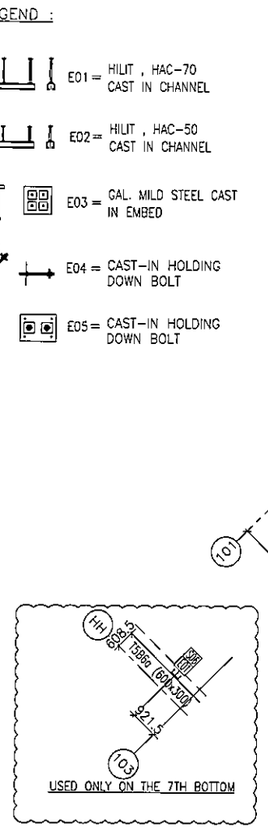

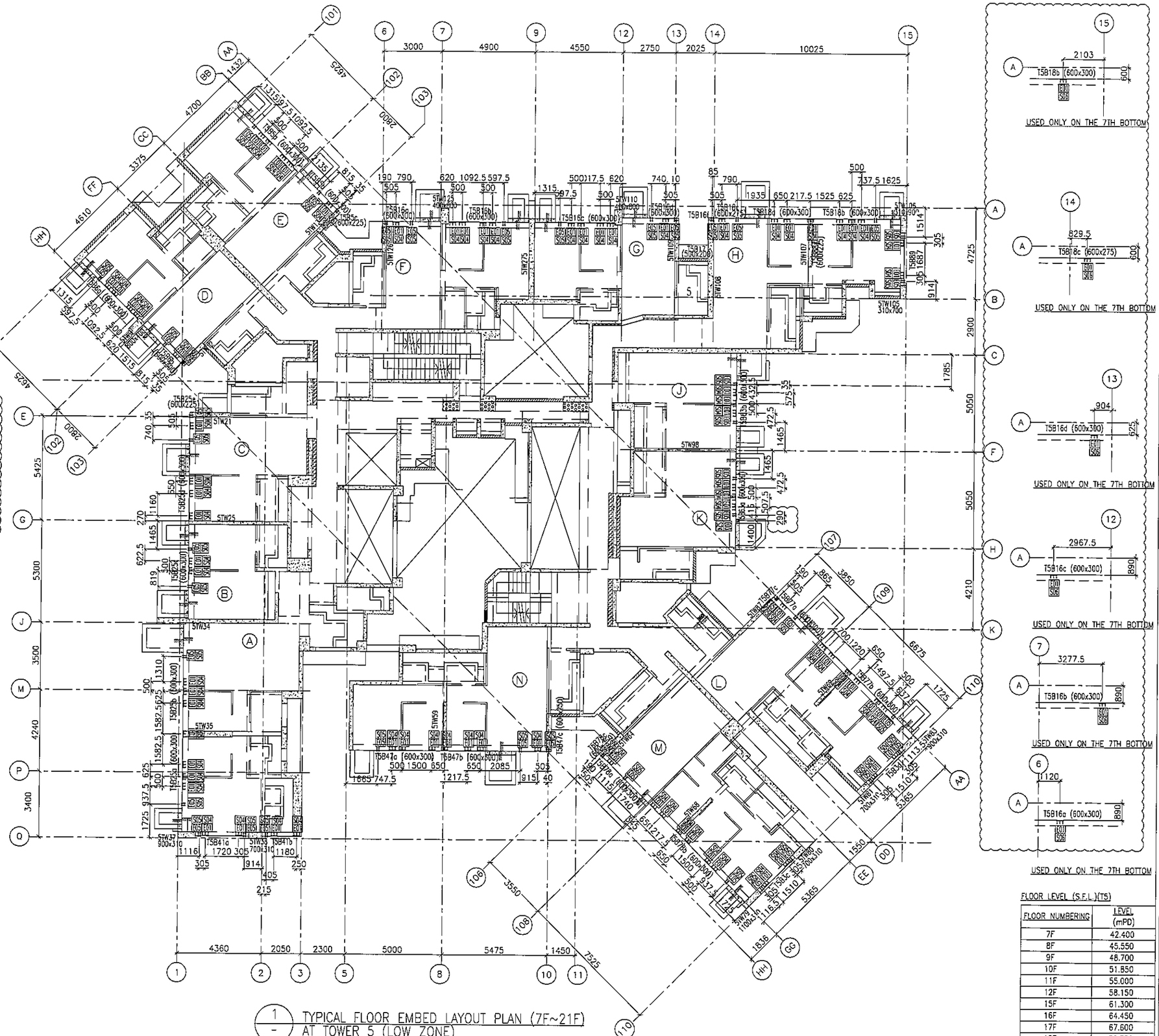

1 / - TYPICAL FLOOR EMBED LAYOUT PLAN (7F~21F) AT TOWER 5 (LOW ZONE)

FLOOR LEVEL (S.F.L.)(T5)

FLOOR NUMBERING	LEVEL (mPD)
7F	42.400
8F	45.550
9F	48.700
10F	51.850
11F	55.000
12F	58.150
15F	61.300
16F	64.450
17F	67.600
18F	70.750
19F	73.900
20F	77.050
21F	80.200

B.D. REF :

CLIENT : 信和置業有限公司 Sino Land Company Limited

ARCHITECT : WONG TUNG & PARTNERS LIMITED ARCHITECTS & PLANNERS

MAIN CONTRACTOR : CR Construction Company Limited

STRUCTURAL ENGINEER : AECOM

FACADE CONSULTANT: AECOM

NOTE :
1. ALL DIMENSIONS ARE IN mm.
2. ALL ELEVATIONS ARE VIEWED FROM OUTSIDE.
3. ALL DIMENSIONS TO BE VERIFIED ON SITE BEFORE FABRICATION.

LEGEND :
- (X1 / X001) — DETAIL MARK NO. / REFER SHEET NO.
1. F.F.L. --FINISHED FLOOR LEVEL
2. S.F.L. --STRUCTURAL FLOOR LEVEL
3. (/R) --REVERSED DETAIL

NO.	DATE	REVISED	BY
L	18/08/2019	GENERAL REVISED	
K	16/07/2019	GENERAL REVISED	
J	28/01/2019	GENERAL REVISED	
I	19/01/2019	GENERAL REVISED	
H	22/12/2018	GENERAL REVISED	
G	08/11/2018	GENERAL REVISED	
F	11/10/2018	GENERAL REVISED	
E	8/10/2018	GENERAL REVISED	
D	14/9/2018	GENERAL REVISED	
C	04/9/2018	GENERAL REVISED	
B	24/8/2018	GENERAL REVISED	
A	11/8/2018	GENERAL REVISED	

JOB NO. : J-837

PROJECT : URA KWUN TONG TOWN CENTRE REDEVELOPMENT (AREA 2 & 3) AT NKIL 6514, KWUN TONG, KWLOON

TITLE : TYPICAL FLOOR EMBED LAYOUT PLAN (7F~26F) OF CURTAIN WALL AT TOWER 5

DATE : 04-JUL-18 | SCALE : 1:100 (A1)

DRAWN BY : ASING | CHECKED BY : -

美特鋁質有限公司 MIDI ALUMINIUM FABRICATOR LTD.
Units 6-8, Sunray Industrial Centre, 1/F
610 Cha Kwo Ling Road, Kowloon
Tel:23489211-4 Fax:(852)27727666

DWG NO. : J837-CW-1502 | REV. : L

LEGEND :

- E01 = HILIT , HAC-70 CAST IN CHANNEL
- E02 = HILIT , HAC-50 CAST IN CHANNEL
- E03 = GAL. MILD STEEL CAST IN EMBED
- E04 = CAST-IN HOLDING DOWN BOLT
- E05 = CAST-IN HOLDING DOWN BOLT

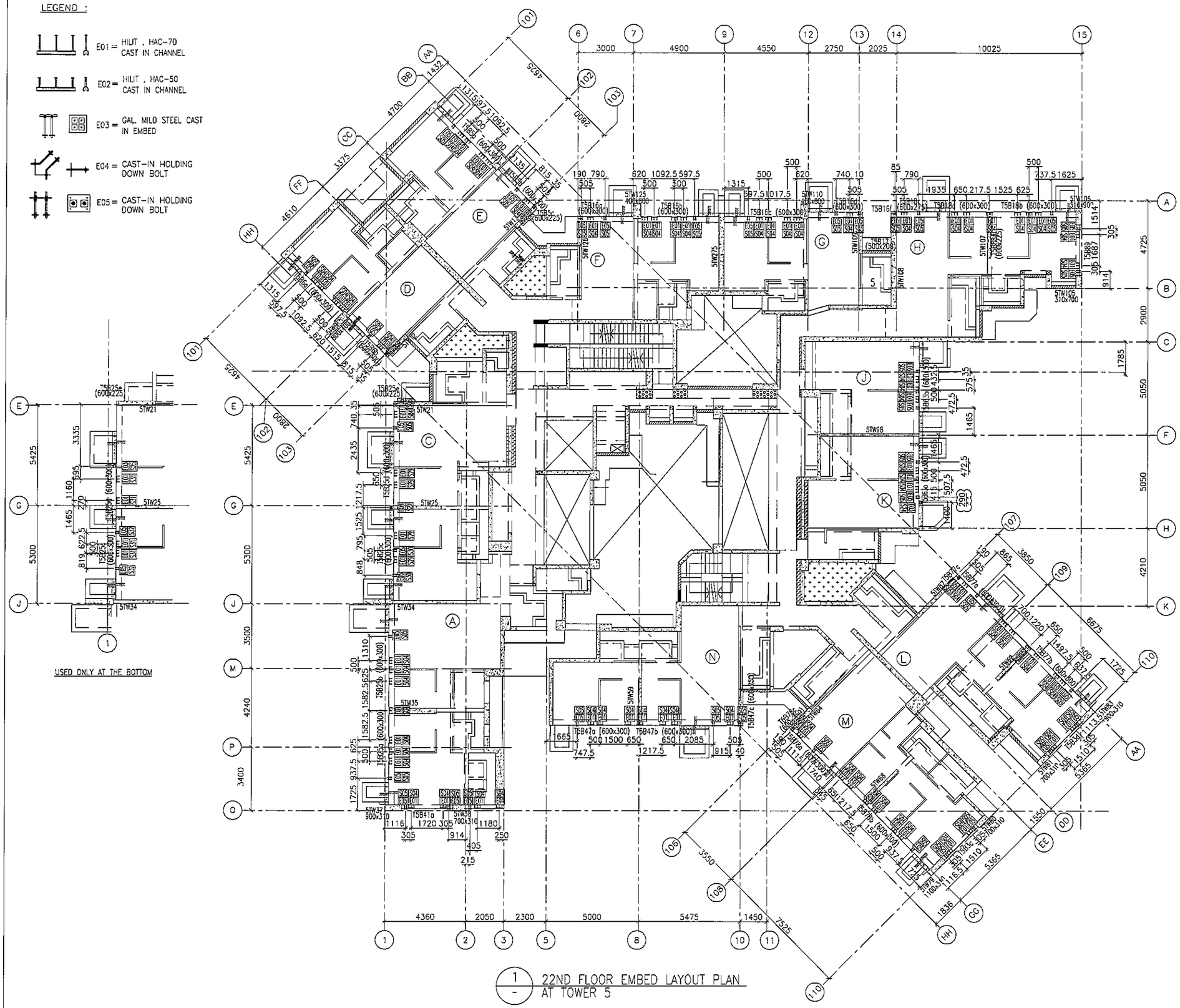
6 7 9 12 13 14 15
3000 4900 4550 2750 2025 10025
101 102 103 106 107 108 109 110
A B C D E F G H J K L M N P Q
1 2 3 5 8 10 11
4360 2050 2300 5000 5475 1450
T5B25a (600x225)
5TW21
5TW25
5TW34
T5B25b (600x225)
T5B16a (600x300)
T5B16b (600x300)
T5B16c (600x300)
T5B16d (600x300)
T5B16e (600x300)
T5B16f (600x300)
T5B16g (600x300)
T5B16h (600x300)
T5B17 (500x206)
T5B18a (600x225)
T5B18b (600x300)
T5B47a (600x300)
T5B47b (600x300)
T5B47c (600x300)
T5B41a
T5B41b (600x300)
T5B41c (600x300)
T5B41d (600x300)
T5B41e (600x300)
T5B41f (600x300)
T5B41g (600x300)
T5B41h (600x300)
T5B41i (600x300)
T5B41j (600x300)
T5B41k (600x300)
T5B41l (600x300)
T5B41m (600x300)
T5B41n (600x300)
T5B41p (600x300)
T5B41q (600x300)
T5B41r (600x300)
T5B41s (600x300)
T5B41t (600x300)
T5B41u (600x300)
T5B41v (600x300)
T5B41w (600x300)
T5B41x (600x300)
T5B41y (600x300)
T5B41z (600x300)
T5B41aa (600x300)
T5B41ab (600x300)
T5B41ac (600x300)
T5B41ad (600x300)
T5B41ae (600x300)
T5B41af (600x300)
T5B41ag (600x300)
T5B41ah (600x300)
T5B41ai (600x300)
T5B41aj (600x300)
T5B41ak (600x300)
T5B41al (600x300)
T5B41am (600x300)
T5B41an (600x300)
T5B41ap (600x300)
T5B41aq (600x300)
T5B41ar (600x300)
T5B41as (600x300)
T5B41at (600x300)
T5B41au (600x300)
T5B41av (600x300)
T5B41aw (600x300)
T5B41ax (600x300)
T5B41ay (600x300)
T5B41az (600x300)
T5B41ba (600x300)
T5B41bb (600x300)
T5B41bc (600x300)
T5B41bd (600x300)
T5B41be (600x300)
T5B41bf (600x300)
T5B41bg (600x300)
T5B41bh (600x300)
T5B41bi (600x300)
T5B41bj (600x300)
T5B41bk (600x300)
T5B41bl (600x300)
T5B41bm (600x300)
T5B41bn (600x300)
T5B41bp (600x300)
T5B41bq (600x300)
T5B41br (600x300)
T5B41bs (600x300)
T5B41bt (600x300)
T5B41bu (600x300)
T5B41bv (600x300)
T5B41bw (600x300)
T5B41bx (600x300)
T5B41by (600x300)
T5B41bz (600x300)
T5B41ca (600x300)
T5B41cb (600x300)
T5B41cc (600x300)
T5B41cd (600x300)
T5B41ce (600x300)
T5B41cf (600x300)
T5B41cg (600x300)
T5B41ch (600x300)
T5B41ci (600x300)
T5B41cj (600x300)
T5B41ck (600x300)
T5B41cl (600x300)
T5B41cm (600x300)
T5B41cn (600x300)
T5B41cp (600x300)
T5B41cq (600x300)
T5B41cr (600x300)
T5B41cs (600x300)
T5B41ct (600x300)
T5B41cu (600x300)
T5B41cv (600x300)
T5B41cw (600x300)
T5B41cx (600x300)
T5B41cy (600x300)
T5B41cz (600x300)
T5B41da (600x300)
T5B41db (600x300)
T5B41dc (600x300)
T5B41dd (600x300)
T5B41de (600x300)
T5B41df (600x300)
T5B41dg (600x300)
T5B41dh (600x300)
T5B41di (600x300)
T5B41dj (600x300)
T5B41dk (600x300)
T5B41dl (600x300)
T5B41dm (600x300)
T5B41dn (600x300)
T5B41dp (600x300)
T5B41dq (600x300)
T5B41dr (600x300)
T5B41ds (600x300)
T5B41dt (600x300)
T5B41du (600x300)
T5B41dv (600x300)
T5B41dw (600x300)
T5B41dx (600x300)
T5B41dy (600x300)
T5B41dz (600x300)
T5B41ea (600x300)
T5B41eb (600x300)
T5B41ec (600x300)
T5B41ed (600x300)
T5B41ee (600x300)
T5B41ef (600x300)
T5B41eg (600x300)
T5B41eh (600x300)
T5B41ei (600x300)
T5B41ej (600x300)
T5B41ek (600x300)
T5B41el (600x300)
T5B41em (600x300)
T5B41en (600x300)
T5B41ep (600x300)
T5B41eq (600x300)
T5B41er (600x300)
T5B41es (600x300)
T5B41et (600x300)
T5B41eu (600x300)
T5B41ev (600x300)
T5B41ew (600x300)
T5B41ex (600x300)
T5B41ey (600x300)
T5B41ez (600x300)
T5B41fa (600x300)
T5B41fb (600x300)
T5B41fc (600x300)
T5B41fd (600x300)
T5B41fe (600x300)
T5B41ff (600x300)
T5B41fg (600x300)
T5B41fh (600x300)
T5B41fi (600x300)
T5B41fj (600x300)
T5B41fk (600x300)
T5B41fl (600x300)
T5B41fm (600x300)
T5B41fn (600x300)
T5B41fp (600x300)
T5B41fq (600x300)
T5B41fr (600x300)
T5B41fs (600x300)
T5B41ft (600x300)
T5B41fu (600x300)
T5B41fv (600x300)
T5B41fw (600x300)
T5B41fx (600x300)
T5B41fy (600x300)
T5B41fz (600x300)
T5B41ga (600x300)
T5B41gb (600x300)
T5B41gc (600x300)
T5B41gd (600x300)
T5B41ge (600x300)
T5B41gf (600x300)
T5B41gg (600x300)
T5B41gh (600x300)
T5B41gi (600x300)
T5B41gj (600x300)
T5B41gk (600x300)
T5B41gl (600x300)
T5B41gm (600x300)
T5B41gn (600x300)
T5B41gp (600x300)
T5B41gq (600x300)
T5B41gr (600x300)
T5B41gs (600x300)
T5B41gt (600x300)
T5B41gu (600x300)
T5B41gv (600x300)
T5B41gw (600x300)
T5B41gx (600x300)
T5B41gy (600x300)
T5B41gz (600x300)
T5B41ha (600x300)
T5B41hb (600x300)
T5B41hc (600x300)
T5B41hd (600x300)
T5B41he (600x300)
T5B41hf (600x300)
T5B41hg (600x300)
T5B41hh (600x300)
T5B41hi (600x300)
T5B41hj (600x300)
T5B41hk (600x300)
T5B41hl (600x300)
T5B41hm (600x300)
T5B41hn (600x300)
T5B41hp (600x300)
T5B41hq (600x300)
T5B41hr (600x300)
T5B41hs (600x300)
T5B41ht (600x300)
T5B41hu (600x300)
T5B41hv (600x300)
T5B41hw (600x300)
T5B41hx (600x300)
T5B41hy (600x300)
T5B41hz (600x300)
T5B41ia (600x300)
T5B41ib (600x300)
T5B41ic (600x300)
T5B41id (600x300)
T5B41ie (600x300)
T5B41if (600x300)
T5B41ig (600x300)
T5B41ih (600x300)
T5B41ii (600x300)
T5B41ij (600x300)
T5B41ik (600x300)
T5B41il (600x300)
T5B41im (600x300)
T5B41in (600x300)
T5B41ip (600x300)
T5B41iq (600x300)
T5B41ir (600x300)
T5B41is (600x300)
T5B41it (600x300)
T5B41iu (600x300)
T5B41iv (600x300)
T5B41iw (600x300)
T5B41ix (600x300)
T5B41iy (600x300)
T5B41iz (600x300)
T5B41ja (600x300)
T5B41jb (600x300)
T5B41jc (600x300)
T5B41jd (600x300)
T5B41je (600x300)
T5B41jf (600x300)
T5B41jg (600x300)
T5B41jh (600x300)
T5B41ji (600x300)
T5B41jj (600x300)
T5B41jk (600x300)
T5B41jl (600x300)
T5B41jm (600x300)
T5B41jn (600x300)
T5B41jp (600x300)
T5B41jq (600x300)
T5B41jr (600x300)
T5B41js (600x300)
T5B41jt (600x300)
T5B41ju (600x300)
T5B41jv (600x300)
T5B41jw (600x300)
T5B41jx (600x300)
T5B41jy (600x300)
T5B41jz (600x300)
T5B41ka (600x300)
T5B41kb (600x300)
T5B41kc (600x300)
T5B41kd (600x300)
T5B41ke (600x300)
T5B41kf (600x300)
T5B41kg (600x300)
T5B41kh (600x300)
T5B41ki (600x300)
T5B41kj (600x300)
T5B41kk (600x300)
T5B41kl (600x300)
T5B41km (600x300)
T5B41kn (600x300)
T5B41kp (600x300)
T5B41kq (600x300)
T5B41kr (600x300)
T5B41ks (600x300)
T5B41kt (600x300)
T5B41ku (600x300)
T5B41kv (600x300)
T5B41kw (600x300)
T5B41kx (600x300)
T5B41ky (600x300)
T5B41kz (600x300)
T5B41la (600x300)
T5B41lb (600x300)
T5B41lc (600x300)
T5B41ld (600x300)
T5B41le (600x300)
T5B41lf (600x300)
T5B41lg (600x300)
T5B41lh (600x300)
T5B41li (600x300)
T5B41lj (600x300)
T5B41lk (600x300)
T5B41ll (600x300)
T5B41lm (600x300)
T5B41ln (600x300)
T5B41lp (600x300)
T5B41lq (600x300)
T5B41lr (600x300)
T5B41ls (600x300)
T5B41lt (600x300)
T5B41lu (600x300)
T5B41lv (600x300)
T5B41lw (600x300)
T5B41lx (600x300)
T5B41ly (600x300)
T5B41lz (600x300)
T5B41ma (600x300)
T5B41mb (600x300)
T5B41mc (600x300)
T5B41md (600x300)
T5B41me (600x300)
T5B41mf (600x300)
T5B41mg (600x300)
T5B41mh (600x300)
T5B41mi (600x300)
T5B41mj (600x300)
T5B41mk (600x300)
T5B41ml (600x300)
T5B41mm (600x300)
T5B41mn (600x300)
T5B41mp (600x300)
T5B41mq (600x300)
T5B41mr (600x300)
T5B41ms (600x300)
T5B41mt (600x300)
T5B41mu (600x300)
T5B41mv (600x300)
T5B41mw (600x300)
T5B41mx (600x300)
T5B41my (600x300)
T5B41mz (600x300)
T5B41na (600x300)
T5B41nb (600x300)
T5B41nc (600x300)
T5B41nd (600x300)
T5B41ne (600x300)
T5B41nf (600x300)
T5B41ng (600x300)
T5B41nh (600x300)
T5B41ni (600x300)
T5B41nj (600x300)
T5B41nk (600x300)
T5B41nl (600x300)
T5B41nm (600x300)
T5B41nn (600x300)
T5B41np (600x300)
T5B41nq (600x300)
T5B41nr (600x300)
T5B41ns (600x300)
T5B41nt (600x300)
T5B41nu (600x300)
T5B41nv (600x300)
T5B41nw (600x300)
T5B41nx (600x300)
T5B41ny (600x300)
T5B41nz (600x300)
T5B41oa (600x300)
T5B41ob (600x300)
T5B41oc (600x300)
T5B41od (600x300)
T5B41oe (600x300)
T5B41of (600x300)
T5B41og (600x300)
T5B41oh (600x300)
T5B41oi (600x300)
T5B41oj (600x300)
T5B41ok (600x300)
T5B41ol (600x300)
T5B41om (600x300)
T5B41on (600x300)
T5B41op (600x300)
T5B41oq (600x300)
T5B41or (600x300)
T5B41os (600x300)
T5B41ot (600x300)
T5B41ou (600x300)
T5B41ov (600x300)
T5B41ow (600x300)
T5B41ox (600x300)
T5B41oy (600x300)
T5B41oz (600x300)
T5B41pa (600x300)
T5B41pb (600x300)
T5B41pc (600x300)
T5B41pd (600x300)
T5B41pe (600x300)
T5B41pf (600x300)
T5B41pg (600x300)
T5B41ph (600x300)
T5B41pi (600x300)
T5B41pj (600x300)
T5B41pk (600x300)
T5B41pl (600x300)
T5B41pm (600x300)
T5B41pn (600x300)
T5B41pp (600x300)
T5B41pq (600x300)
T5B41pr (600x300)
T5B41ps (600x300)
T5B41pt (600x300)
T5B41pu (600x300)
T5B41pv (600x300)
T5B41pw (600x300)
T5B41px (600x300)
T5B41py (600x300)
T5B41pz (600x300)
T5B41qa (600x300)
T5B41qb (600x300)
T5B41qc (600x300)
T5B41qd (600x300)
T5B41qe (600x300)
T5B41qf (600x300)
T5B41qg (600x300)
T5B41qh (600x300)
T5B41qi (600x300)
T5B41qj (600x300)
T5B41qk (600x300)
T5B41ql (600x300)
T5B41qm (600x300)
T5B41qn (600x300)
T5B41qp (600x300)
T5B41qq (600x300)
T5B41qr (600x300)
T5B41qs (600x300)
T5B41qt (600x300)
T5B41qu (600x300)
T5B41qv (600x300)
T5B41qw (600x300)
T5B41qx (600x300)
T5B41qy (600x300)
T5B41qz (600x300)
T5B41ra (600x300)
T5B41rb (600x300)
T5B41rc (600x300)
T5B41rd (600x300)
T5B41re (600x300)
T5B41rf (600x300)
T5B41rg (600x300)
T5B41rh (600x300)
T5B41ri (600x300)
T5B41rj (600x300)
T5B41rk (600x300)
T5B41rl (600x300)
T5B41rm (600x300)
T5B41rn (600x300)
T5B41rp (600x300)
T5B41rq (600x300)
T5B41rr (600x300)
T5B41rs (600x300)
T5B41rt (600x300)
T5B41ru (600x300)
T5B41rv (600x300)
T5B41rw (600x300)
T5B41rx (600x300)
T5B41ry (600x300)
T5B41rz (600x300)
T5B41sa (600x300)
T5B41sb (600x300)
T5B41sc (600x300)
T5B41sd (600x300)
T5B41se (600x300)
T5B41sf (600x300)
T5B41sg (600x300)
T5B41sh (600x300)
T5B41si (600x300)
T5B41sj (600x300)
T5B41sk (600x300)
T5B41sl (600x300)
T5B41sm (600x300)
T5B41sn (600x300)
T5B41sp (600x300)
T5B41sq (600x300)
T5B41sr (600x300)
T5B41ss (600x300)
T5B41st (600x300)
T5B41su (600x300)
T5B41sv (600x300)
T5B41sw (600x300)
T5B41sx (600x300)
T5B41sy (600x300)
T5B41sz (600x300)
T5B41ta (600x300)
T5B41tb (600x300)
T5B41tc (600x300)
T5B41td (600x300)
T5B41te (600x300)
T5B41tf (600x300)
T5B41tg (600x300)
T5B41th (600x300)
T5B41ti (600x300)
T5B41tj (600x300)
T5B41tk (600x300)
T5B41tl (600x300)
T5B41tm (600x300)
T5B41tn (600x300)
T5B41tp (600x300)
T5B41tq (600x300)
T5B41tr (600x300)
T5B41ts (600x300)
T5B41tt (600x300)
T5B41tu (600x300)
T5B41tv (600x300)
T5B41tw (600x300)
T5B41tx (600x300)
T5B41ty (600x300)
T5B41tz (600x300)
T5B41ua (600x300)
T5B41ub (600x300)
T5B41uc (600x300)
T5B41ud (600x300)
T5B41ue (600x300)
T5B41uf (600x300)
T5B41ug (600x300)
T5B41uh (600x300)
T5B41ui (600x300)
T5B41uj (600x300)
T5B41uk (600x300)
T5B41ul (600x300)
T5B41um (600x300)
T5B41un (600x300)
T5B41up (600x300)
T5B41uq (600x300)
T5B41ur (600x300)
T5B41us (600x300)
T5B41ut (600x300)
T5B41uu (600x300)
T5B41uv (600x300)
T5B41uw (600x300)
T5B41ux (600x300)
T5B41uy (600x300)
T5B41uz (600x300)
T5B41va (600x300)
T5B41vb (600x300)
T5B41vc (600x300)
T5B41vd (600x300)
T5B41ve (600x300)
T5B41vf (600x300)
T5B41vg (600x300)
T5B41vh (600x300)
T5B41vi (600x300)
T5B41vj (600x300)
T5B41vk (600x300)
T5B41vl (600x300)
T5B41vm (600x300)
T5B41vn (600x300)
T5B41vp (600x300)
T5B41vq (600x300)
T5B41vr (600x300)
T5B41vs (600x300)
T5B41vt (600x300)
T5B41vu (600x300)
T5B41vv (600x300)
T5B41vw (600x300)
T5B41vx (600x300)
T5B41vy (600x300)
T5B41vz (600x300)
T5B41wa (600x300)
T5B41wb (600x300)
T5B41wc (600x300)
T5B41wd (600x300)
T5B41we (600x300)
T5B41wf (600x300)
T5B41wg (600x300)
T5B41wh (600x300)
T5B41wi (600x300)
T5B41wj (600x300)
T5B41wk (600x300)
T5B41wl (600x300)
T5B41wm (600x300)
T5B41wn (600x300)
T5B41wp (600x300)
T5B41wq (600x300)
T5B41wr (600x300)
T5B41ws (600x300)
T5B41wt (600x300)
T5B41wu (600x300)
T5B41wv (600x300)
T5B41ww (600x300)
T5B41wx (600x300)
T5B41wy (600x300)
T5B41wz (600x300)
T5B41xa (600x300)
T5B41xb (600x300)
T5B41xc (600x300)
T5B41xd (600x300)
T5B41xe (600x300)
T5B41xf (600x300)
T5B41xg (600x300)
T5B41xh (600x300)
T5B41xi (600x300)
T5B41xj (600x300)
T5B41xk (600x300)
T5B41xl (600x300)
T5B41xm (600x300)
T5B41xn (600x300)
T5B41xp (600x300)
T5B41xq (600x300)
T5B41xr (600x300)
T5B41xs (600x300)
T5B41xt (600x300)
T5B41xu (600x300)
T5B41xv (600x300)
T5B41xw (600x300)
T5B41xx (600x300)
T5B41xy (600x300)
T5B41xz (600x300)
T5B41ya (600x300)
T5B41yb (600x300)
T5B41yc (600x300)
T5B41yd (600x300)
T5B41ye (600x300)
T5B41yf (600x300)
T5B41yg (600x300)
T5B41yh (600x300)
T5B41yi (600x300)
T5B41yj (600x300)
T5B41yk (600x300)
T5B41yl (600x300)
T5B41ym (600x300)
T5B41yn (600x300)
T5B41yp (600x300)
T5B41yq (600x300)
T5B41yr (600x300)
T5B41ys (600x300)
T5B41yt (600x300)
T5B41yu (600x300)
T5B41yv (600x300)
T5B41yw (600x300)
T5B41yx (600x300)
T5B41yy (600x300)
T5B41yz (600x300)
T5B41za (600x300)
T5B41zb (600x300)
T5B41zc (600x300)
T5B41zd (600x300)
T5B41ze (600x300)
T5B41zf (600x300)
T5B41zg (600x300)
T5B41zh (600x300)
T5B41zi (600x300)
T5B41zj (600x300)
T5B41zk (600x300)
T5B41zl (600x300)
T5B41zm (600x300)
T5B41zn (600x300)
T5B41zp (600x300)
T5B41zq (600x300)
T5B41zr (600x300)
T5B41zs (600x300)
T5B41zt (600x300)
T5B41zu (600x300)
T5B41zv (600x300)
T5B41zw (600x300)
T5B41zx (600x300)
T5B41zy (600x300)
T5B41zz (600x300)
T5B42a (600x300)
T5B42b (600x300)
T5B42c (600x300)
T5B42d (600x300)
T5B42e (600x300)
T5B42f (600x300)
T5B42g (600x300)
T5B42h (600x300)
T5B42i (600x300)
T5B42j (600x300)
T5B42k (600x300)
T5B42l (600x300)
T5B42m (600x300)
T5B42n (600x300)
T5B42p (600x300)
T5B42q (600x300)
T5B42r (600x300)
T5B42s (600x300)
T5B42t (600x300)
T5B42u (600x300)
T5B42v (600x300)
T5B42w (600x300)
T5B42x (600x300)
T5B42y (600x300)
T5B42z (600x300)
T5B42aa (600x300)
T5B42ab (600x300)
T5B42ac (600x300)
T5B42ad (600x300)
T5B42ae (600x300)
T5B42af (600x300)
T5B42ag (600x300)
T5B42ah (600x300)
T5B42ai (600x300)
T5B42aj (600x300)
T5B42ak (600x300)
T5B42al (600x300)
T5B42am (600x300)
T5B42an (600x300)
T5B42ap (600x300)
T5B42aq (600x300)
T5B42ar (600x300)
T5B42as (600x300)
T5B42at (600x300)
T5B42au (600x300)
T5B42av (600x300)
T5B42aw (600x300)
T5B42ax (600x300)
T5B42ay (600x300)
T5B42az (600x300)
T5B42ba (600x300)
T5B42bb (600x300)
T5B42bc (600x300)
T5B42bd (600x300)
T5B42be (600x300)
T5B42bf (600x300)
T5B42bg (600x300)
T5B42bh (600x300)
T5B42bi (600x300)
T5B42bj (600x300)
T5B42bk (600x300)
T5B42bl (600x300)
T5B42bm (600x300)
T5B42bn (600x300)
T5B42bp (600x300)
T5B42bq (600x300)
T5B42br (600x300)
T5B42bs (600x300)
T5B42bt (600x300)
T5B42bu (600x300)
T5B42bv (600x300)
T5B42bw (600x300)
T5B42bx (600x300)
T5B42by (600x300)
T5B42bz (600x300)
T5B42ca (600x300)
T5B42cb (600x300)
T5B42cc (600x300)
T5B42cd (600x300)
T5B42ce (600x300)
T5B42cf (600x300)
T5B42cg (600x300)
T5B42ch (600x300)
T5B42ci (600x300)
T5B42cj (600x300)
T5B42ck (600x300)
T5B42cl (600x300)
T5B42cm (600x300)
T5B42cn (600x300)
T5B42cp (600x300)
T5B42cq (600x300)
T5B42cr (600x300)
T5B42cs (600x300)
T5B42ct (600x300)
T5B42cu (600x300)
T5B42cv (600x300)
T5B42cw (600x300)
T5B42cx (600x300)
T5B42cy (600x300)
T5B42cz (600x300)
T5B42da (600x300)
T5B42db (600x300)
T5B42dc (600x300)
T5B42dd (600x300)
T5B42de (600x300)
T5B42df (600x300)
T5B42dg (600x300)
T5B42dh (600x300)
T5B42di (600x300)
T5B42dj (600x300)
T5B42dk (600x300)
T5B42dl (600x300)
T5B42dm (600x300)
T5B42dn (600x300)
T5B42dp (600x300)
T5B42dq (600x300)
T5B42dr (600x300)
T5B42ds (600x300)
T5B42dt (600x300)
T5B42du (600x300)
T5B42dv (600x300)
T5B42dw (600x300)
T5B42dx (600x300)
T5B42dy (600x300)
T5B42dz (600x300)
T5B42ea (600x300)
T5B42eb (600x300)
T5B42ec (600x300)
T5B42ed (600x300)
T5B42ee (600x300)
T5B42ef (600x300)
T5B42eg (600x300)
T5B42eh (600x300)
T5B42ei (600x300)
T5B42ej (600x300)
T5B42ek (600x300)
T5B42el (600x300)
T5B42em (600x300)
T5B42en (600x300)
T5B42ep (600x300)
T5B42eq (600x300)
T5B42er (600x300)
T5B42es (600x300)
T5B42et (600x300)
T5B42eu (600x300)
T5B42ev (600x300)
T5B42ew (600x300)
T5B42ex (600x300)
T5B42ey (600x300)
T5B42ez (600x300)
T5B42fa (600x300)
T5B42fb (600x300)
T5B42fc (600x300)
T5B42fd (600x300)
T5B42fe (600x300)
T5B42ff (600x300)
T5B42fg (600x300)
T5B42fh (600x300)
T5B42fi (600x300)
T5B42fj (600x300)
T5B42fk (600x300)
T5B42fl (600x300)
T5B42fm (600x300)
T5B42fn (600x300)
T5B42fp (600x300)
T5B42fq (600x300)
T5B42fr (600x300)
T5B42fs (600x300)
T5B42ft (600x300)
T5B42fu (600x300)
T5B42fv (600x300)
T5B42fw (600x300)
T5B42fx (600x300)
T5B42fy (600x300)
T5B42fz (600x300)
T5B42ga (600x300)
T5B42gb (600x300)
T5B42gc (600x300)
T5B42gd (600x300)
T5B42ge (600x300)
T5B42gf (600x300)
T5B42gg (600x300)
T5B42gh (600x300)
T5B42gi (600x300)
T5B42gj (600x300)
T5B42gk (600x300)
T5B42gl (600x300)
T5B42gm (600x300)
T5B42gn (600x300)
T5B42gp (600x300)
T5B42gq (600x300)
T5B42gr (600x300)
T5B42gs (600x300)
T5B42gt (600x300)
T5B42gu (600x300)
T5B42gv (600x300)
T5B42gw (600x300)
T5B42gx (600x300)
T5B42gy (600x300)
T5B42gz (600x300)
T5B42ha (600x300)
T5B42hb (600x300)
T5B42hc (600x300)
T5B42hd (600x300)
T5B42he (600x300)
T5B42hf (600x300)
T5B42hg (600x300)
T5B42hh (600x300)
T5B42hi (600x300)
T5B42hj (600x300)
T5B42hk (600x300)
T5B42hl (600x300)
T5B42hm (600x300)
T5B42hn (600x300)
T5B42hp (600x300)
T5B42hq (600x300)
T5B42hr (600x300)
T5B42hs (600x300)
T5B42ht (600x300)
T5B42hu (600x300)
T5B42hv (600x300)
T5B42hw (600x300)
T5B42hx (600x300)
T5B42hy (600x300)
T5B42hz (600x300)
T5B42ia (600x300)
T5B42ib (600x300)
T5B42ic (600x300)
T5B42id (600x300)
T5B42ie (600x300)
T5B42if (600x300)
T5B42ig (600x300)
T5B42ih (600x300)
T5B42ii (600x300)
T5B42ij (600x300)
T5B42ik (600x300)
T5B42il (600x300)
T5B42im (600x300)
T5B42in (600x300)
T5B42ip (600x300)
T5B42iq (600x300)
T5B42ir (600x300)
T5B42is (600x300)
T5B42it (600x300)
T5B42iu (600x300)
T5B42iv (600x300)
T5B42iw (600x300)
T5B42ix (600x300)
T5B42iy (600x300)
T5B42iz (600x300)
T5B42ja (600x300)
T5B42jb (600x300)
T5B42jc (600x300)
T5B42jd (600x300)
T5B42je (600x300)
T5B42jf (600x300)
T5B42jg (600x300)
T5B42jh (600x300)
T5B42ji (600x300)
T5B42jj (600x300)
T5B42jk (600x300)
T5B42jl (600x300)
T5B42jm (600x300)
T5B42jn (600x300)
T5B42jp (600x300)
T5B42jq (600x300)
T5B42jr (600x300)
T5B42js (600x300)
T5B42jt (600x300)
T5B42ju (600x300)
T5B42jv (600x300)
T5B42jw (600x300)
T5B42jx (600x300)
T5B42jy (600x300)
T5B42jz (600x300)
T5B42ka (600x300)
T5B42kb (600x300)
T5B42kc (600x300)
T5B42kd (600x300)
T5B42ke (600x300)
T5B42kf (600x300)
T5B42kg (600x300)
T5B42kh (600x300)
T5B42ki (600x300)
T5B42kj (600x300)
T5B42kk (600x300)
T5B42kl (600x300)
T5B42km (600x300)
T5B42kn (600x300)
T5B42kp (600x300)
T5B42kq (600x300)
T5B42kr (600x300)
T5B42ks (600x300)
T5B42kt (600x300)
T5B42ku (600x300)
T5B42kv (600x300)
T5B42kw (600x300)
T5B42kx (600x300)
T5B42ky (600x300)
T5B42kz (600x300)
T5B42la (600x300)
T5B42lb (600x300)
T5B42lc (600x300)
T5B42ld (600x300)
T5B42le (600x300)
T5B42lf (600x300)
T5B42lg (600x300)
T5B42lh (600x300)
T5B42li (600x300)
T5B42lj (600x300)
T5B42lk (600x300)
T5B42ll (600x300)
T5B42lm (600x300)
T5B42ln (600x300)
T5B42lp (600x300)
T5B42lq (600x300)
T5B42lr (600x300)
T5B42ls (600x300)
T5B42lt (600x300)
T5B42lu (600x300)
T5B42lv (600x300)
T5B42lw (600x300)
T5B42lx (600x300)
T5B42ly (600x300)
T5B42lz (600x300)
T5B42ma (600x300)
T5B42mb (600x300)
T5B42mc (600x300)
T5B42md (600x300)
T5B42me (600x300)
T5B42mf (600x300)
T5B42mg (600x300)
T5B42mh (600x300)
T5B42mi (600x300)
T5B42mj (600x300)
T5B42mk (600x300)
T5B42ml (600x300)
T5B42mm (600x300)
T5B42mn (600x300)
T5B42mp (600x300)
T5B42mq (600x300)
T5B42mr (600x300)
T5B42ms (600x300)
T5B42mt (600x300)
T5B42mu (600x300)
T5B42mv (600x300)
T5B42mw (600x300)
T5B42mx (600x300)
T5B42my (600x300)
T5B42mz (600x300)
T5B42na (600x300)
T5B42nb (600x300)
T5B42nc (600x300)
T5B42nd (600x300)
T5B42ne (600x300)
T5B42nf (600x300)
T5B42ng (600x300)
T5B42nh (600x300)
T5B42ni (600x300)
T5B42nj (600x300)
T5B42nk (600x300)
T5B42nl (600x300)
T5B42nm (600x300)
T5B42nn (600x300)
T5B42np (600x300)
T5B42nq (600x300)
T5B42nr (600x300)
T5B42ns (600x300)
T5B42nt (600x300)
T5B42nu (600x300)
T5B42nv (600x300)
T5B42nw (600x300)
T5B42nx (600x300)
T5B42ny (600x300)
T5B42nz (600x300)
T5B42oa (600x300)
T5B42ob (600x300)
T5B42oc (600x300)
T5B42od (600x300)
T5B42oe (600x300)
T5B42of (600x300)
T5B42og (600x300)
T5B42oh (600x300)
T5B42oi (600x300)
T5B42oj (600x300)
T5B42ok (600x300)
T5B42ol (600x300)
T5B42om (600x300)
T5B42on (600x300)
T5B42op (600x300)
T5B42oq (600x300)
T5B42or (600x300)
T5B42os (600x300)
T5B42ot (600x300)
T5B42ou (600x300)
T5B42ov (600x300)
T5B42ow (600x300)
T5B42ox (600x300)
T5B42oy (600x300)
T5B42oz (600x300)
T5B42pa (600x300)
T5B42pb (600x300)
T5B42pc (600x300)
T5B42pd (600x300)
T5B42pe (600x300)
T5B42pf (600x300)
T5B42pg (600x300)
T5B42ph (600x300)
T5B42pi (600x300)
T5B42pj (600x300)
T5B42pk (600x300)
T5B42pl (600x300)
T5B42pm (600x300)
T5B42pn (600x300)
T5B42pp (600x300)
T5B42pq (600x300)
T5B42pr (600x300)
T5B42ps (600x300)
T5B42pt (600x300)
T5B42pu (600x300)
T5B42pv (600x300)
T5B42pw (600x300)
T5B42px (600x300)
T5B42py (600x300)
T5B42pz (600x300)
T5B42qa (600x300)
T5B42qb (600x300)
T5B42qc (600x300)
T5B42qd (600x300)
T5B42qe (600x300)
T5B42qf (600x300)
T5B42qg (600x300)
T5B42qh (600x300)
T5B42qi (600x300)
T5B42qj (600x300)
T5B42qk (600x300)
T5B42ql (600x300)
T5B42qm (600x300)
T5B42qn (600x300)
T5B42qp (600x300)
T5B42qq (600x300)
T5B42qr (600x300)
T5B42qs (600x300)
T5B42qt (600x300)
T5B42qu (600x300)
T5B42qv (600x300)
T5B42qw (600x300)
T5B42qx (600x300)
T5B42qy (600x300)
T5B42qz (600x300)
T5B42ra (600x300)
T5B42rb (600x300)
T5B42rc (600x300)
T5B42rd (600x300)
T5B42re (600x300)
T5B42rf (600x300)
T5B42rg (600x300)
T5B42rh (600x300)
T5B42ri (600x300)
T5B42rj (600x300)
T5B42rk (600x300)
T5B42rl (600x300)
T5B42rm (600x300)
T5B42rn (600x300)
T5B42rp (600x300)
T5B42rq (600x300)
T5B42rr (600x300)
T5B42rs (600x300)
T5B42rt (600x300)
T5B42ru (600x300)
T5B42rv (600x300)
T5B42rw (600x300)
T5B42rx (600x300)
T5B42ry (600x300)
T5B42rz (600x300)
T5B42sa (600x300)
T5B42sb (600x300)
T5B42sc (600x300)
T5B42sd (600x300)
T5B42se (600x300)
T5B42sf (600x300)
T5B42sg (600x300)
T5B42sh (600x300)
T5B42si (600x300)
T5B42sj (600x300)
T5B42sk (600x300)
T5B42sl (600x300)
T5B42sm (600x300)
T5B42sn (600x300)
T5B42sp (600x300)
T5B42sq (600x300)
T5B42sr (600x300)
T5B42ss (600x300)
T5B42st (600x300)
T5B42su (600x300)
T5B42sv (600x300)
T5B42sw (600x300)
T5B42sx (600x300)
T5B42sy (600x300)
T5B42sz (600x300)
T5B42ta (600x300)
T5B42tb (600x300)
T5B42tc (600x300)
T5B42td (600x300)
T5B42te (600x300)
T5B42tf (600x300)
T5B42tg (600x300)
T5B42th (600x300)
T5B42ti (600x300)
T5B42tj (600x300)
T5B42tk (600x300)
T5B42tl (600x300)
T5B42tm (600x300)
T5B42tn (600x300)
T5B42tp (600x300)
T5B42tq (600x300)
T5B42tr (600x300)
T5B42ts (600x300)
T5B42tt (600x300)
T5B42tu (600x300)
T5B42tv (600x300)
T5B42tw (600x300)
T5B42tx (600x300)
T5B42ty (600x300)
T5B42tz (600x300)
T5B42ua (600x300)
T5B42ub (600x300)
T5B42uc (600x300)
T5B42ud (600x300)
T5B42ue (600x300)
T5B42uf (600x300)
T5B42ug (600x300)
T5B42uh (600x300)
T5B42ui (600x300)
T5B42uj (600x300)
T5B42uk (600x300)
T5B42ul (600x300)
T5B42um (600x300)
T5B42un (600x300)
T5B42up (600x300)
T5B42uq (600x300)
T5B42ur (600x300)
T5B42us (600x300)
T5B42ut (600x300)
T5B42uu (600x300)
T5B42uv (600x300)
T5B42uw (600x300)
T5B42ux (600x300)
T5B42uy (600x300)
T5B42uz (600x300)
T5B42va (600x300)
T5B42vb (600x300)
T5B42vc (600x300)
T5B42vd (600x300)
T5B42ve (600x300)
T5B42vf (600x300)
T5B42vg (600x300)
T5B42vh (600x300)
T5B42vi (600x300)
T5B42vj (600x300)
T5B42vk (600x300)
T5B42vl (600x300)
T5B42vm (600x300)
T5B42vn (600x300)
T5B42vp (600x300)
T5B42vq (600x300)
T5B42vr (600x300)
T5B42vs (600x300)
T5B42vt (600x300)
T5B42vu (600x300)
T5B42vv (600x300)
T5B42vw (600x300)
T5B42vx (600x300)
T5B42vy (600x300)
T5B42vz (600x300)
T5B42wa (600x300)
T5B42wb (600x300)
T5B42wc (600x300)
T5B42wd (600x300)
T5B42we (600x300)
T5B42wf (600x300)
T5B42wg (600x300)
T5B42wh (600x300)
T5B42wi (600x300)
T5B42wj (600x300)
T5B42wk (600x300)
T5B42wl (600x300)
T5B42wm (600x300)
T5B42wn (600x300)
T5B42wp (600x300)
T5B42wq (600x300)
T5B42wr (600x300)
T5B42ws (600x300)
T5B42wt (600x300)
T5B42wu (600x300)
T5B42wv (600x300)
T5B42ww (600x300)
T5B42wx (600x300)
T5B42wy (600x300)
T5B42wz (600x300)
T5B42xa (600x300)
T5B42xb (600x300)
T5B42xc (600x300)
T5B42xd (600x300)
T5B42xe (600x300)
T5B42xf (600x300)
T5B42xg (600x300)
T5B42xh (600x300)
T5B42xi (600x300)
T5B42xj (600x300)
T5B42xk (600x300)
T5B42xl (600x300)
T5B42xm (600x300)
T5B42xn (600x300)
T5B42xp (600x300)
T5B42xq (600x300)
T5B42xr (600x300)
T5B42xs (600x300)
T5B42xt (600x300)
T5B42xu (600x300)
T5B42xv (600x300)
T5B42xw (600x300)
T5B42xx (600x300)
T5B42xy (600x300)
T5B42xz (600x300)
T5B42ya (600x300)
T5B42yb (600x300)
T5B42yc (600x300)
T5B42yd (600x300)
T5B42ye (600x300)
T5B42yf (600x300)
T5B42yg (600x300)
T5B42yh (600x300)
T5B42

LEGEND :

- E01 = HILIT , HAC-70 CAST IN CHANNEL
- E02 = HILIT , HAC-50 CAST IN CHANNEL
- E03 = GAL. MILD STEEL CAST IN EMBED
- E04 = CAST-IN HOLDING DOWN BOLT
- E05 = CAST-IN HOLDING DOWN BOLT

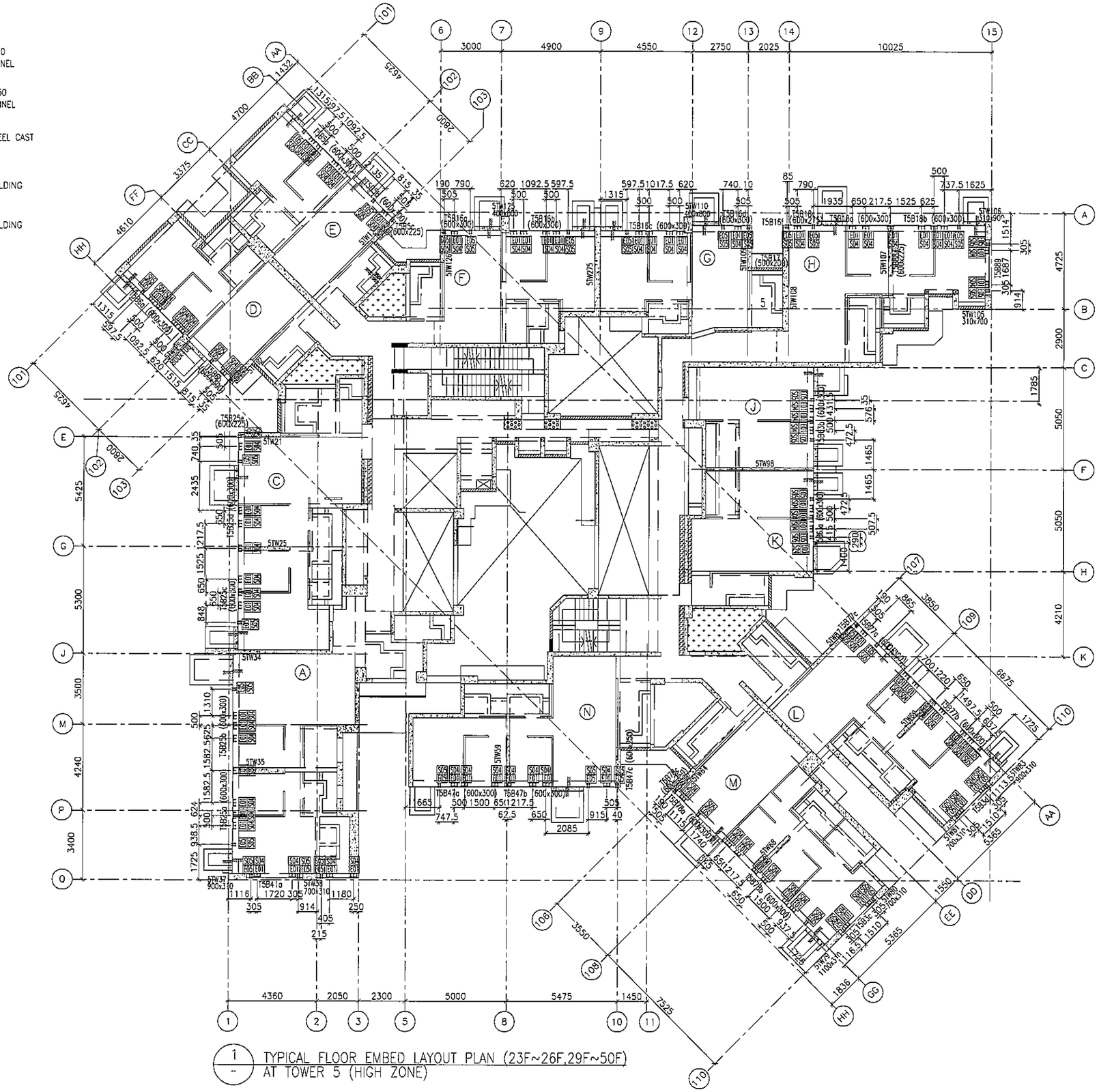

1/- TYPICAL FLOOR EMBED LAYOUT PLAN (23F~26F,29F~50F) AT TOWER 5 (HIGH ZONE)

FLOOR LEVEL (S.F.L.)(TS)

FLOOR NUMBERING	LEVEL (mPD)
23F	86.500
25F	89.650
26F	92.800
29F	102.250
30F	105.400
31F	108.550
32F	111.700
33F	114.850
35F	118.000
36F	121.150
37F	124.300
38F	127.450
39F	130.600
40F	133.750
41F	136.900
42F	140.050
43F	143.100
45F	146.350
46F	149.500
47F	152.650
48F	155.800
49F	158.950
50F	162.100

B.D. REF :

CLIENT : 信和置業有限公司 Sino Land Company Limited

ARCHITECT : WONG TUNG & PARTNERS LIMITED ARCHITECTS & PLANNERS

MAIN CONTRACTOR : CR Construction Company Limited

STRUCTURAL ENGINEER : AECOM

FACADE CONSULTANT: AECOM

NOTE :
1. ALL DIMENSIONS ARE IN mm.
2. ALL ELEVATIONS ARE VIEWED FROM OUTSIDE.
3. ALL DIMENSIONS TO BE VERIFIED ON SITE BEFORE FABRICATION.

LEGEND :
- X1 / X001 — DETAIL MARK NO. / REFER SHEET NO.
1. F.F.L. --FINISHED FLOOR LEVEL
2. S.F.L. --STRUCTURAL FLOOR LEVEL
3. (/R) --REVERSED DETAIL

NO.	DATE	REVISED	BY
F	19/01/2019	GENERAL REVISED	
E	22/12/2018	GENERAL REVISED	
D	08/11/2018	GENERAL REVISED	
C	11/10/2018	GENERAL REVISED	
B	8/10/2018	GENERAL REVISED	
A	14/9/2018	GENERAL REVISED	

JOB NO. : J-837

PROJECT : URA KWUN TONG TOWN CENTRE REDEVELOPMENT (AREA 2 & 3) AT NKIL 6514, KWUN TONG, KWLOON

TITLE : TYPICAL FLOOR EMBED LAYOUT PLAN (22F~26F,28F~50F) OF CURTAIN WALL AT TOWER 5

DATE : 10-SEP-18 | SCALE : 1:100 (A1)

DRAWN BY : ASING | CHECKED BY : -

美特鋁質有限公司 MIDI ALUMINIUM FABRICATOR LTD.
Units 6-8, Sunray Industrial Centre, 1/F
610 Cha Kwo Ling Road, Kowloon
Tel:23489211-4 Fax:(852)27727655

DWG NO. : J837-CW-1504 | REV. : F

LEGEND :

- E01 = HILIT , HAC-70 CAST IN CHANNEL
- E02 = HILIT , HAC-50 CAST IN CHANNEL
- E03 = GAL. MILD STEEL CAST IN EMBED
- E04 = CAST-IN HOLDING DOWN BOLT
- E05 = CAST-IN HOLDING DOWN BOLT
- E06 = CAST-IN HOLDING DOWN BOLT
- E07 = CAST-IN HOLDING DOWN BOLT

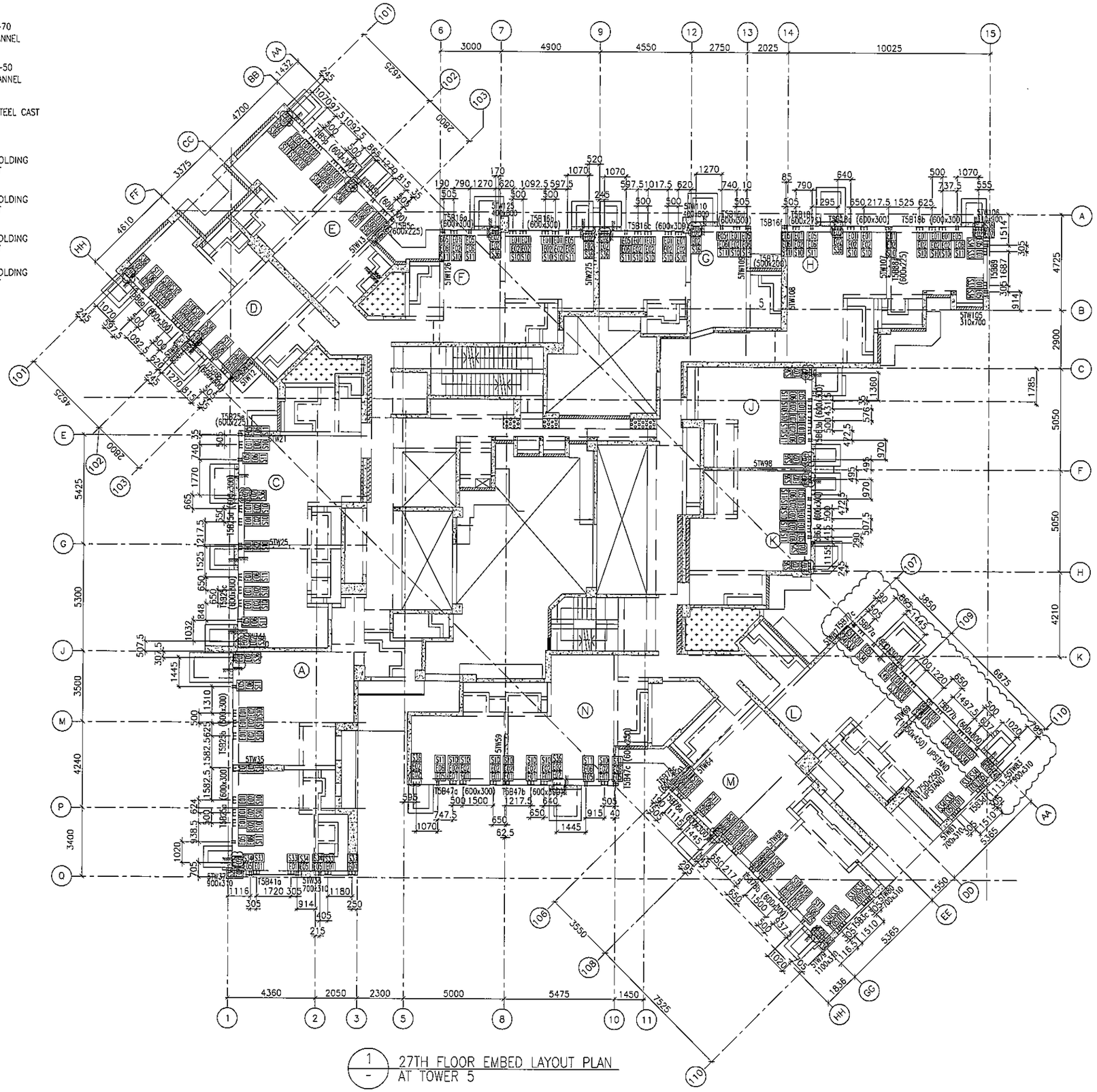

1 / - 27TH FLOOR EMBED LAYOUT PLAN AT TOWER 5

FLOOR LEVEL (S.F.L.)(T5)

FLOOR NUMBERING	LEVEL (mPD)
27F	+95.95

B.D. REF :

CLIENT : 信和置業有限公司 Sino Land Company Limited

ARCHITECT : WONG TUNG & PARTNERS LIMITED ARCHITECTS & PLANNERS

MAIN CONTRACTOR : CR Construction Company Limited

STRUCTURAL ENGINEER : AECOM

FACADE CONSULTANT: AECOM

NOTE :
1. ALL DIMENSIONS ARE IN mm.
2. ALL ELEVATIONS ARE VIEWED FROM OUTSIDE.
3. ALL DIMENSIONS TO BE VERIFIED ON SITE BEFORE FABRICATION.

LEGEND :
- X1 / X001 — DETAIL MARK NO. / REFER SHEET NO.
1. F.F.L. --FINISHED FLOOR LEVEL
2. S.F.L. --STRUCTURAL FLOOR LEVEL
3. /R --REVERSED DETAIL

NO.	DATE	REMARKS	BY
H	18/08/2019	GENERAL REVISED	
G	21/02/2019	GENERAL REVISED	
F	19/01/2019	GENERAL REVISED	
E	22/12/2018	GENERAL REVISED	
D	08/11/2018	GENERAL REVISED	
C	11/10/2018	GENERAL REVISED	
B	8/10/2018	GENERAL REVISED	
A	14/9/2018	GENERAL REVISED	

JOB NO. : J-837

PROJECT : URA KWUN TONG TOWN CENTRE REDEVELOPMENT (AREA 2 & 3) AT NKIL 6514, KWUN TONG, KWLOON

TITLE : 27TH FLOOR EMBED LAYOUT PLAN OF CURTAIN WALL AT TOWER 5

DATE : 10-SEP-18 | SCALE : 1:100 (A1)

DRAWN BY : ASING | CHECKED BY : -

美特鋁質有限公司 MIDI ALUMINIUM FABRICATOR LTD.
Units 6-8, Sunray Industrial Centre, 1/F
610 Cha Kwo Ling Road, Kowloon
Tel:23489211-4 Fax:(852)27727686

DWG NO. : J837-CW-1505 | REV. : H

LEGEND :

- E01 = HILIT , HAC-70 CAST IN CHANNEL
- E02 = HILIT , HAC-50 CAST IN CHANNEL
- E03 = GAL. MILD STEEL CAST IN EMBED
- E04 = CAST-IN HOLDING DOWN BOLT
- E05 = CAST-IN HOLDING DOWN BOLT

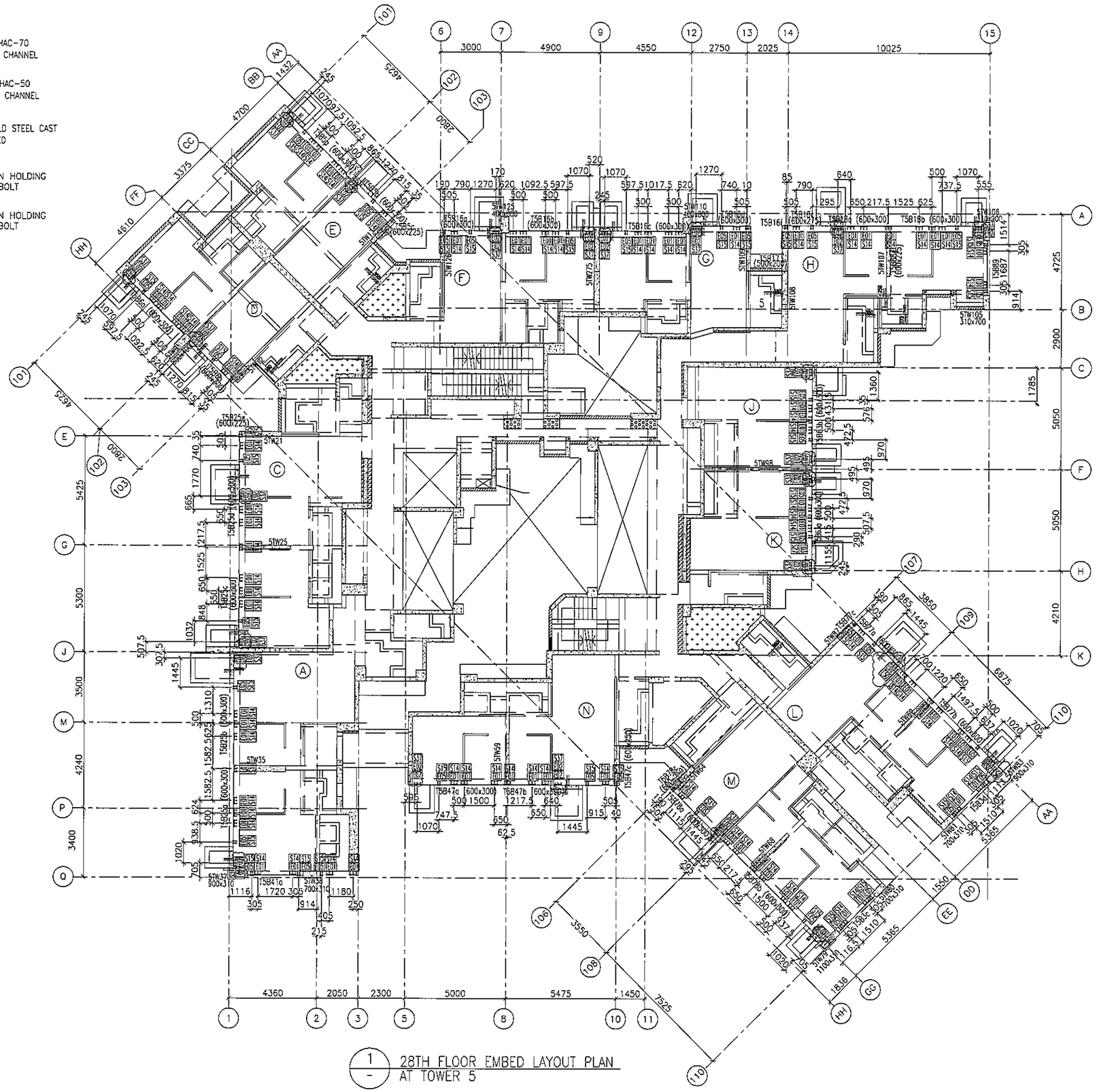

1 / - 28TH FLOOR EMBED LAYOUT PLAN AT TOWER 5

FLOOR LEVEL (S.F.L.)(TS)

FLOOR NUMBERING	LEVEL (mPD)
28F	+99.100

B.D. REF :

CLIENT : 信和置業有限公司 Sino Land Company Limited

ARCHITECT : WONG TUNG & PARTNERS LIMITED ARCHITECTS & PLANNERS

MAIN CONTRACTOR : CR Construction Company Limited

STRUCTURAL ENGINEER : AECOM

FACADE CONSULTANT: AECOM

NOTE :
1. ALL DIMENSIONS ARE IN mm.
2. ALL ELEVATIONS ARE VIEWED FROM OUTSIDE.
3. ALL DIMENSIONS TO BE VERIFIED ON SITE BEFORE FABRICATION.

LEGEND :
- X1 / X001 — DETAIL MARK NO. / REFER SHEET NO.
1. F.F.L. --FINISHED FLOOR LEVEL
2. S.F.L. --STRUCTURAL FLOOR LEVEL
3. (VR) --REVERSED DETAIL

NO.	DATE	REVISED	BY
H	18/08/2019	GENERAL REVISED	
G	21/02/2019	GENERAL REVISED	
F	19/01/2019	GENERAL REVISED	
E	22/12/2018	GENERAL REVISED	
D	08/11/2018	GENERAL REVISED	
C	11/10/2018	GENERAL REVISED	
B	8/10/2018	GENERAL REVISED	
A	14/9/2018	GENERAL REVISED	

JOB NO. : J-837

PROJECT : URA KWUN TONG TOWN CENTRE REDEVELOPMENT (AREA 2 & 3) AT NKIL 6514, KWUN TONG, KWLOON

TITLE : 28TH FLOOR EMBED LAYOUT PLAN OF CURTAIN WALL AT TOWER 5

DATE : 10-SEP-18 | SCALE : 1:100 (A1)

DRAWN BY : ASING | CHECKED BY : -

美特鋁質有限公司 MIDI ALUMINIUM FABRICATOR LTD.
Units 6-8, Sunray Industrial Centre, 1/F
610 Cha Kwo Ling Road, Kowloon
Tel:23489211-4 Fax:(852)27727666

DWG NO. : J837-CW-1506 | REV. : H

LEGEND :

EO1 = HILIT , HAC-70 CAST IN CHANNEL

EO2 = HILIT , HAC-50 CAST IN CHANNEL

EO3 = GAL. MILD STEEL CAST IN EMBED

EO4 = CAST-IN HOLDING DOWN BOLT

EO5 = CAST-IN HOLDING DOWN BOLT

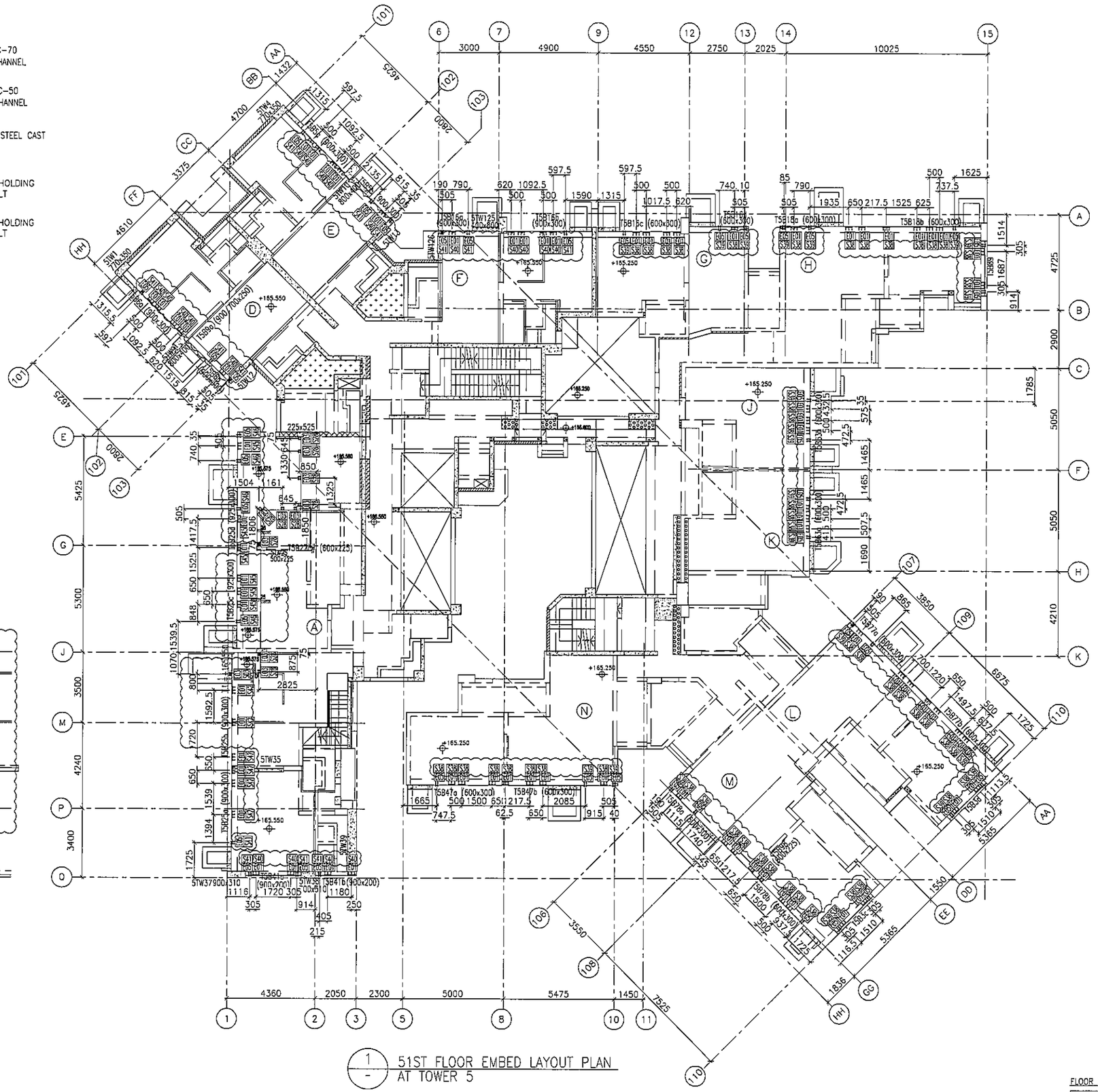

1 / - 51ST FLOOR EMBED LAYOUT PLAN AT TOWER 5

FLOOR LEVEL (S.F.L)(T3)

FLOOR NUMBERING	LEVEL (mPD)
51F	+165.250/+165.550

B.D. REF :

CLIENT : 信和置業有限公司 Sino Land Company Limited

ARCHITECT : WONG TUNG & PARTNERS LIMITED ARCHITECTS & PLANNERS

MAIN CONTRACTOR : CR Construction Company Limited

STRUCTURAL ENGINEER : AECOM

FACADE CONSULTANT: AECOM

NOTE :
1. ALL DIMENSIONS ARE IN mm.
2. ALL ELEVATIONS ARE VIEWED FROM OUTSIDE.
3. ALL DIMENSIONS TO BE VERIFIED ON SITE BEFORE FABRICATION.

LEGEND :
X1 — DETAIL MARK NO.
X001 — REFER SHEET NO.

1. F.F.L. --FINISHED FLOOR LEVEL
2. S.F.L. --STRUCTURAL FLOOR LEVEL
3. (R) --REVERSED DETAIL

NO.	DATE	REVISED	BY
K	20/06/2019	GENERAL REVISED	
J	03/06/2019	GENERAL REVISED	
I	24/05/2019	GENERAL REVISED	
H	07/04/2019	GENERAL REVISED	
G	19/01/2019	GENERAL REVISED	
F	13/01/2019	GENERAL REVISED	
E	22/12/2018	GENERAL REVISED	
D	08/11/2018	GENERAL REVISED	
C	11/10/2018	GENERAL REVISED	
B	8/10/2018	GENERAL REVISED	
A	14/9/2018	GENERAL REVISED	

JOB NO. : J-837

PROJECT : URA KWUN TONG TOWN CENTRE REDEVELOPMENT (AREA 2 & 3) AT NKIL 6514, KWUN TONG, KWLOON

TITLE : 51ST FLOOR EMBED LAYOUT PLAN OF CURTAIN WALL AT TOWER 5

DATE : 10-SEP-18 | SCALE : 1:100 (A1)

DRAWN BY : ASING | CHECKED BY : -

美特鋁質有限公司 MIDI ALUMINUM FABRICATOR LTD.
Units 6-8, Sunray Industrial Centre, 1/F
610 Cha Kwo Ling Road, Kowloon
Tel:23489211-4 Fax:(852)27727666

DWG NO. : J837-CW-1507 | REV. : K

LEGEND :

- E01 = HILIT , HAC-70 CAST IN CHANNEL
- E02 = HILIT , HAC-50 CAST IN CHANNEL
- E04 = CAST-IN HOLDING DOWN BOLT
- E05 = CAST-IN HOLDING DOWN BOLT
- E06 = CAST-IN HOLDING DOWN BOLT
- E07 = CAST-IN HOLDING DOWN BOLT

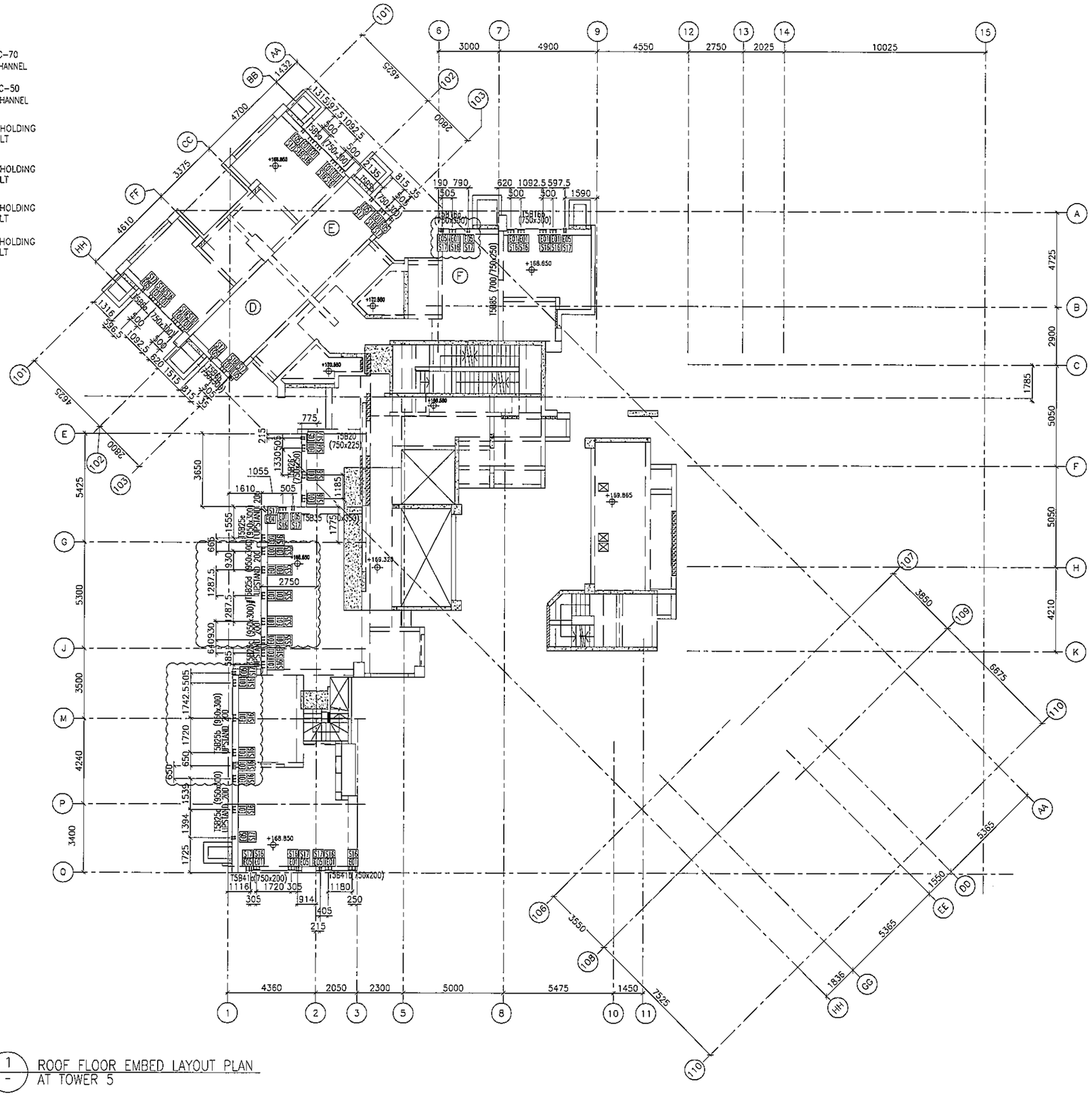

1 / - ROOF FLOOR EMBED LAYOUT PLAN AT TOWER 5

FLOOR LEVEL (S.F.L.)(T3)

FLOOR NUMBERING	LEVEL (mPD)
RF	+168.850

B.D. REF :

CLIENT : 信和置業有限公司 Sino Land Company Limited

ARCHITECT : WONG TUNG & PARTNERS LIMITED ARCHITECTS & PLANNERS

MAIN CONTRACTOR : CR Construction Company Limited

STRUCTURAL ENGINEER : AECOM

FACADE CONSULTANT: AECOM

NOTE :
1. ALL DIMENSIONS ARE IN mm.
2. ALL ELEVATIONS ARE VIEWED FROM OUTSIDE.
3. ALL DIMENSIONS TO BE VERIFIED ON SITE BEFORE FABRICATION.

LEGEND :
- X1 / XOD1 — DETAIL MARK NO. / REFER SHEET NO.
1. F.F.L. --FINISHED FLOOR LEVEL
2. S.F.L. --STRUCTURAL FLOOR LEVEL
3. /R --REVERSED DETAIL

NO.	DATE	REVISED	BY
E	20/06/2019	GENERAL REVISED	
D	03/06/2019	GENERAL REVISED	
C	23/05/2019	GENERAL REVISED	
B	07/04/2019	GENERAL REVISED	
A	22/12/2018	GENERAL REVISED	

JOB NO. : J-837

PROJECT : URA KWUN TONG TOWN CENTRE REDEVELOPMENT (AREA 2 & 3) AT NKIL 6514, KWUN TONG, KWLOON

TITLE : ROOF FLOOR EMBED LAYOUT PLAN OF CURTAIN WALL AT TOWER 5

DATE : 10-SEP-18 | SCALE : 1:100 (A1)

DRAWN BY : ASING | CHECKED BY : -

美特鋁質有限公司 MIDI ALUMINIUM FABRICATOR LTD.
Units 6-8, Sunray Industrial Centre, 1/F
610 Cha Kwo Ling Road, Kowloon
Tel:23489211-4 Fax:(852)27727666

DWG NO. : J837-CW-1508 | REV. : E

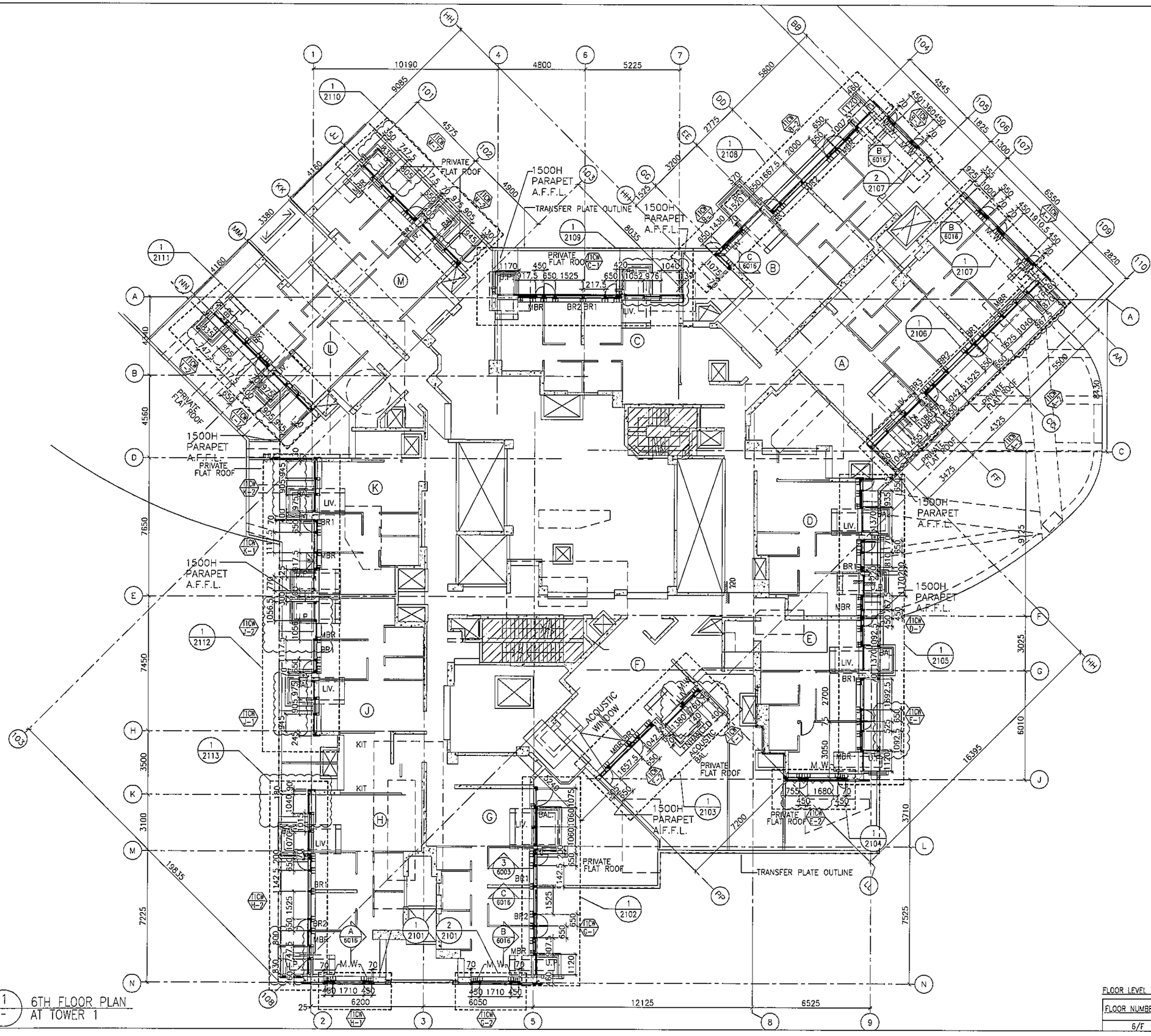

B.D. REF :

CLIENT :
信和置業有限公司
Sino Land Company Limited

ARCHITECT :
WONG TUNG & PARTNERS LIMITED
ARCHITECTS & PLANNERS

MAIN CONTRACTOR :
CR Construction Company Limited

STRUCTURAL ENGINEER :
AECOM

FACADE CONSULTANT:
AECOM

NOTE :
1. ALL DIMENSIONS ARE IN mm.
2. ALL ELEVATIONS ARE VIEWED FROM OUTSIDE.
3. ALL DIMENSIONS TO BE VERIFIED ON SITE BEFORE FABRICATION.

LEGEND :
- (X1) — DETAIL MARK NO.
- (X001) — REFER SHEET NO.

1. F.F.L. --FINISHED FLOOR LEVEL
2. S.F.L. --STRUCTURAL FLOOR LEVEL
3. (/R) --REVERSED DETAIL

NO.	DATE	REVISED	BY
J	18/08/2019	GENERAL REVISED	
I	26/05/2019	GENERAL REVISED	
H	07/04/2019	GENERAL REVISED	
G	19/01/2019	GENERAL REVISED	
F	22/12/2018	GENERAL REVISED	
E	01/12/2018	GENERAL REVISED	
D	24/11/2018	GENERAL REVISED	
C	11/10/2018	GENERAL REVISED	
B	28/9/2018	GENERAL REVISED	
A	10/9/2018	GENERAL REVISED	

JOB NO. : J-837

PROJECT :
URA KWUN TONG TOWN CENTRE REDEVELOPMENT (AREA 2 & 3) AT NKIL 6514, KWUN TONG, KWLOON

TITLE :
6TH FLOOR PLAN
OF CURTAIN WALL
AT TOWER 1

DATE : 04-JUL-18 | SCALE : 1:100 (A1)

DRAWN BY : ASING | CHECKED BY : -

FLOOR LEVEL (S.F.L.)(T1)

FLOOR NUMBERING	LEVEL (mPD)
6/F	+38.900

美特鋁製有限公司
MIDI ALUMINIUM FABRICATOR LTD.
Units 6-8, Sunray Industrial Centre, 1/F
610 Cha Kwo Ling Road, Kowloon
Tel:23489211-4 Fax:(852)27727666

DWG NO. : J837-CW-3101 | REV. : J

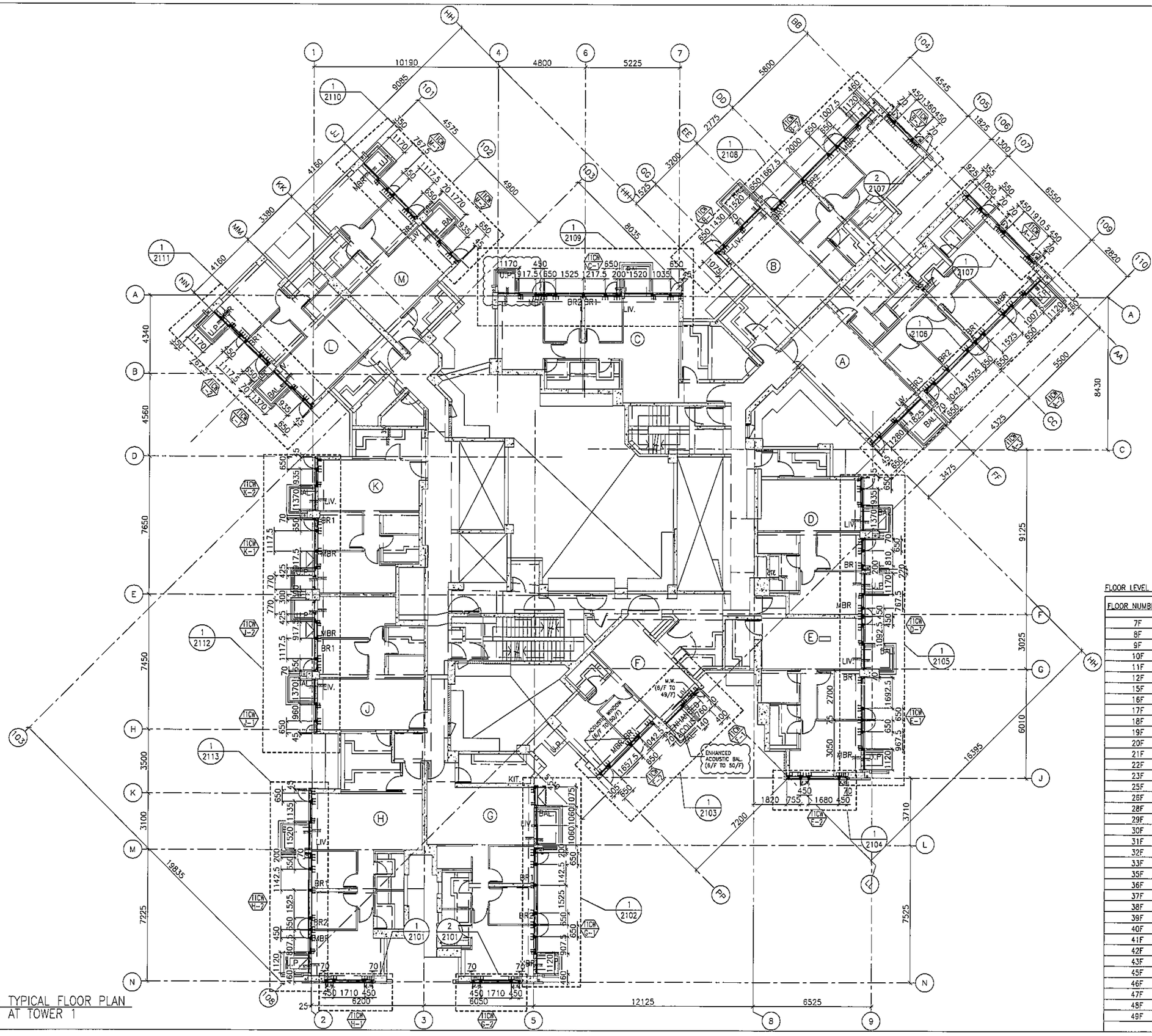

1 / - TYPICAL FLOOR PLAN AT TOWER 1

FLOOR LEVEL (S.F.L.)(T1)

FLOOR NUMBERING	LEVEL (mPD)
7F	42.400
8F	45.550
9F	48.700
10F	51.850
11F	55.000
12F	58.150
15F	61.300
16F	64.450
17F	67.600
18F	70.750
19F	73.900
20F	77.050
21F	80.200
22F	83.350
23F	86.500
25F	89.650
26F	92.800
28F	99.250
29F	102.250
30F	105.400
31F	108.550
32F	111.700
33F	114.850
35F	118.000
36F	121.150
37F	124.300
38F	127.450
39F	130.600
40F	133.750
41F	136.900
42F	140.050
43F	143.100
45F	146.350
46F	149.500
47F	152.650
48F	155.800
49F	158.950

B.D. REF :

CLIENT :
信和置業有限公司
Sino Land Company Limited

ARCHITECT :
WONG TUNG & PARTNERS LIMITED
ARCHITECTS & PLANNERS

MAIN CONTRACTOR :
CR Construction Company Limited

STRUCTURAL ENGINEER :
AECOM

FACADE CONSULTANT:
AECOM

NOTE :
1. ALL DIMENSIONS ARE IN mm.
2. ALL ELEVATIONS ARE VIEWED FROM OUTSIDE.
3. ALL DIMENSIONS TO BE VERIFIED ON SITE BEFORE FABRICATION.

LEGEND :
X1 / XD01 — DETAIL MARK NO. / REFER SHEET NO.
1. F.F.L. --FINISHED FLOOR LEVEL
2. S.F.L. --STRUCTURAL FLOOR LEVEL
3. /R --REVERSED DETAIL

NO.	DATE	REVISED	BY
G	07/04/2019	GENERAL REVISED	
F	19/01/2019	GENERAL REVISED	
E	22/12/2018	GENERAL REVISED	
D	01/12/2018	GENERAL REVISED	
C	24/11/2018	GENERAL REVISED	
B	11/10/2018	GENERAL REVISED	
A	10/9/2018	GENERAL REVISED	

JOB NO. : J-837

PROJECT :
URA KWUN TONG TOWN CENTRE REDEVELOPMENT (AREA 2 & 3) AT NKIL 6514, KWUN TONG, KWLOON

TITLE :
TYPICAL FLOOR PLAN OF CURTAIN WALL AT TOWER 1

DATE : 04-JUL-18 | SCALE : 1:100 (A1)

DRAWN BY : ASING | CHECKED BY : -

美特鋁質有限公司
MIDI ALUMINIUM FABRICATOR LTD.
Units 6-8, Sunray Industrial Centre, 1/F
610 Cha Kwo Ling Road, Kowloon
Tel:23489211-4 Fax:(852)27727666

DWG NO. : J837-CW-3102 | REV. : G

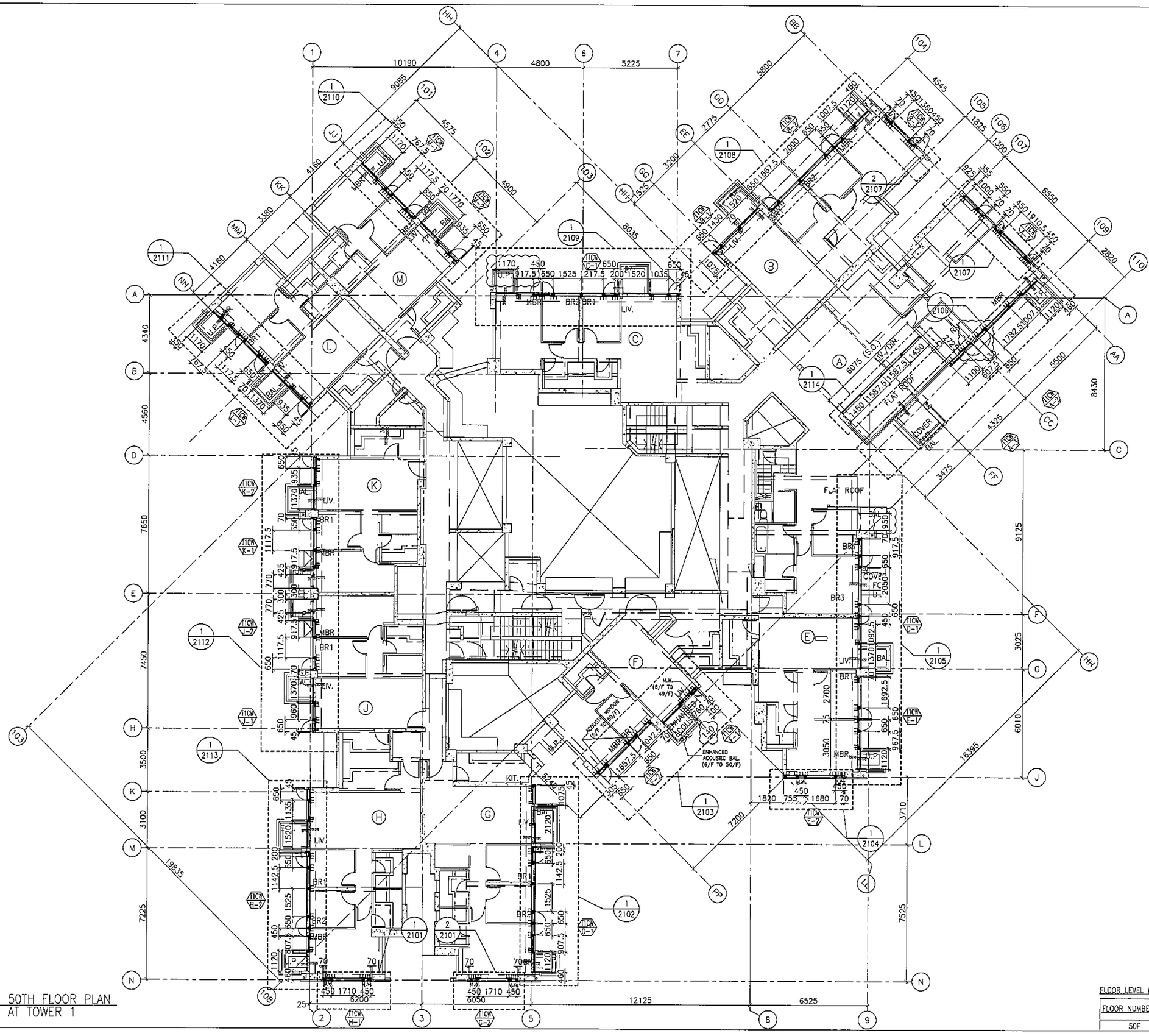

B.D. REF :

CLIENT :
信和置業有限公司
Sino Land Company Limited

ARCHITECT :
WONG TUNG & PARTNERS LIMITED
ARCHITECTS & PLANNERS

MAIN CONTRACTOR :
CR Construction Company Limited

STRUCTURAL ENGINEER :
AECOM

FACADE CONSULTANT:
AECOM

NOTE :
1. ALL DIMENSIONS ARE IN mm.
2. ALL ELEVATIONS ARE VIEWED FROM OUTSIDE.
3. ALL DIMENSIONS TO BE VERIFIED ON SITE BEFORE FABRICATION.

LEGEND :
- X1 / XOO1 — DETAIL MARK NO. / REFER SHEET NO.
1. F.F.L. --FINISHED FLOOR LEVEL
2. S.F.L. --STRUCTURAL FLOOR LEVEL
3. (/R) --REVERSED DETAIL

NO.	DATE	REVISED	BY
I	03/06/2019	GENERAL REVISED	
H	07/04/2019	GENERAL REVISED	
G	21/02/2019	GENERAL REVISED	
F	28/01/2019	GENERAL REVISED	
E	19/01/2019	GENERAL REVISED	
D	22/12/2018	GENERAL REVISED	
C	01/12/2018	GENERAL REVISED	
B	24/11/2018	GENERAL REVISED	
A	11/10/2018	GENERAL REVISED	

JOB NO. : J-837

PROJECT :
URA KWUN TONG TOWN CENTRE REDEVELOPMENT (AREA 2 & 3) AT NKIL 6514, KWUN TONG, KWLOON

TITLE :
50TH FLOOR PLAN
OF CURTAIN WALL
AT TOWER 1

DATE : 10-SEP-18 | SCALE : 1:100 (A1)

DRAWN BY : ASING | CHECKED BY : -

美特鋁質有限公司
MIDI ALUMINIUM FABRICATOR LTD.
Units 6-8, Sunray Industrial Centre, 1/F
610 Cha Kwo Ling Road, Kowloon
Tel:23489211-4 Fax:(852)27727666

DWG NO. : J837-CW-3103 | REV. : I

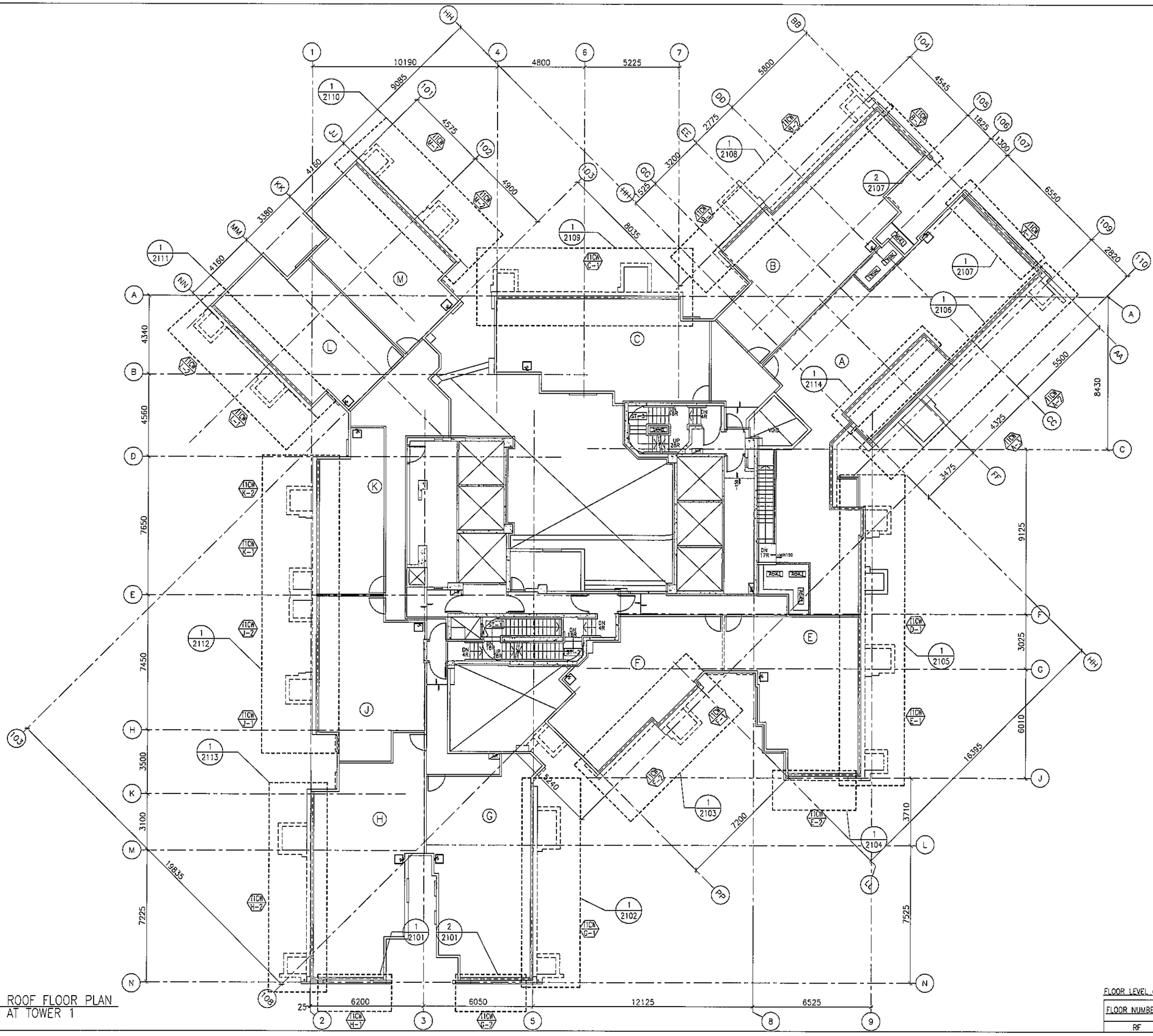

1 / - ROOF FLOOR PLAN AT TOWER 1

FLOOR LEVEL (S.F.L.)(T1)

FLOOR NUMBERING	LEVEL (mPD)
RF	+165.400

B.D. REF :

CLIENT :
信和置業有限公司
Sino Land Company Limited

ARCHITECT :
WONG TUNG & PARTNERS LIMITED
ARCHITECTS & PLANNERS

MAIN CONTRACTOR :
CR Construction Company Limited

STRUCTURAL ENGINEER :
AECOM

FACADE CONSULTANT:
AECOM

NOTE :
1. ALL DIMENSIONS ARE IN mm.
2. ALL ELEVATIONS ARE VIEWED FROM OUTSIDE.
3. ALL DIMENSIONS TO BE VERIFIED ON SITE BEFORE FABRICATION.

LEGEND :
X1 — DETAIL MARK NO.
X001 — REFER SHEET NO.

1. F.F.L. --FINISHED FLOOR LEVEL
2. S.F.L. --STRUCTURAL FLOOR LEVEL
3. /R --REVERSED DETAIL

NO.	DATE	REVISED	BY
C	16/07/2019	GENERAL REVISED	
B	21/02/2019	GENERAL REVISED	
A	28/01/2019	GENERAL REVISED	

JOB NO. : J-837

PROJECT :
URA KWUN TONG TOWN CENTRE REDEVELOPMENT (AREA 2 & 3) AT NKIL 6514, KWUN TONG, KWLOON

TITLE :
ROOF FLOOR PLAN OF CURTAIN WALL AT TOWER 1

DATE : 10-SEP-18 | SCALE : 1:100 (A1)

DRAWN BY : ASING | CHECKED BY : -

美特鋁質有限公司
MIDI ALUMINIUM FABRICATOR LTD.
Units 6-8, Sunray Industrial Centre, 1/F
610 Cha Kwo Ling Road, Kowloon
Tel:23489211-4 Fax:(852)27727666

DWG NO. : J837-CW-3104 | REV. : C

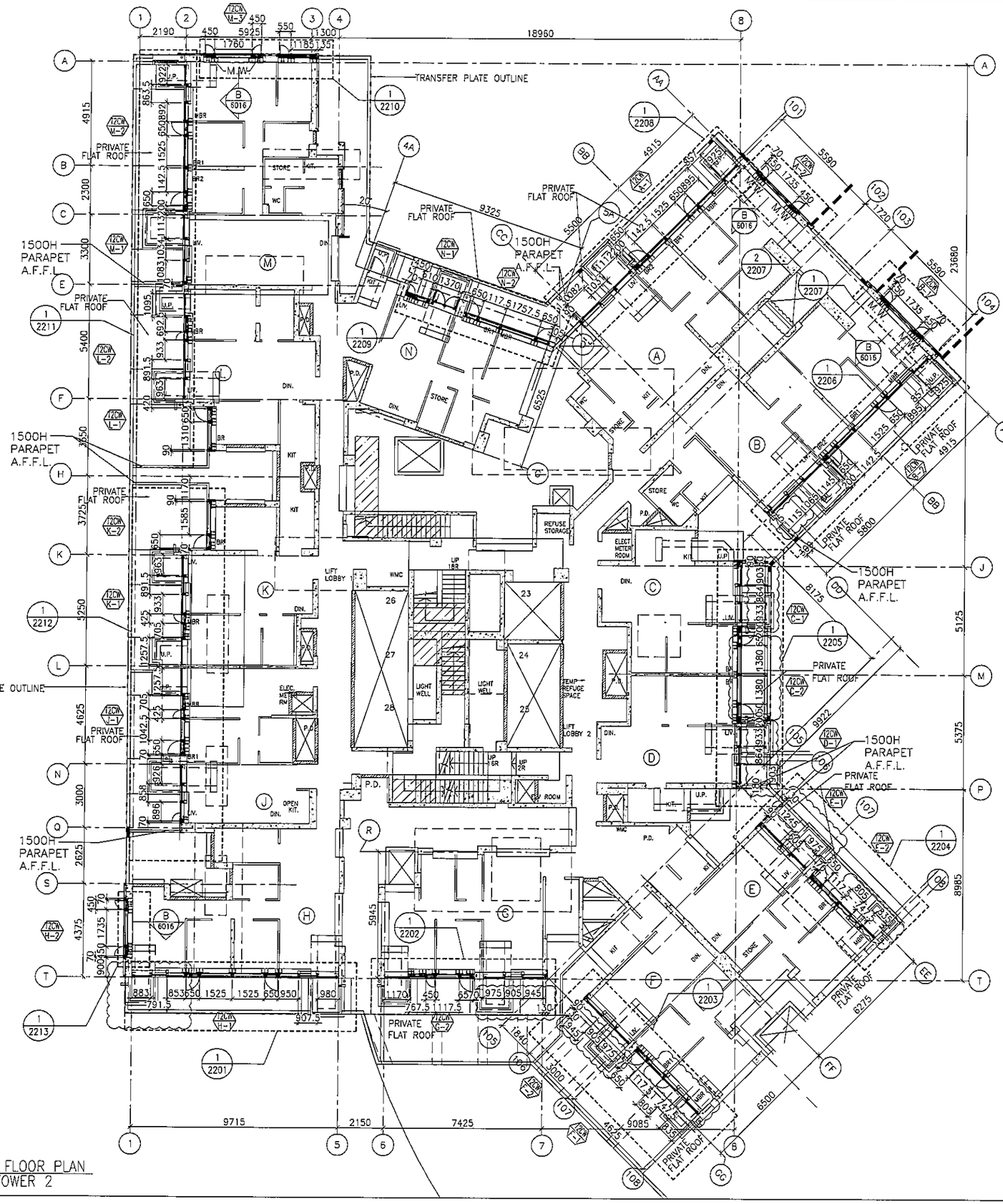

1 6TH FLOOR PLAN
- AT TOWER 2

FLOOR LEVEL (S.F.L.)(T2)

FLOOR NUMBERING	LEVEL (mPD)
6/F	+38.900

B.D. REF :

CLIENT :
信和置業有限公司
Sino Land Company Limited

ARCHITECT : WONG TUNG & PARTNERS LIMITED
ARCHITECTS & PLANNERS

MAIN CONTRACTOR :
CR Construction Company Limited

STRUCTURAL ENGINEER :
AECOM

FACADE CONSULTANT:
AECOM

NOTE :
1. ALL DIMENSIONS ARE IN mm.
2. ALL ELEVATIONS ARE VIEWED FROM OUTSIDE.
3. ALL DIMENSIONS TO BE VERIFIED ON SITE BEFORE FABRICATION.

LEGEND :
- X1 / XCD1 — DETAIL MARK NO. / REFER SHEET NO.
1. F.F.L. --FINISHED FLOOR LEVEL
2. S.F.L. --STRUCTURAL FLOOR LEVEL
3. /R --REVERSED DETAIL

NO.	DATE	REVISED	BY
H	18/08/2019	GENERAL REVISED	
G	26/05/2019	GENERAL REVISED	
F	19/01/2019	GENERAL REVISED	
E	22/12/2018	GENERAL REVISED	
D	24/11/2018	GENERAL REVISED	
C	8/10/2018	GENERAL REVISED	
B	28/9/2018	GENERAL REVISED	
A	10/9/2018	GENERAL REVISED	

JOB NO. : J-837

PROJECT :
URA KWUN TONG TOWN CENTRE REDEVELOPMENT (AREA 2 & 3) AT NKIL 6514, KWUN TONG, KWLOON

TITLE :
6TH FLOOR PLAN OF CURTAIN WALL AT TOWER 2

DATE : 04-JUL-18 | SCALE : 1:100 (A1)

DRAWN BY : ASING | CHECKED BY : -

美特鋁質有限公司
MIDI ALUMINIUM FABRICATOR LTD.
Units 6-8, Sunray Industrial Centre, 1/F
610 Cha Kwo Ling Road, Kowloon
Tel:23489211-4 Fax:(852)27727666

DWG NO. : J837-CW-3201 | REV. : H

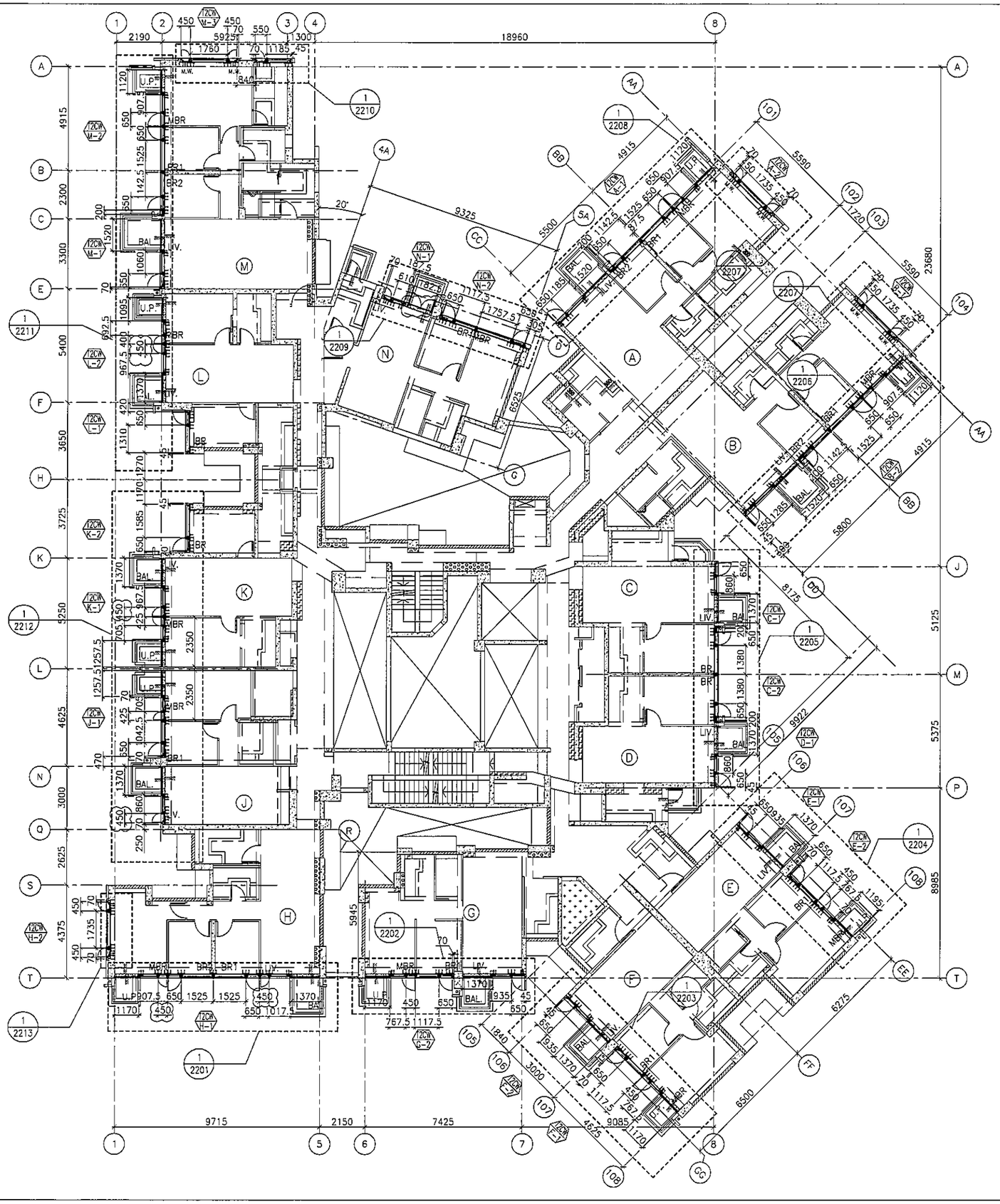

1 / - TYPICAL FLOOR PLAN AT TOWER 2

FLOOR LEVEL (S.F.L.)(T2)

FLOOR NUMBERING	LEVEL (mPD)
7F	42.400
8F	45.550
9F	48.700
10F	51.850
11F	55.000
12F	58.150
15F	61.300
16F	64.450
17F	67.600
18F	70.750
19F	73.900
20F	77.050
21F	80.200
22F	83.350
23F	86.500
25F	89.650
26F	92.800
28F	99.250
29F	102.250
30F	105.400
31F	108.550
32F	111.700
33F	114.850
35F	118.000
36F	121.150
37F	124.300
38F	127.450
39F	130.600
40F	133.750
41F	136.900
42F	140.050
43F	143.100
45F	146.350
46F	149.500
47F	152.650
48F	155.800
49F	158.950
50F	162.100
51F	165.250
52F	168.400
53F	171.550

B.D. REF :

CLIENT :
信和置業有限公司
Sino Land Company Limited

ARCHITECT :
WONG TUNG & PARTNERS LIMITED
ARCHITECTS & PLANNERS

MAIN CONTRACTOR :
CR Construction Company Limited

STRUCTURAL ENGINEER :
AECOM

FACADE CONSULTANT:
AECOM

NOTE :
1. ALL DIMENSIONS ARE IN mm.
2. ALL ELEVATIONS ARE VIEWED FROM OUTSIDE.
3. ALL DIMENSIONS TO BE VERIFIED ON SITE BEFORE FABRICATION.

LEGEND :
X1 — DETAIL MARK NO.
XC01 — REFER SHEET NO.

1. F.F.L. --FINISHED FLOOR LEVEL
2. S.F.L. --STRUCTURAL FLOOR LEVEL
3. /R --REVERSED DETAIL

NO.	DATE	REVISED	BY
E	19/01/2019	GENERAL REVISED	
D	22/12/2018	GENERAL REVISED	
C	24/11/2018	GENERAL REVISED	
B	8/10/2018	GENERAL REVISED	
A	10/9/2018	GENERAL REVISED	

JOB NO. : J-837

PROJECT :
URA KWUN TONG TOWN CENTRE REDEVELOPMENT (AREA 2 & 3) AT NKIL 6514, KWUN TONG, KWLOON

TITLE :
TYPICAL FLOOR PLAN OF CURTAIN WALL AT TOWER 2

DATE : 04-JUL-18 | SCALE : 1:100 (A1)

DRAWN BY : ASING | CHECKED BY : -

美特鋁質有限公司
MIDI ALUMINIUM FABRICATOR LTD.
Units 6-8, Sunray Industrial Centre, 1/F
610 Cha Kwo Ling Road, Kowloon
Tel:23489211-4 Fax:(852)27727666

DWG NO. : J837-CW-3202 | REV. : E

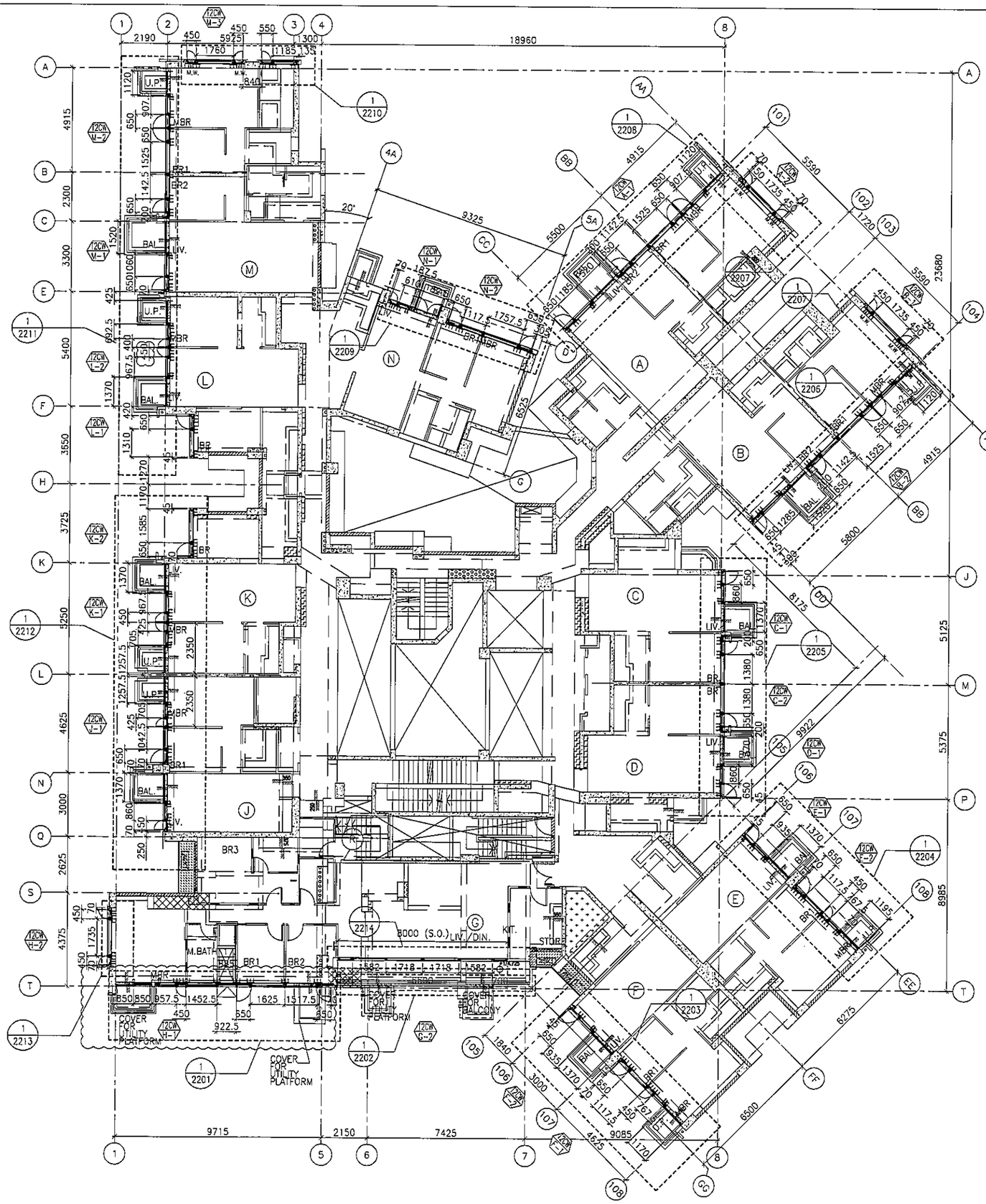

1 / - 55TH FLOOR PLAN AT TOWER 2

FLOOR LEVEL (S.F.L.)(T2)

FLOOR NUMBERING	LEVEL (mPD)
55F	+174.700

B.D. REF :

CLIENT :
信和置業有限公司
Sino Land Company Limited

ARCHITECT : WONG TUNG & PARTNERS LIMITED ARCHITECTS & PLANNERS

MAIN CONTRACTOR :
CR Construction Company Limited

STRUCTURAL ENGINEER : AECOM

FACADE CONSULTANT: AECOM

NOTE :
1. ALL DIMENSIONS ARE IN mm.
2. ALL ELEVATIONS ARE VIEWED FROM OUTSIDE.
3. ALL DIMENSIONS TO BE VERIFIED ON SITE BEFORE FABRICATION.

LEGEND :
- X1 / XG01 — DETAIL MARK NO. / REFER SHEET NO.
1. F.F.L. --FINISHED FLOOR LEVEL
2. S.F.L. --STRUCTURAL FLOOR LEVEL
3. (/R) --REVERSED DETAIL

NO.	DATE	REVISED	BY
H	02/08/2019	GENERAL REVISED	
G	09/07/2019	GENERAL REVISED	
F	03/06/2019	GENERAL REVISED	
E	07/04/2019	GENERAL REVISED	
D	21/02/2019	GENERAL REVISED	
C	19/01/2019	GENERAL REVISED	
B	22/12/2018	GENERAL REVISED	
A	24/11/2018	GENERAL REVISED	

JOB NO. : J-837

PROJECT :
URA KWUN TONG TOWN CENTRE REDEVELOPMENT (AREA 2 & 3) AT NKIL 6514, KWUN TONG, KWLOON

TITLE :
55TH FLOOR PLAN OF CURTAIN WALL AT TOWER 2

DATE : 10-SEP-18 | SCALE : 1:100 (A1)

DRAWN BY : ASING | CHECKED BY : --

美特鋁質有限公司
MIDI ALUMINIUM FABRICATOR LTD.
Units 6-8, Sunray Industrial Centre, 1/F
610 Cha Kwo Ling Road, Kowloon
Tel:23489211-4 Fax:(852)27727666

DWG NO. : J837-CW-3203 | REV. : H

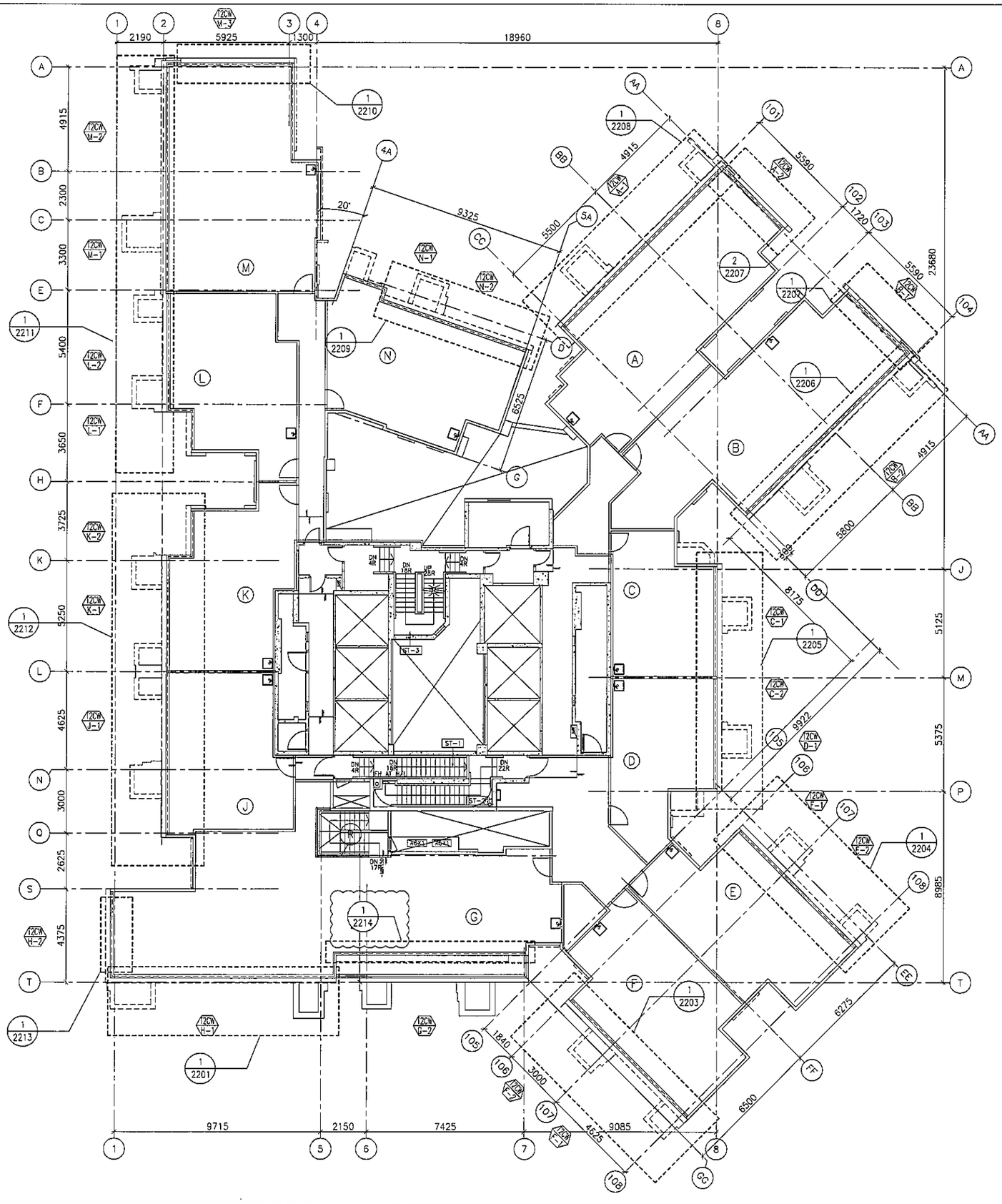

1 / - ROOF FLOOR PLAN AT TOWER 2

FLOOR LEVEL (S.F.L.)(T2)

FLOOR NUMBERING	LEVEL (mPD)
RF	+178.000

B.D. REF :

CLIENT :
信和置業有限公司
Sino Land Company Limited

ARCHITECT :
WONG TUNG & PARTNERS LIMITED
ARCHITECTS & PLANNERS

MAIN CONTRACTOR :
CR Construction Company Limited

STRUCTURAL ENGINEER :
AECOM

FACADE CONSULTANT:
AECOM

NOTE :
1. ALL DIMENSIONS ARE IN mm.
2. ALL ELEVATIONS ARE VIEWED FROM OUTSIDE.
3. ALL DIMENSIONS TO BE VERIFIED ON SITE BEFORE FABRICATION.

LEGEND :
X1 / X001 — DETAIL MARK NO. / REFER SHEET NO.
1. F.F.L. --- FINISHED FLOOR LEVEL
2. S.F.L. --- STRUCTURAL FLOOR LEVEL
3. /R --- REVERSED DETAIL

NO.	DATE	REVISED	BY
C	16/07/2019	GENERAL REVISED	
B	21/02/2019	GENERAL REVISED	
A	22/12/2018	GENERAL REVISED	

JOB NO. : J-837

PROJECT :
URA KWUN TONG TOWN CENTRE REDEVELOPMENT (AREA 2 & 3) AT NKIL 6514, KWUN TONG, KWLOON

TITLE :
ROOF FLOOR PLAN OF CURTAIN WALL AT TOWER 2

DATE : 10-SEP-18 | SCALE : 1:100 (A1)

DRAWN BY : ASING | CHECKED BY : -

美特鋁質有限公司
MIDI ALUMINIUM FABRICATOR LTD.
Units 6-8, Sunray Industrial Centre, 1/F
610 Cha Kwo Ling Road, Kowloon
Tel:23489211-4 Fax:(852)27727666

DWG NO. : J837-CW-3204 | REV. : C

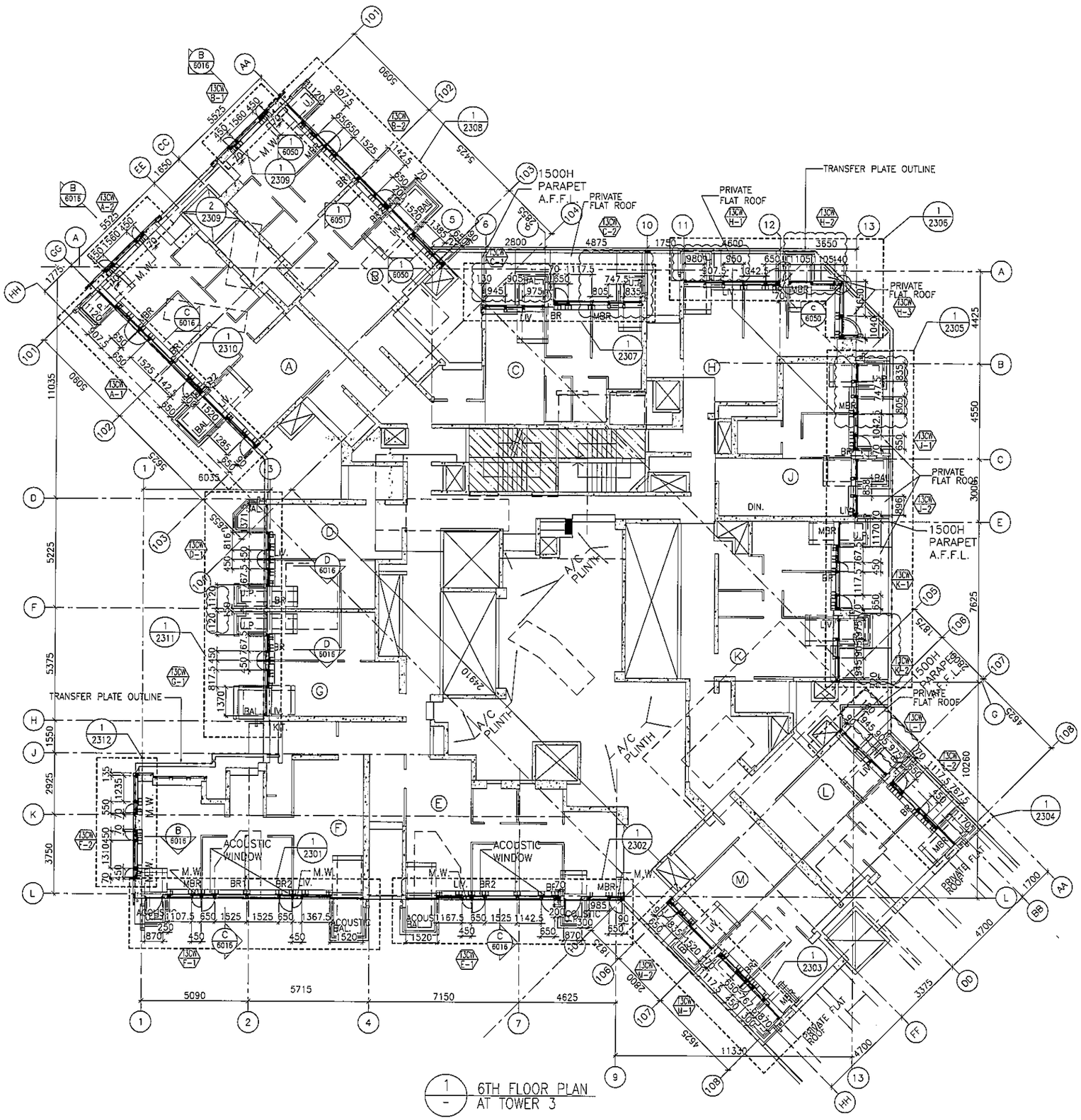

1 / - 6TH FLOOR PLAN AT TOWER 3

FLOOR LEVEL (S.F.L.)(T3)

FLOOR NUMBERING	LEVEL (mPD)
6/F	+38.900

B.D. REF :

CLIENT :
信和置業有限公司
Sino Land Company Limited

ARCHITECT :
WONG TUNG & PARTNERS LIMITED
ARCHITECTS & PLANNERS

MAIN CONTRACTOR :
CR Construction Company Limited

STRUCTURAL ENGINEER :
AECOM

FACADE CONSULTANT:
AECOM

NOTE :
1. ALL DIMENSIONS ARE IN mm.
2. ALL ELEVATIONS ARE VIEWED FROM OUTSIDE.
3. ALL DIMENSIONS TO BE VERIFIED ON SITE BEFORE FABRICATION.

LEGEND :
X1 — DETAIL MARK NO.
X001 — REFER SHEET NO.

1. F.F.L. --FINISHED FLOOR LEVEL
2. S.F.L. --STRUCTURAL FLOOR LEVEL
3. (/R) --REVERSED DETAIL

NO.	DATE	REVISED	BY
F	18/08/2019	GENERAL REVISED	
E	26/05/2019	GENERAL REVISED	
D	19/01/2019	GENERAL REVISED	
C	24/11/2018	GENERAL REVISED	
B	28/9/2018	GENERAL REVISED	
A	10/9/2018	GENERAL REVISED	

JOB NO. : J-837

PROJECT :
URA KWUN TONG TOWN CENTRE REDEVELOPMENT (AREA 2 & 3) AT NKIL 6514, KWUN TONG, KWLOON

TITLE :
6TH FLOOR PLAN OF CURTAIN WALL AT TOWER 3

DATE : 04-JUL-18 | SCALE : 1:100 (A1)

DRAWN BY : ASING | CHECKED BY : -

美特鋁質有限公司
MIDI ALUMINIUM FABRICATOR LTD.
Units 6-8, Sunray Industrial Centre, 1/F
610 Cha Kwo Ling Road, Kowloon
Tel:23489211-4 Fax:(852)27727666

DWG NO. : J837-CW-3301 | REV. : F

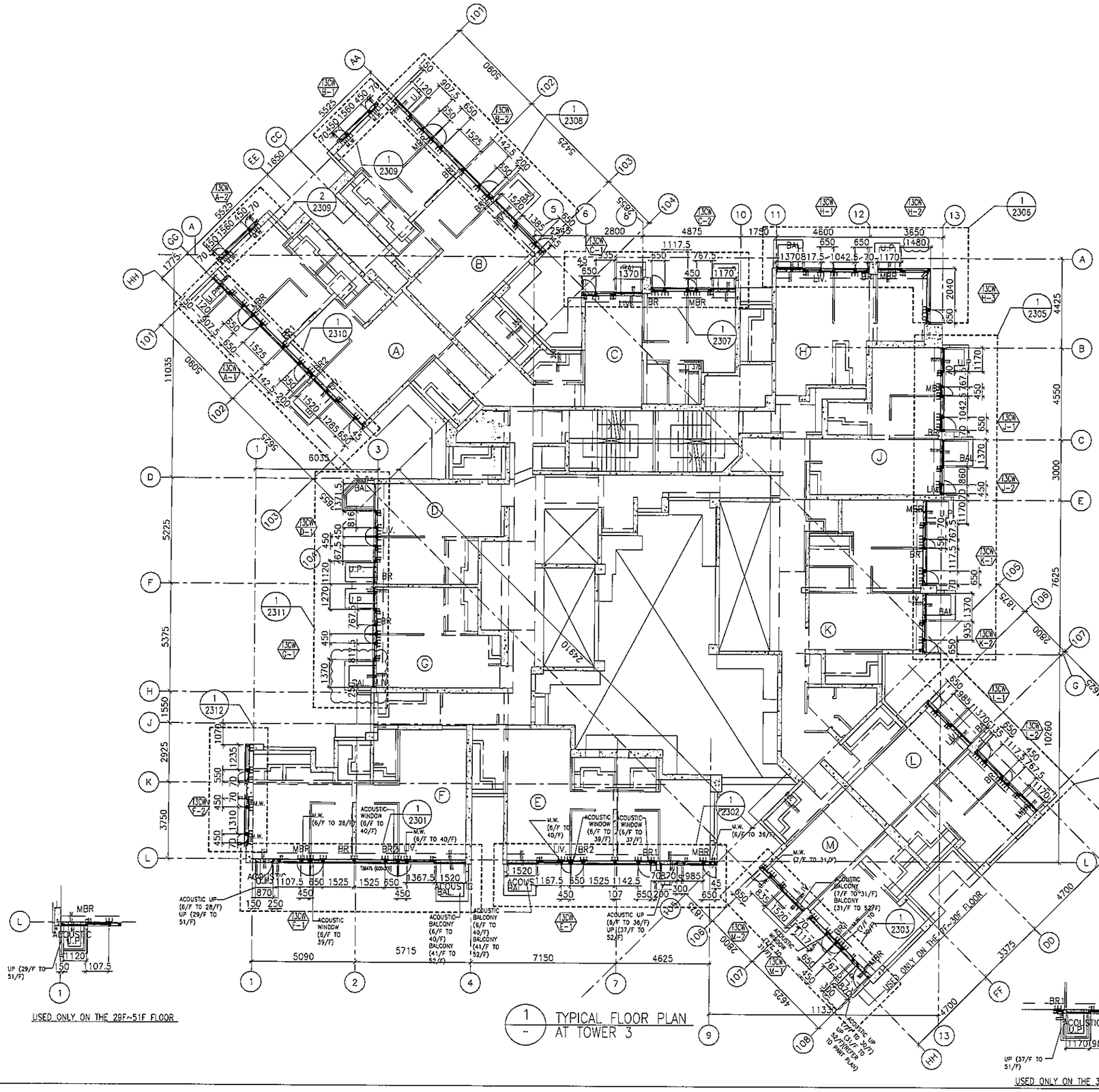

FLOOR LEVEL (S.F.L.)(T3)

FLOOR NUMBERING	LEVEL (mPD)
7F	42.400
8F	45.550
9F	48.700
10F	51.850
11F	55.000
12F	58.150
15F	61.300
16F	64.450
17F	67.600
18F	70.750
19F	73.900
20F	77.050
21F	80.200
22F	83.350
23F	86.500
25F	89.650
26F	92.800
28F	99.250
29F	102.250
30F	105.400
31F	108.550
32F	111.700
33F	114.850
35F	118.000
36F	121.150
37F	124.300
38F	127.450
39F	130.600
40F	133.750
41F	136.900
42F	140.050
43F	143.100
45F	146.350
46F	149.500
47F	152.650
48F	155.800
49F	158.950
50F	162.100
51F	165.250

B.D. REF :

CLIENT :
信和置業有限公司
Sino Land Company Limited

ARCHITECT :
WONG TUNG & PARTNERS LIMITED
ARCHITECTS & PLANNERS

MAIN CONTRACTOR :
CR Construction Company Limited

STRUCTURAL ENGINEER :
AECOM

FACADE CONSULTANT:
AECOM

NOTE :
1. ALL DIMENSIONS ARE IN mm.
2. ALL ELEVATIONS ARE VIEWED FROM OUTSIDE.
3. ALL DIMENSIONS TO BE VERIFIED ON SITE BEFORE FABRICATION.

LEGEND :
X1 — DETAIL MARK NO.
X/D1 — REFER SHEET NO.

1. F.F.L. --FINISHED FLOOR LEVEL
2. S.F.L. --STRUCTURAL FLOOR LEVEL
3. (R) --REVERSED DETAIL

NO.	DATE	REVISED	BY
C	24/11/2018	GENERAL REVISED	
B	11/10/2018	GENERAL REVISED	
A	10/9/2018	GENERAL REVISED	

JOB NO. : J-837

PROJECT :
URA KWUN TONG TOWN CENTRE
REDEVELOPMENT (AREA 2 & 3) AT
NKIL 6514, KWUN TONG, KWLOON

TITLE :
TYPICAL FLOOR PLAN
OF CURTAIN WALL
AT TOWER 3

DATE : 04-JUL-18 | SCALE : 1:100 (A1)

DRAWN BY : ASING | CHECKED BY : -

美特鋁質有限公司
MIDI ALUMINIUM FABRICATOR LTD.
Units 6-8, Sunray Industrial Centre, 1/F
610 Cha Kwo Ling Road, Kowloon
Tel:23489211-4 Fax:(852)27727666

DWG NO. : J837-CW-3302 | REV. : C

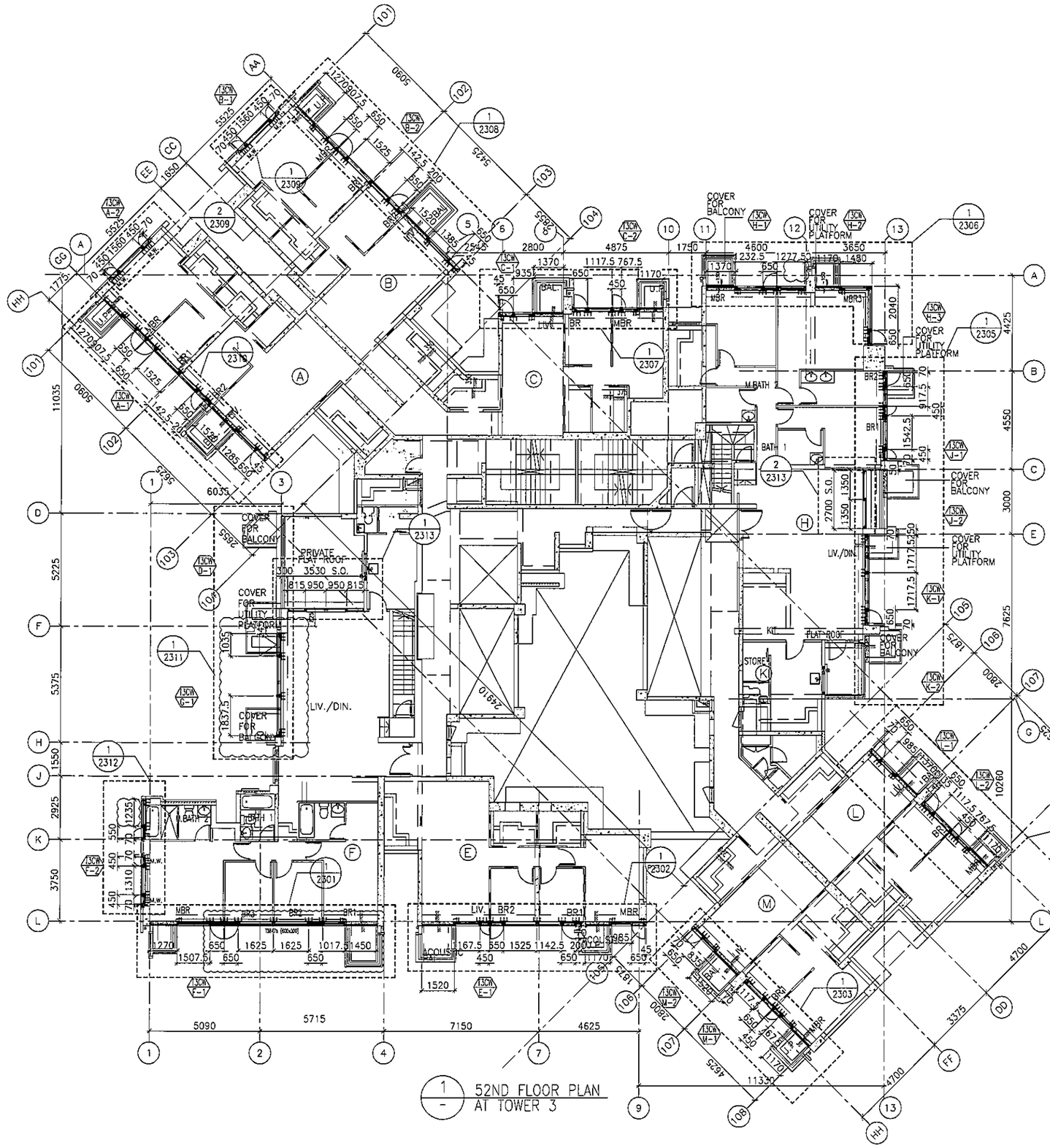

FLOOR LEVEL (S.F.L.)(T3)

FLOOR NUMBERING	LEVEL (mPD)
52F	+168.400

B.D. REF :

CLIENT :
信和置業有限公司
Sino Land Company Limited

ARCHITECT :
WONG TUNG & PARTNERS LIMITED
ARCHITECTS & PLANNERS

MAIN CONTRACTOR :
CR Construction Company Limited

STRUCTURAL ENGINEER :
AECOM

FACADE CONSULTANT:
AECOM

NOTE :
1. ALL DIMENSIONS ARE IN mm.
2. ALL ELEVATIONS ARE VIEWED FROM OUTSIDE.
3. ALL DIMENSIONS TO BE VERIFIED ON SITE BEFORE FABRICATION.

LEGEND :
X1 — DETAIL MARK NO.
X001 — REFER SHEET NO.
1. F.F.L. --FINISHED FLOOR LEVEL
2. S.F.L. --STRUCTURAL FLOOR LEVEL
3. /R --REVERSED DETAIL

NO.	DATE	REVISED	BY
F	03/06/2019	GENERAL REVISED	
E	19/5/2019	GENERAL REVISED	
D	7/4/2019	GENERAL REVISED	
C	22/12/2018	GENERAL REVISED	
B	24/11/2018	GENERAL REVISED	
A	11/10/2018	GENERAL REVISED	

JOB NO. : J-837

PROJECT :
URA KWUN TONG TOWN CENTRE REDEVELOPMENT (AREA 2 & 3) AT NKIL 6514, KWUN TONG, KWLOON

TITLE :
52ND FLOOR PLAN OF CURTAIN WALL AT TOWER 3

DATE : 10-SEP-18 | SCALE : 1:100 (A1)

DRAWN BY : ASING | CHECKED BY : -

美特鋁質有限公司
MIDI ALUMINIUM FABRICATOR LTD.
Units 6-8, Sunray Industrial Centre, 1/F
610 Cho Kwo Ling Road, Kowloon
Tel:23489211-4 Fax:(852)27727666

DWG NO. : J837-CW-3303 | REV. : F

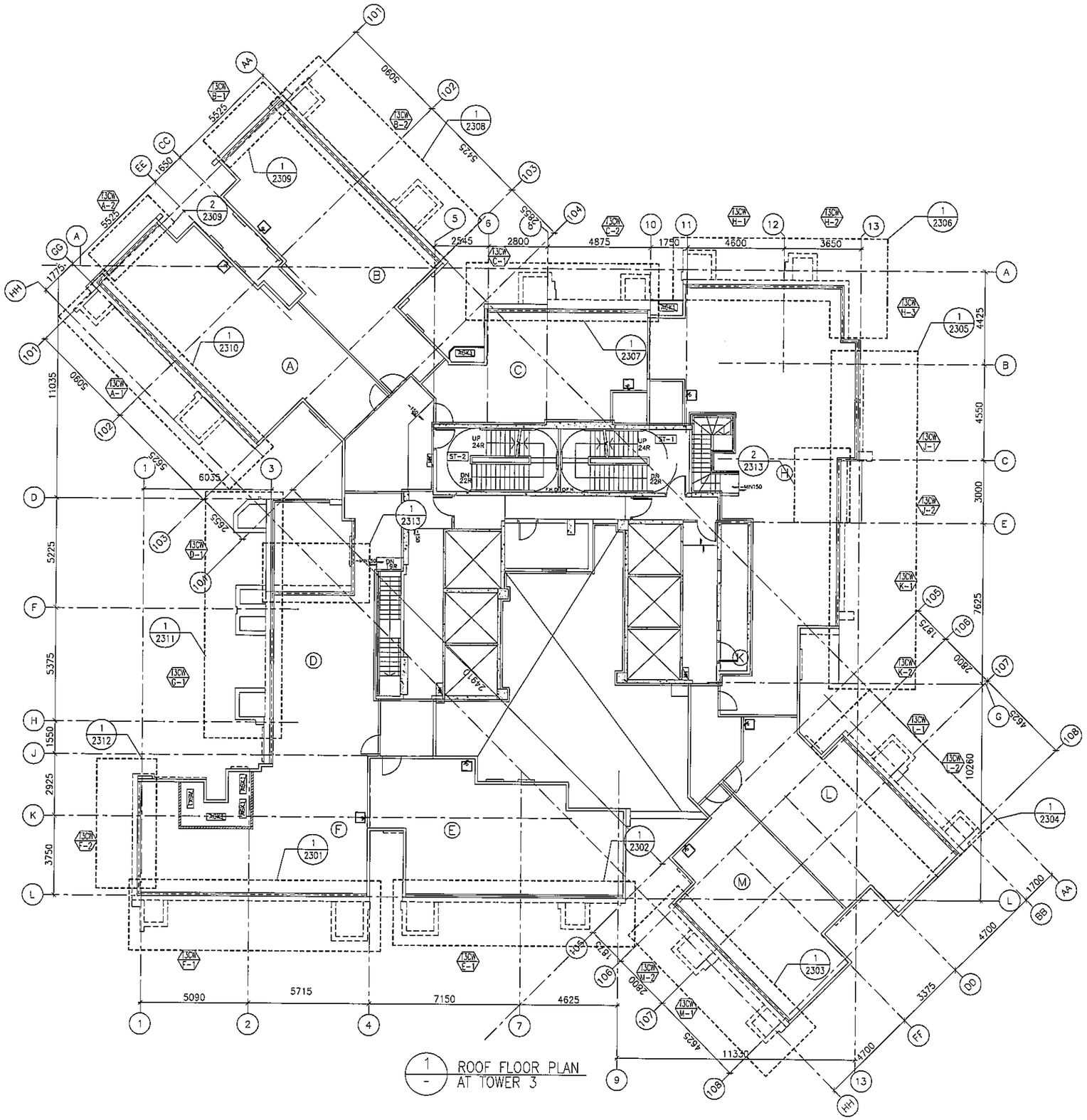

1 / - ROOF FLOOR PLAN AT TOWER 3

FLOOR LEVEL (S.F.L.)(T3)

FLOOR NUMBERING	LEVEL (mPD)
RF	+171.700

B.D. REF :

CLIENT :
信和置業有限公司
Sino Land Company Limited

ARCHITECT : WONG TUNG & PARTNERS LIMITED ARCHITECTS & PLANNERS

MAIN CONTRACTOR :
CR Construction Company Limited

STRUCTURAL ENGINEER :
AECOM

FACADE CONSULTANT:
AECOM

NOTE :
1. ALL DIMENSIONS ARE IN mm.
2. ALL ELEVATIONS ARE VIEWED FROM OUTSIDE.
3. ALL DIMENSIONS TO BE VERIFIED ON SITE BEFORE FABRICATION.

LEGEND :
X1 — DETAIL MARK NO.
X001 — REFER SHEET NO.

1. F.F.L. --FINISHED FLOOR LEVEL
2. S.F.L. --STRUCTURAL FLOOR LEVEL
3. /R --REVERSED DETAIL

NO.	DATE	REVISED	BY
A	16/07/2019	GENERAL REVISED	

JOB NO. : J-837

PROJECT :
URA KWUN TONG TOWN CENTRE REDEVELOPMENT (AREA 2 & 3) AT NKIL 6514, KWUN TONG, KWLOON

TITLE :
ROOF FLOOR PLAN OF CURTAIN WALL AT TOWER 3

DATE : 10-SEP-18 | SCALE : 1:100 (A1)

DRAWN BY : ASING | CHECKED BY : -

美特鋁製有限公司
MIDI ALUMINIUM FABRICATOR LTD.
Units 6-8, Sunray Industrial Centre, 1/F
610 Cha Kwo Ling Road, Kowloon
Tel:23489211-4 Fax:(852)27727666

DWG NO. : J837-CW-3304 | REV. : A

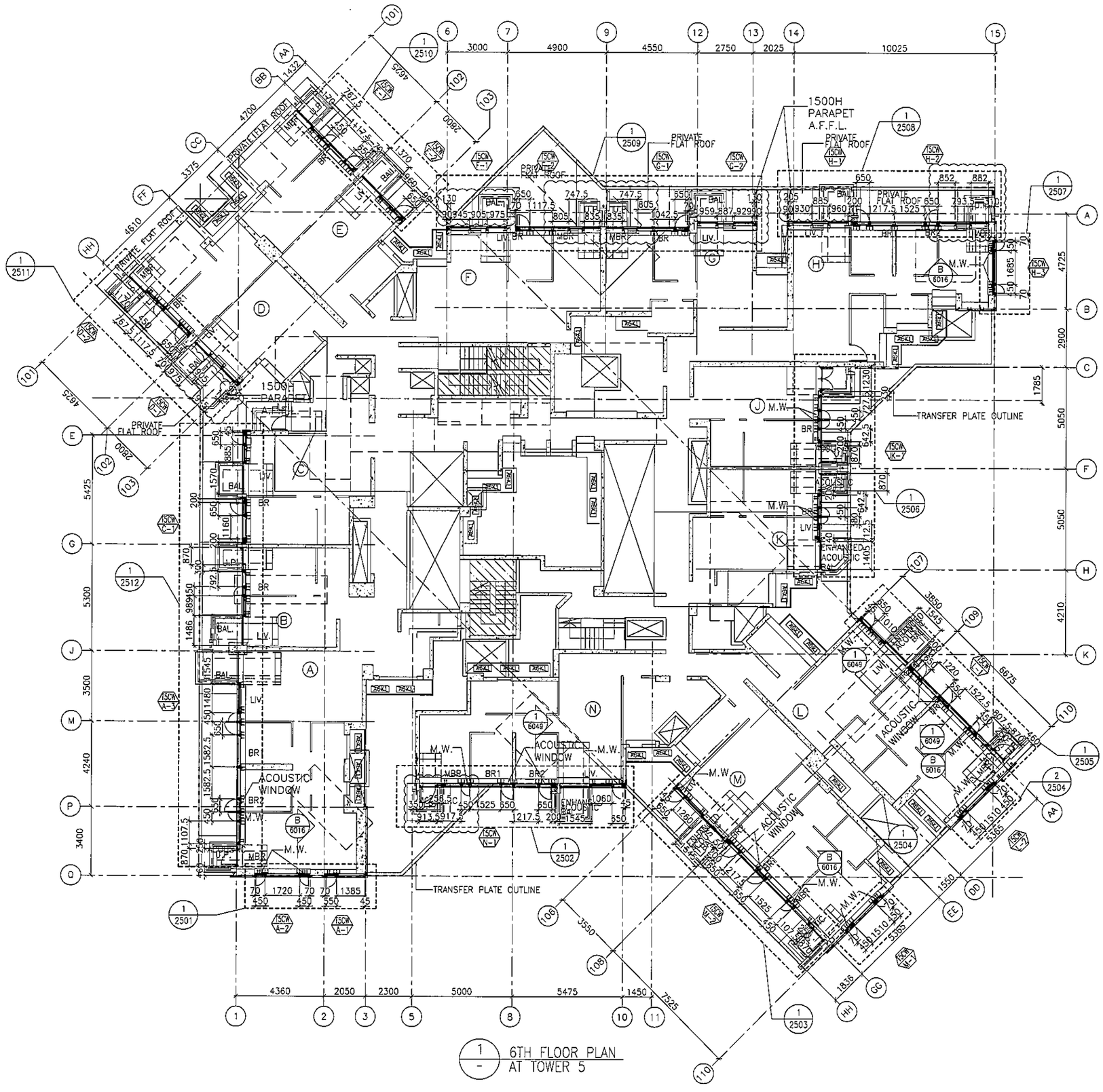

FLOOR LEVEL (S.F.L.)(T3)

FLOOR NUMBERING	LEVEL (mPD)
6/F	+38.900

B.D. REF :

CLIENT :
信和置業有限公司
Sino Land Company Limited

ARCHITECT :
WONG TUNG & PARTNERS LIMITED
ARCHITECTS & PLANNERS

MAIN CONTRACTOR :
CR Construction Company Limited

STRUCTURAL ENGINEER :
AECOM

FACADE CONSULTANT:
AECOM

NOTE :
1. ALL DIMENSIONS ARE IN mm.
2. ALL ELEVATIONS ARE VIEWED FROM OUTSIDE.
3. ALL DIMENSIONS TO BE VERIFIED ON SITE BEFORE FABRICATION.

LEGEND :
X1 — DETAIL MARK NO.
X001 — REFER SHEET NO.

1. F.F.L. --FINISHED FLOOR LEVEL
2. S.F.L. --STRUCTURAL FLOOR LEVEL
3. /R --REVERSED DETAIL

NO.	DATE	REVISED	BY
I	18/08/2019	GENERAL REVISED	
H	26/05/2019	GENERAL REVISED	
G	19/01/2019	GENERAL REVISED	
F	22/12/2018	GENERAL REVISED	
E	24/11/2018	GENERAL REVISED	
D	11/10/2018	GENERAL REVISED	
C	8/10/2018	GENERAL REVISED	
B	28/9/2018	GENERAL REVISED	
A	10/9/2018	GENERAL REVISED	

JOB NO. : J-837

PROJECT :
URA KWUN TONG TOWN CENTRE REDEVELOPMENT (AREA 2 & 3) AT NKIL 6514, KWUN TONG, KWLOON

TITLE :
6TH FLOOR PLAN OF CURTAIN WALL AT TOWER 5

DATE : 04-JUL-18 | SCALE : 1:100 (A1)

DRAWN BY : ASING | CHECKED BY : -

美特鋁質有限公司
MIDI ALUMINIUM FABRICATOR LTD.
Units 6-8, Sunray Industrial Centre, 1/F
610 Cha Kwo Ling Road, Kowloon
Tel:23489211-4 Fax:(852)27727666

DWG NO. : J837-CW-3501 | REV. : I

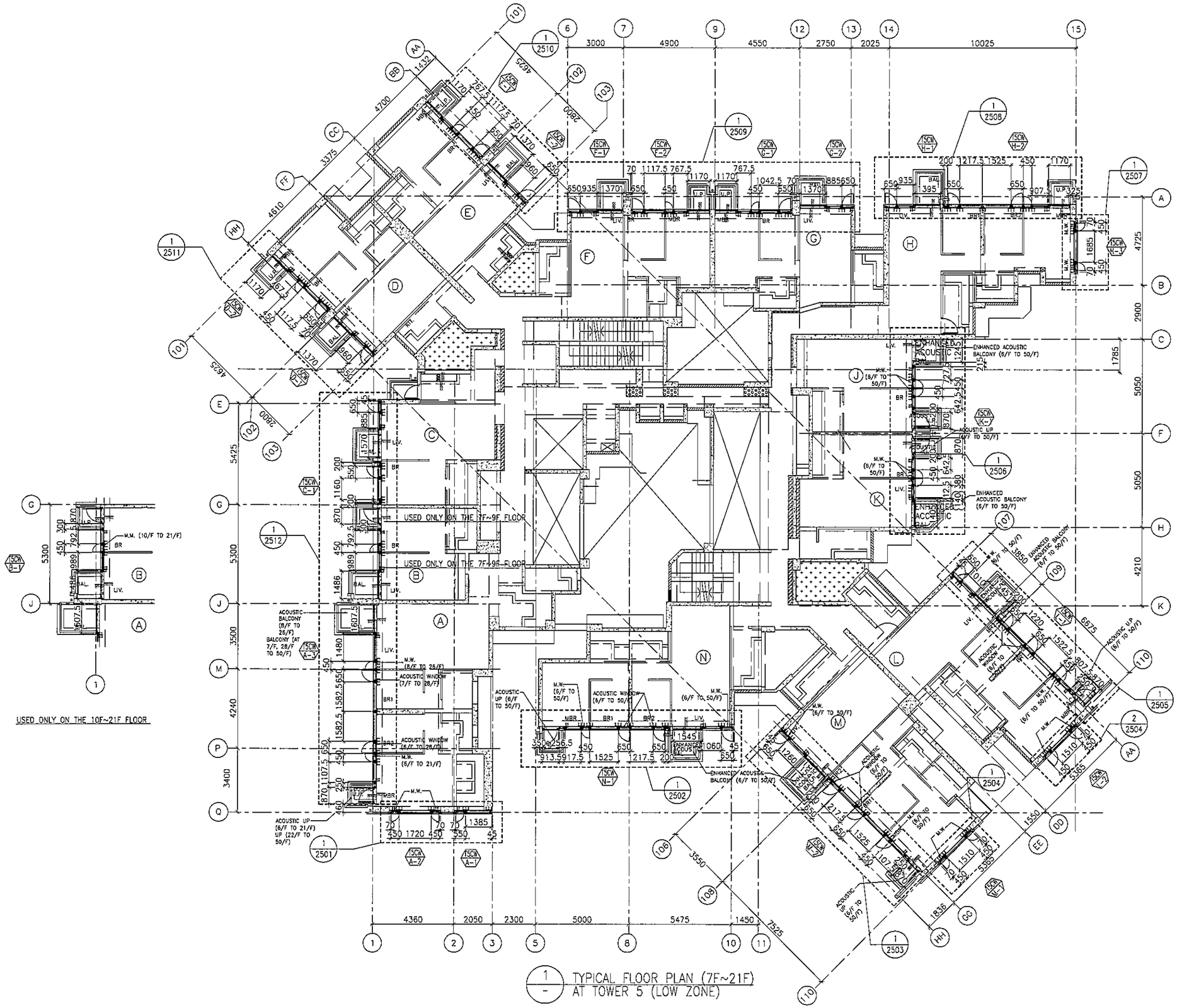
USED ONLY ON THE 7F~9F FLOOR
USED ONLY ON THE 7F~9F FLOOR
USED ONLY ON THE 10F~21F FLOOR
ENHANCED ACOUSTIC BALCONY (6/F TO 50/F)
ENHANCED ACOUSTIC BALCONY (6/F TO 50/F)
ACOUSTIC BALCONY (6/F TO 26/F) BALCONY (AT 7/F, 28/F TO 50/F)
ACOUSTIC UP (6/F TO 21/F) UP (22/F TO 50/F)
ACOUSTIC UP (6/F TO 50/F)
ACOUSTIC WINDOW (7/F TO 26/F)
ACOUSTIC WINDOW (6/F TO 21/F)
M.W. (10/F TO 21/F)
M.W. (6/F TO 26/F)
M.W. (6/F TO 21/F)
M.W. (6/F TO 50/F)
ENHANCED ACOUSTIC BALCONY (6/F TO 50/F)
ENHANCED ACOUSTIC BALCONY (6/F TO 50/F)
ACOUSTIC UP (6/F TO 50/F)
ACOUSTIC WINDOW (6/F TO 50/F)
ENHANCED ACOUSTIC BALCONY (6/F TO 50/F)
ACOUSTIC UP (6/F TO 50/F)
ACOUSTIC WINDOW (6/F TO 50/F)
ACOUSTIC UP (6/F TO 50/F)
ENHANCED ACOUSTIC BALCONY (6/F TO 50/F)
ACOUSTIC UP (6/F TO 50/F)
ACOUSTIC WINDOW

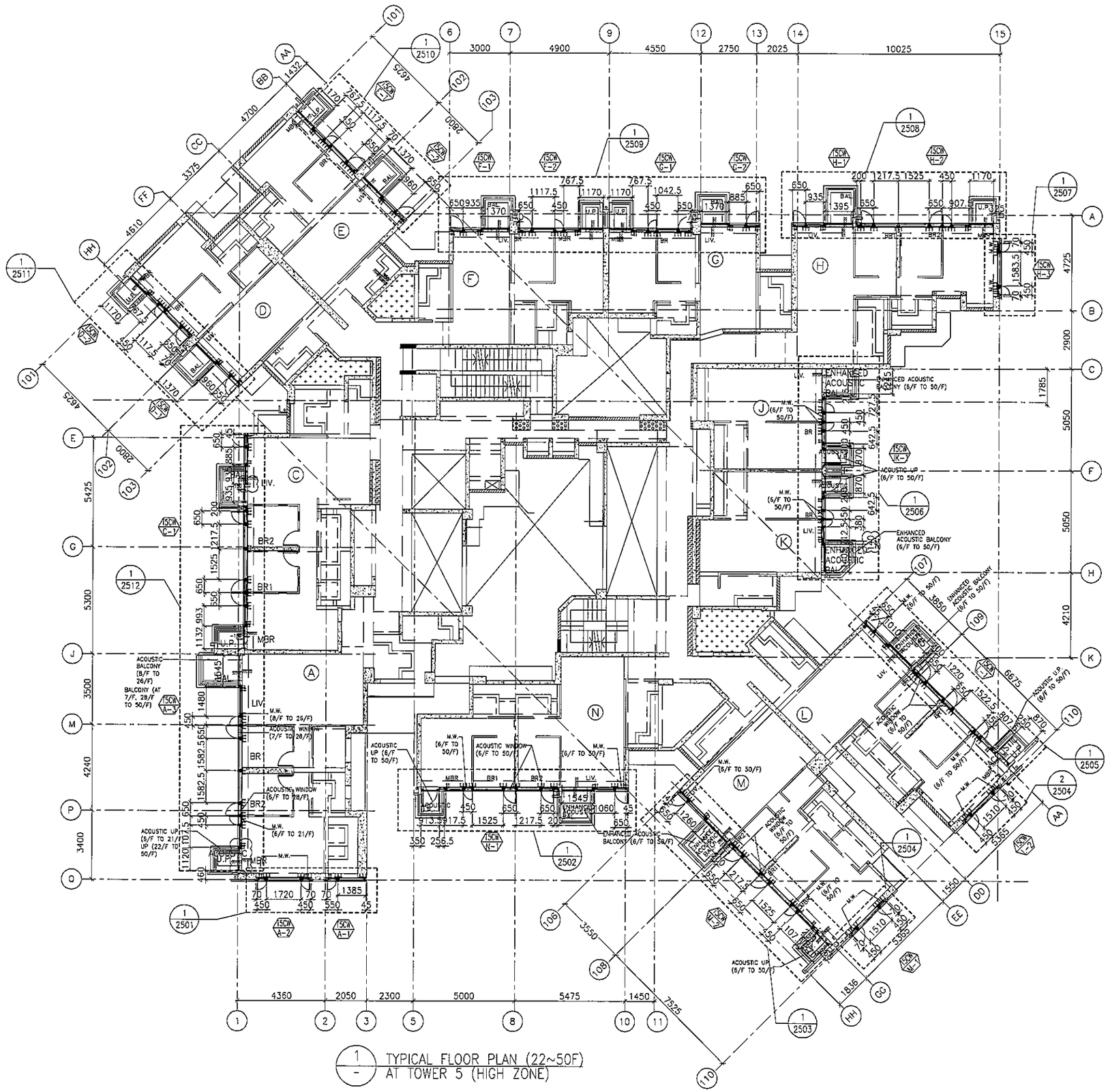

1 / - TYPICAL FLOOR PLAN (22~50F) AT TOWER 5 (HIGH ZONE)

FLOOR LEVEL (S.F.L.)(T5)

FLOOR NUMBERING	LEVEL (mPD)
22F	83.350
23F	86.500
25F	89.650
26F	92.800
28F	99.250
29F	102.250
30F	105.400
31F	108.550
32F	111.700
33F	114.850
35F	118.000
36F	121.150
37F	124.300
38F	127.450
39F	130.600
40F	133.750
41F	136.900
42F	140.050
43F	143.100
45F	146.350
46F	149.500
47F	152.650
48F	155.800
49F	158.950
50F	162.100

B.D. REF :

CLIENT :
信和置業有限公司
Sino Land Company Limited

ARCHITECT :
WONG TUNG & PARTNERS LIMITED
ARCHITECTS & PLANNERS

MAIN CONTRACTOR :
CR Construction Company Limited

STRUCTURAL ENGINEER :
AECOM

FACADE CONSULTANT:
AECOM

NOTE :
1. ALL DIMENSIONS ARE IN mm.
2. ALL ELEVATIONS ARE VIEWED FROM OUTSIDE.
3. ALL DIMENSIONS TO BE VERIFIED ON SITE BEFORE FABRICATION.

LEGEND :
X1 — DETAIL MARK NO.
X001 — REFER SHEET NO.

1. F.F.L. --FINISHED FLOOR LEVEL
2. S.F.L. --STRUCTURAL FLOOR LEVEL
3. /R --REVERSED DETAIL

NO.	DATE	REVISED	BY
E	19/01/2019	GENERAL REVISED	
D	22/12/2018	GENERAL REVISED	
C	24/11/2018	GENERAL REVISED	
B	11/10/2018	GENERAL REVISED	
A	8/10/2018	GENERAL REVISED	

JOB NO. : J-837

PROJECT :
URA KWUN TONG TOWN CENTRE REDEVELOPMENT (AREA 2 & 3) AT NKIL 6514, KWUN TONG, KWLOON

TITLE :
TYPICAL FLOOR PLAN (22~50F) OF CURTAIN WALL AT TOWER 5

DATE : 10-SEP-18 | SCALE : 1:100 (A1)

DRAWN BY : ASING | CHECKED BY : -

美特鋁質有限公司
MIDI ALUMINIUM FABRICATOR LTD.
Units 6-8, Sunray Industrial Centre, 1/F
610 Cha Kwo Ling Road, Kowloon
Tel:23489211-4 Fax:(852)27727666

DWG NO. : J837-CW-3503 | REV. : E

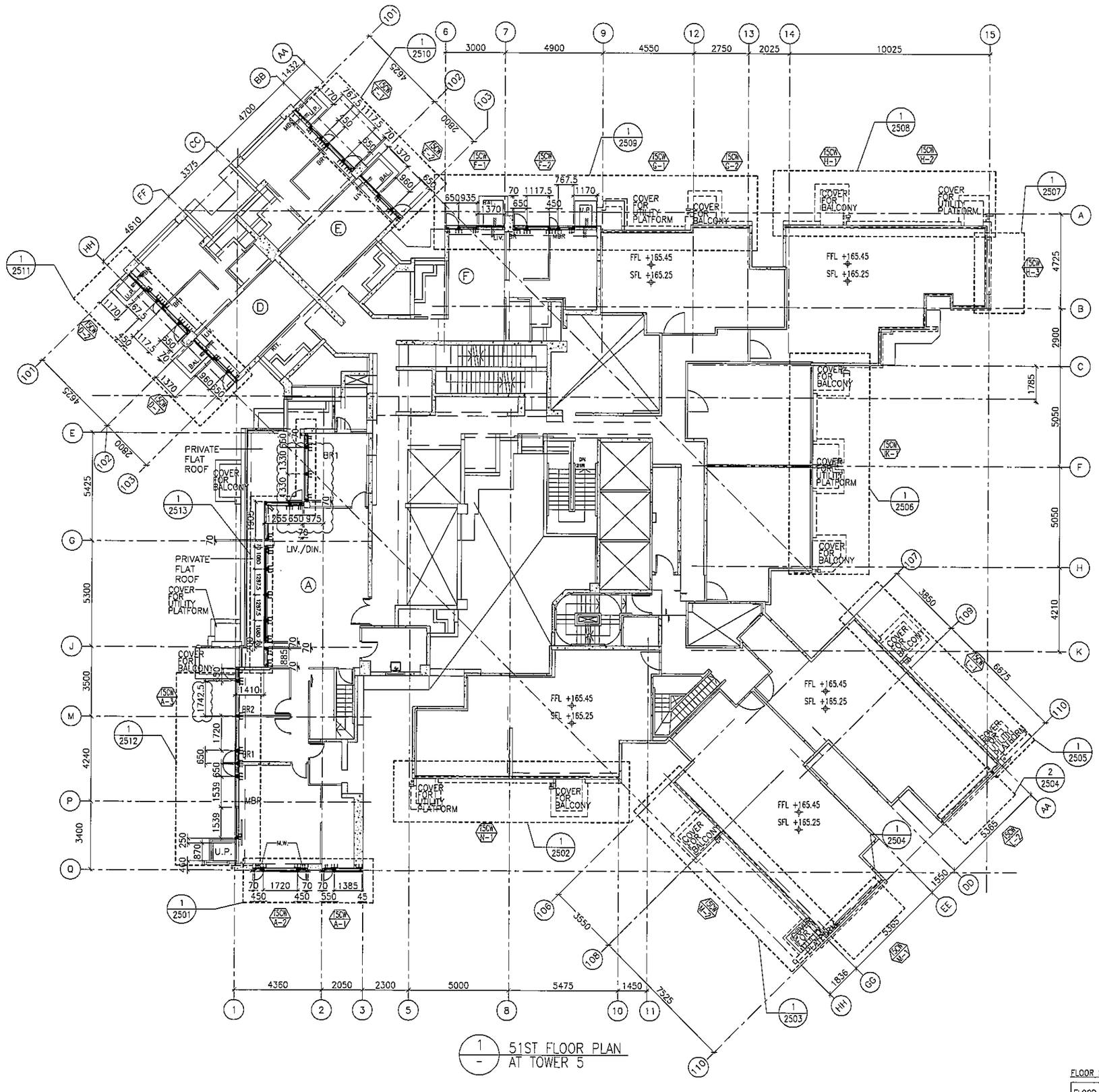

1 / - 51ST FLOOR PLAN AT TOWER 5

FLOOR LEVEL (S.F.L.)(T3)

FLOOR NUMBERING	LEVEL (mPD)
51F	+165.250/+165.550

B.D. REF :

CLIENT :
信和置業有限公司
Sino Land Company Limited

ARCHITECT :
WONG TUNG & PARTNERS LIMITED
ARCHITECTS & PLANNERS

MAIN CONTRACTOR :
CR Construction Company Limited

STRUCTURAL ENGINEER :
AECOM

FACADE CONSULTANT:
AECOM

NOTE :
1. ALL DIMENSIONS ARE IN mm.
2. ALL ELEVATIONS ARE VIEWED FROM OUTSIDE.
3. ALL DIMENSIONS TO BE VERIFIED ON SITE BEFORE FABRICATION.

LEGEND :
- X1 / XD01 — DETAIL MARK NO. / REFER SHEET NO.
1. F.F.L. --FINISHED FLOOR LEVEL
2. S.F.L. --STRUCTURAL FLOOR LEVEL
3. /R --REVERSED DETAIL

NO.	DATE	REVISED	BY
D	03/06/2019	GENERAL REVISED	
C	23/05/2019	GENERAL REVISED	
B	07/04/2019	GENERAL REVISED	
A	22/12/2018	GENERAL REVISED	

JOB NO. : J-837

PROJECT :
URA KWUN TONG TOWN CENTRE REDEVELOPMENT (AREA 2 & 3) AT NKIL 6514, KWUN TONG, KWLOON

TITLE :
51ST FLOOR PLAN OF CURTAIN WALL AT TOWER 5

DATE : 10-SEP-18 | SCALE : 1:100 (A1)

DRAWN BY : ASING | CHECKED BY : -

美特鋁質有限公司
MIDI ALUMINIUM FABRICATOR LTD.
Units 6-8, Sunray Industrial Centre, 1/F
610 Cha Kwo Ling Road, Kowloon
Tel:23489211-4 Fax:(852)27727666

DWG NO. : J837--CW-3504 | REV. : D

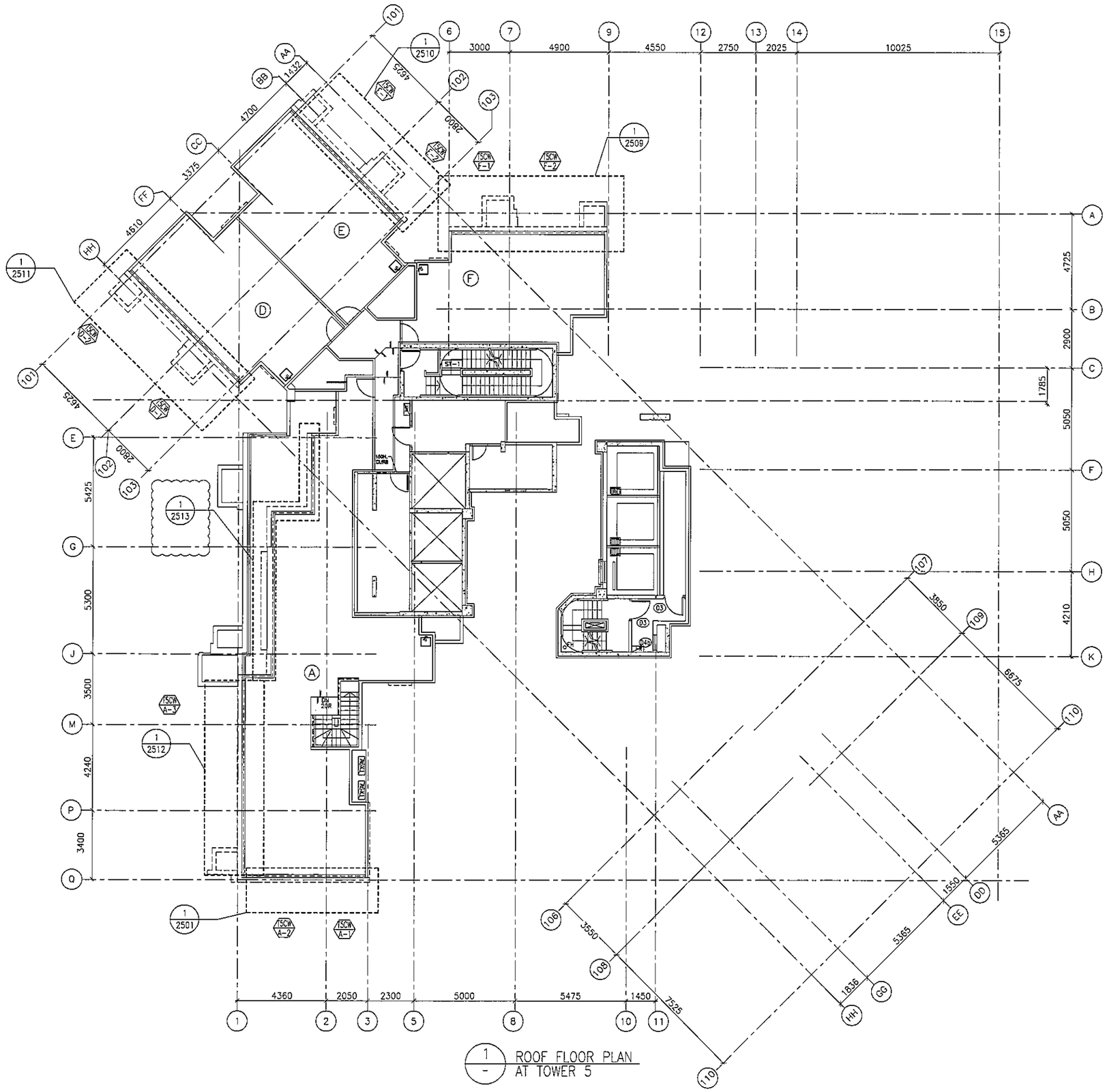

FLOOR LEVEL (S.F.L.)(T3)

FLOOR NUMBERING	LEVEL (mPD)
RF	+168.850

B.D. REF :

CLIENT :
信和置業有限公司
Sino Land Company Limited

ARCHITECT :
WONG TUNG & PARTNERS LIMITED
ARCHITECTS & PLANNERS

MAIN CONTRACTOR :
CR Construction Company Limited

STRUCTURAL ENGINEER :
AECOM

FACADE CONSULTANT:
AECOM

NOTE :
1. ALL DIMENSIONS ARE IN mm.
2. ALL ELEVATIONS ARE VIEWED FROM OUTSIDE.
3. ALL DIMENSIONS TO BE VERIFIED ON SITE BEFORE FABRICATION.

LEGEND :
X1 / X001 — DETAIL MARK NO. / REFER SHEET NO.
1. F.F.L. --FINISHED FLOOR LEVEL
2. S.F.L. --STRUCTURAL FLOOR LEVEL
3. /R --REVERSED DETAIL

NO.	DATE	REVISED	BY
B	16/07/2019	GENERAL REVISED	
A	22/12/2018	GENERAL REVISED	

JOB NO. : J-837

PROJECT :
URA KWUN TONG TOWN CENTRE REDEVELOPMENT (AREA 2 & 3) AT NKIL 6514, KWUN TONG, KWLOON

TITLE :
ROOF FLOOR PLAN OF CURTAIN WALL AT TOWER 5

DATE : 10-SEP-18	SCALE : 1:100 (A1)
DRAWN BY : ASING	CHECKED BY : -

美特鋁質有限公司
MIDI ALUMINIUM FABRICATOR LTD.
Units 6-8, Sunray Industrial Centre, 1/F
610 Cha Kwo Ling Road, Kowloon
Tel:23489211-4 Fax:(852)27727666

DWG NO. : J837-CW-3505 REV. : B

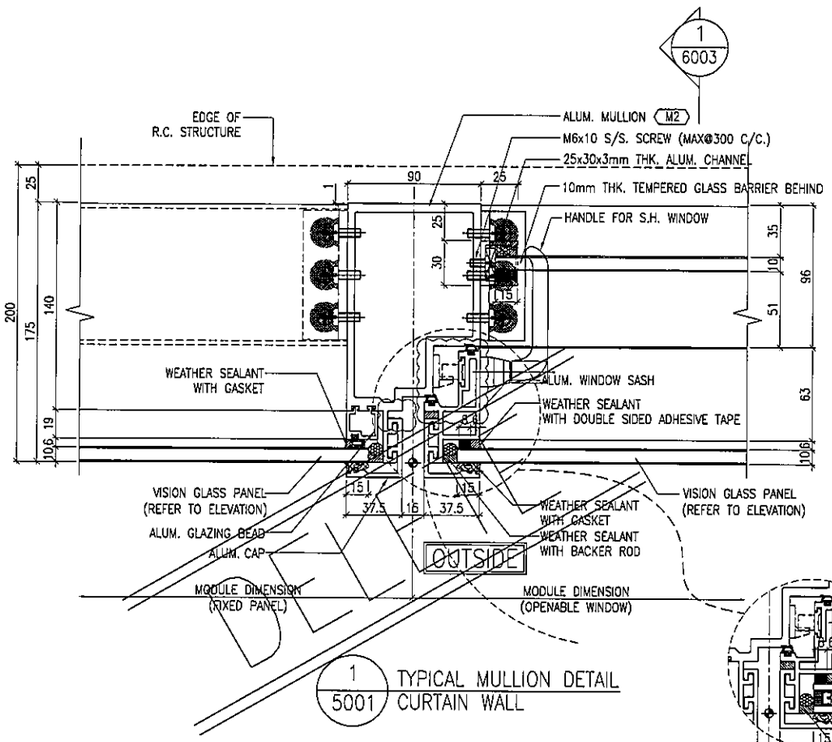

1 / 6003

1 / 5001 TYPICAL MULLION DETAIL CURTAIN WALL

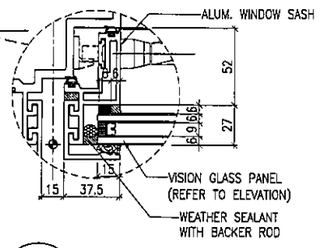

1A / 5001 TYPICAL MULLION DETAIL CURTAIN WALL

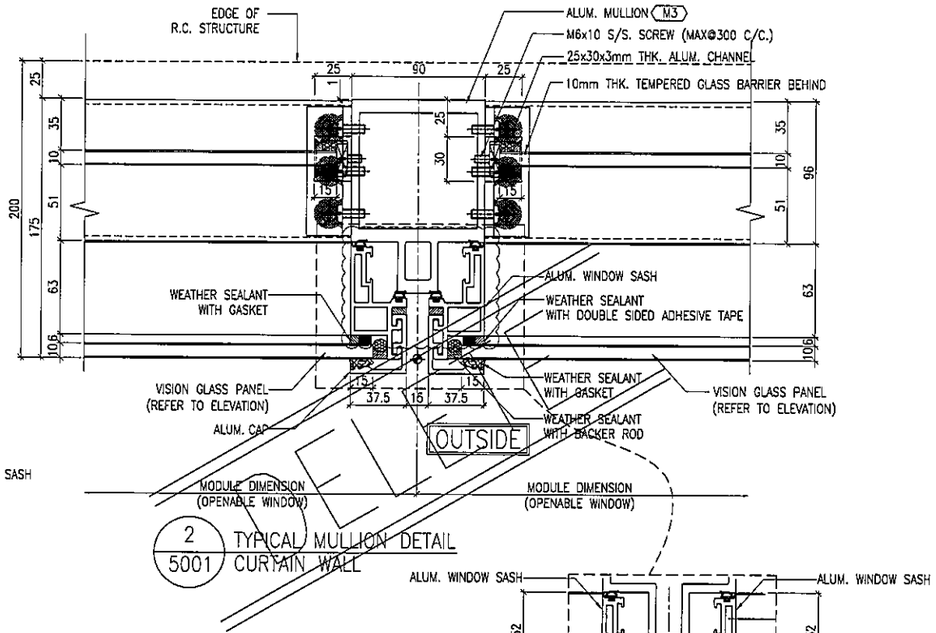

2 / 5001 TYPICAL MULLION DETAIL CURTAIN WALL

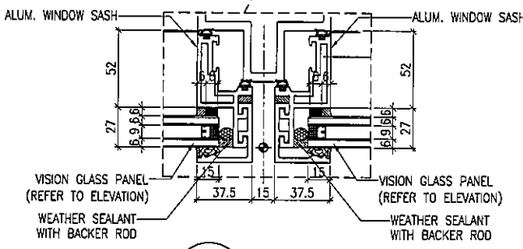

2A / 5001 TYPICAL MULLION DETAIL CURTAIN WALL

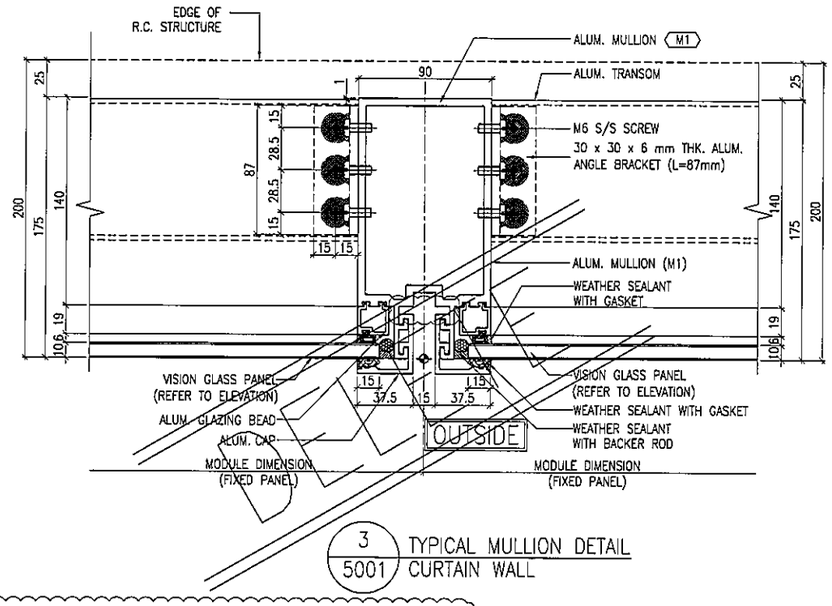

3 / 5001 TYPICAL MULLION DETAIL CURTAIN WALL

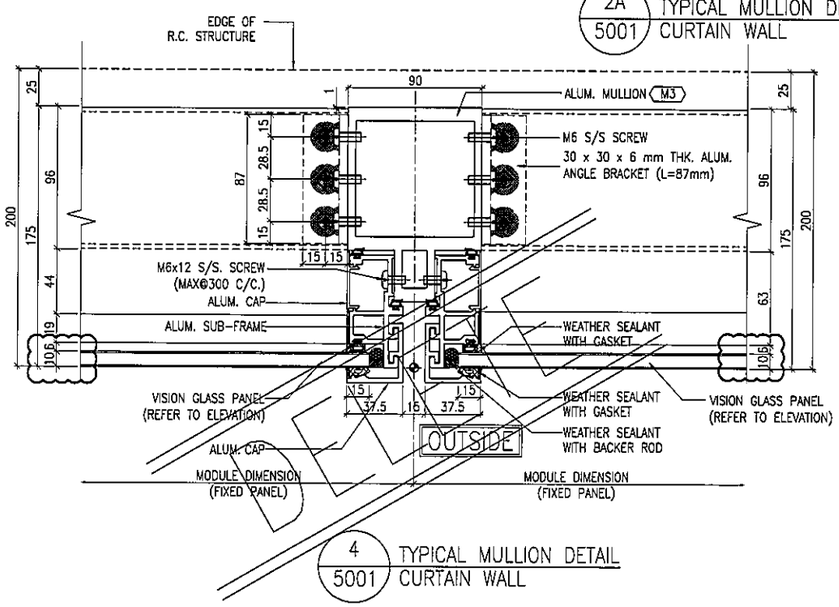

4 / 5001 TYPICAL MULLION DETAIL CURTAIN WALL

THOSE DETAILS WILL SAME AS 5002, BECAUSE GLASS WILL CHANGE TO IGU GLASS.

B.D. REF :

CLIENT :
信和置業有限公司
Sino Land Company Limited

ARCHITECT :
WONG TUNG & PARTNERS LIMITED
ARCHITECTS & PLANNERS

MAIN CONTRACTOR :
CR Construction Company Limited

STRUCTURAL ENGINEER :
AECOM

FACADE CONSULTANT:
AECOM

NOTE :
1. ALL DIMENSIONS ARE IN mm.
2. ALL ELEVATIONS ARE VIEWED FROM OUTSIDE.
3. ALL DIMENSIONS TO BE VERIFIED ON SITE BEFORE FABRICATION.

LEGEND :
X1 / X001 — DETAIL MARK NO. / REFER SHEET NO.
1. F.F.L. --FINISHED FLOOR LEVEL
2. S.F.L. --STRUCTURAL FLOOR LEVEL
3. (R) --REVERSED DETAIL

NO.	DATE	REVISED	BY
B	24/11/2018	GENERAL REVISED	
A	10/9/2018	GENERAL REVISED	

JOB NO. : J-837

PROJECT :
URA KWUN TONG TOWN CENTRE REDEVELOPMENT (AREA 2 & 3) AT NKIL 6514, KWUN TONG, KWLOON

TITLE :
TYPICAL MULLION DETAIL FOR CURTAIN WALL

DATE : 13-JUL-18 | SCALE : 1:2 (A1)

DRAWN BY : ASING | CHECKED BY : -

美特鋁質有限公司
MIDI ALUMINIUM FABRICATOR LTD.
Units 6-8, Sunray Industrial Centre, 1/F
610 Cha Kwo Ling Road, Kowloon
Tel:23489211-4 Fax:(852)27727666

DWG NO. : J837-CW-5001 | REV. : B

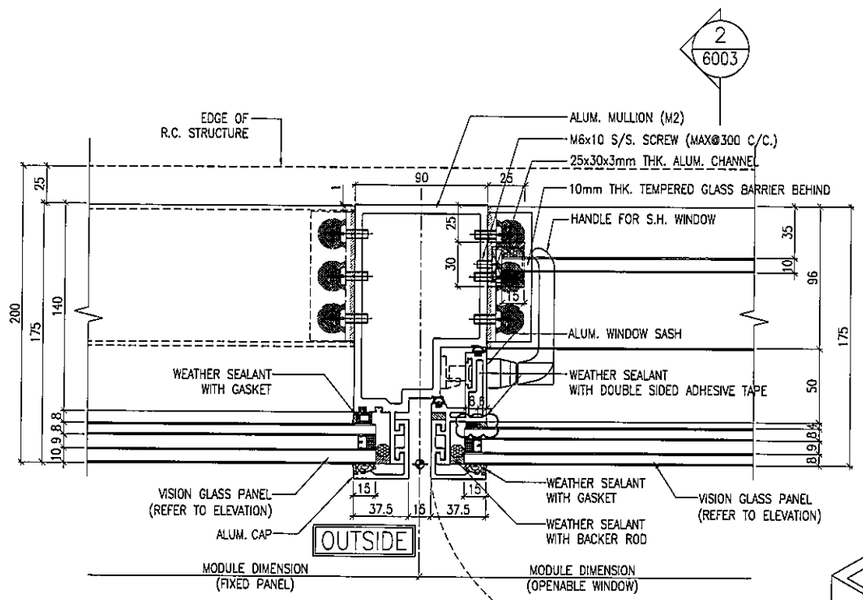

1 / 5002 TYPICAL MULLION DETAIL CURTAIN WALL

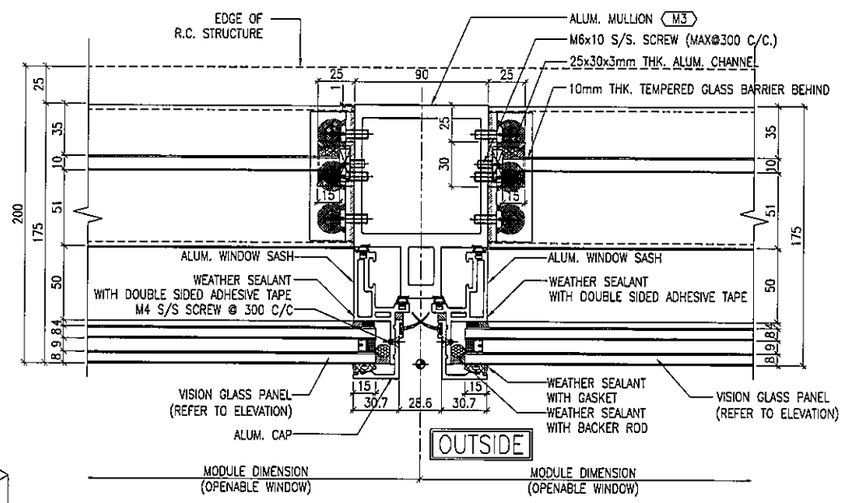

2 / 5002 TYPICAL MULLION DETAIL CURTAIN WALL

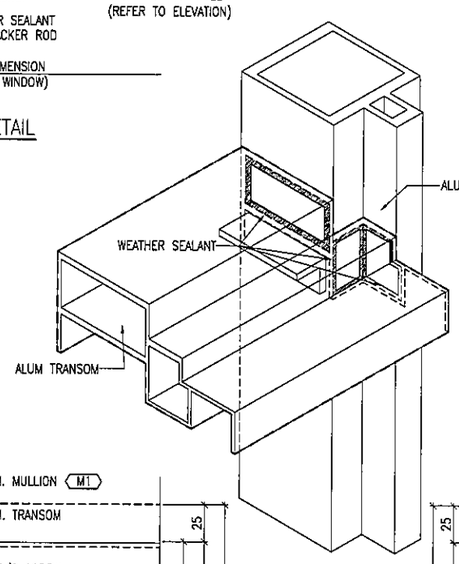

CONNETION BETWEEN MULLION AND TRAMSOM
WITH WEATHER SEALANT.(APPLY ON ALL MULLION
AND TRANSOM CONNETION)

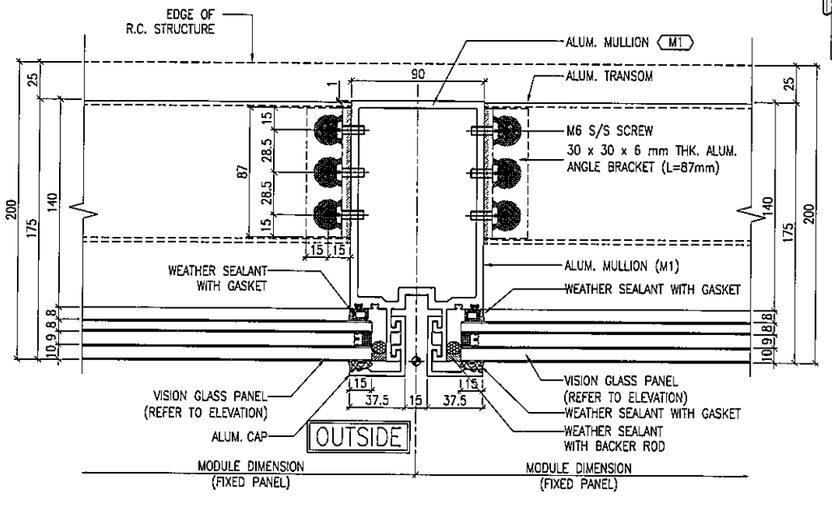

3 / 5002 TYPICAL MULLION DETAIL CURTAIN WALL

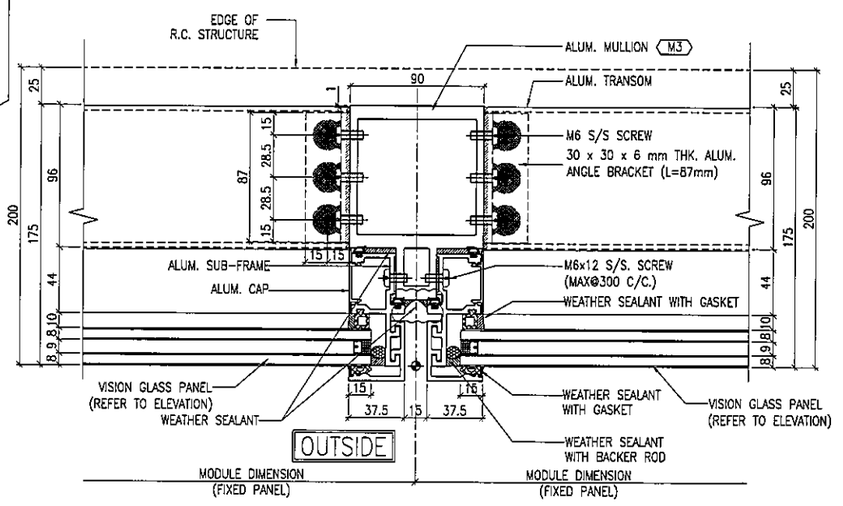

4 / 5002 TYPICAL MULLION DETAIL CURTAIN WALL

B.O. REF :

CLIENT :
信和置業有限公司
Sino Land Company Limited

ARCHITECT :
WONG TUNG & PARTNERS LIMITED
ARCHITECTS & PLANNERS

MAIN CONTRACTOR :
CR Construction Company Limited

STRUCTURAL ENGINEER :
AECOM

FACADE CONSULTANT:
AECOM

NOTE :
1. ALL DIMENSIONS ARE IN mm.
2. ALL ELEVATIONS ARE VIEWED FROM OUTSIDE.
3. ALL DIMENSIONS TO BE VERIFIED ON SITE BEFORE FABRICATION.

LEGEND :
X1 — DETAIL MARK NO.
X001 — REFER SHEET NO.

1. F.F.L. --FINISHED FLOOR LEVEL
2. S.F.L. --STRUCTURAL FLOOR LEVEL
3. (R) --REVERSED DETAIL

NO.	DATE	REVISED	BY
D	15/8/2019	GENERAL REVISED	
C	22/12/2018	GENERAL REVISED	
B	24/11/2018	GENERAL REVISED	
A	10/9/2018	GENERAL REVISED	

JOB NO. : J-837

PROJECT :
URA KWUN TONG TOWN CENTRE
REDEVELOPMENT (AREA 2 & 3) AT
NKIL 6514, KWUN TONG, KWLOON

TITLE :
TYPICAL MULLION DETAIL
FOR CURTAIN WALL

DATE : 13-JUL-18 | SCALE : 1:2 (A1)

DRAWN BY : ASING | CHECKED BY : -

美特鋁製有限公司
MIDI ALUMINIUM FABRICATOR LTD.
Units 6-8, Sunray Industrial Centre, 1/F
610 Cha Kwo Ling Road, Kowloon
Tel:23489211-4 Fax:(852)27727666

DWG NO. : J837-CW-5002 | REV. : D

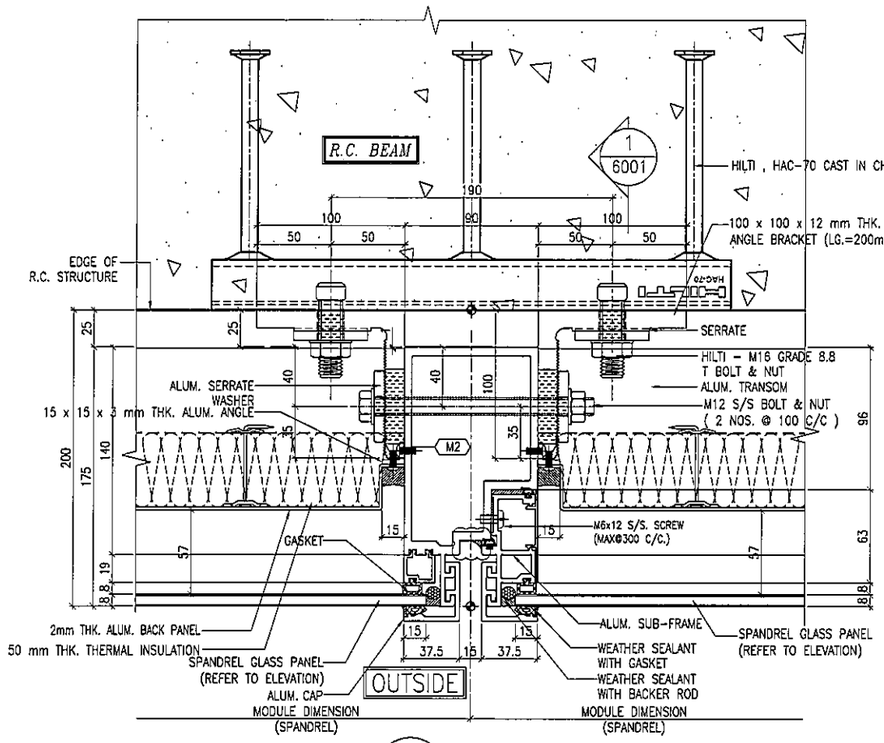

1 / 5003 TYPICAL MULLION DETAIL CURTAIN WALL

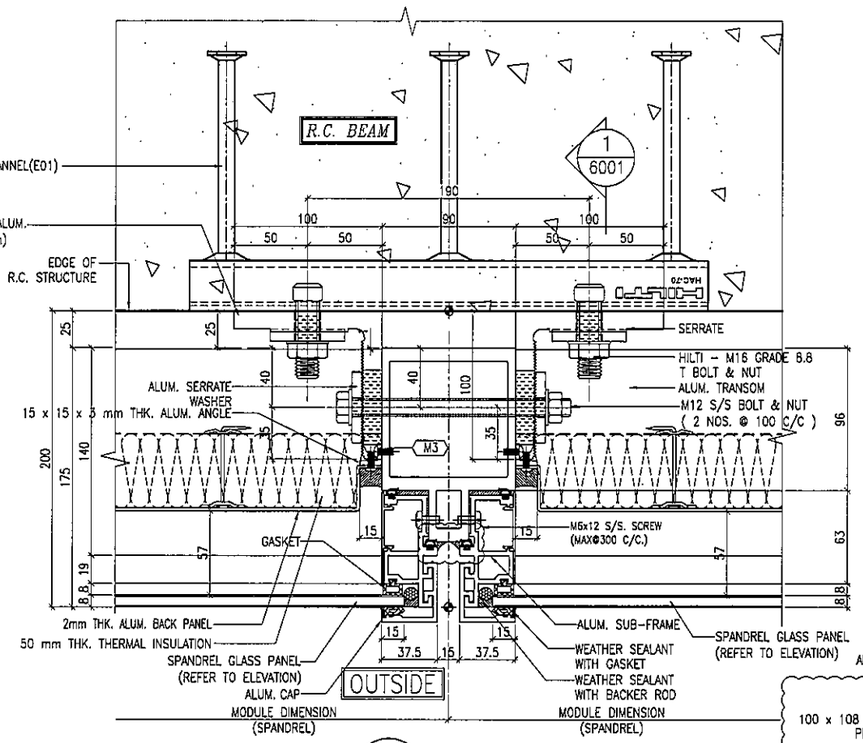

2 / 5003 TYPICAL MULLION DETAIL CURTAIN WALL

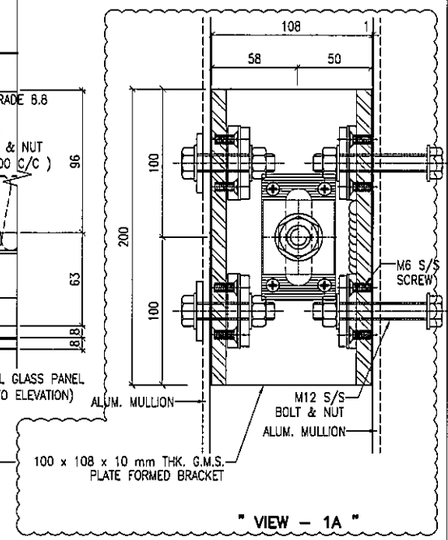

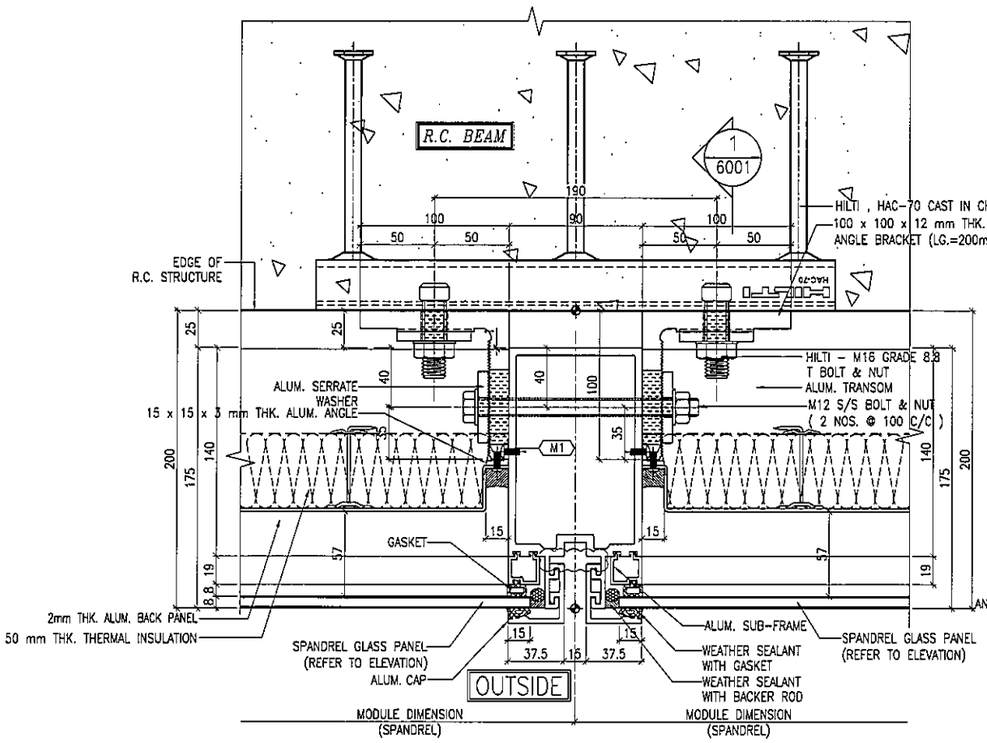

3 / 5003 TYPICAL MULLION DETAIL CURTAIN WALL

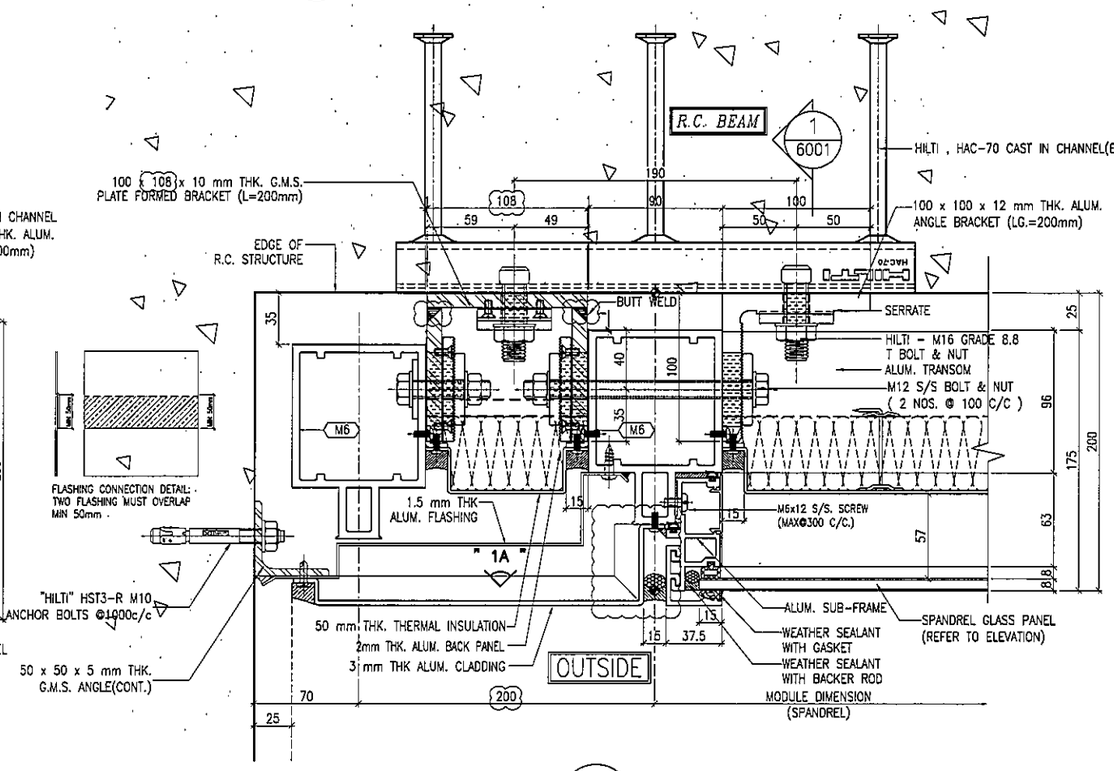

4 / 5003 TYPICAL MULLION DETAIL CURTAIN WALL

B.D. REF :

CLIENT : 信和置業有限公司 Sino Land Company Limited

ARCHITECT : WONG TUNG & PARTNERS LIMITED ARCHITECTS & PLANNERS

MAIN CONTRACTOR : CR Construction Company Limited

STRUCTURAL ENGINEER : AECOM

FACADE CONSULTANT: AECOM

NOTE :
1. ALL DIMENSIONS ARE IN mm.
2. ALL ELEVATIONS ARE VIEWED FROM OUTSIDE.
3. ALL DIMENSIONS TO BE VERIFIED ON SITE BEFORE FABRICATION.

LEGEND :

X1 / X001 — DETAIL MARK NO. / REFER SHEET NO.

1. F.F.L. --FINISHED FLOOR LEVEL
2. S.F.L. --STRUCTURAL FLOOR LEVEL
3. (R) --REVERSED DETAIL

NO.	DATE	REVISED	BY
C	19/05/2019	GENERAL REVISED	
B	24/11/2018	GENERAL REVISED	
A	10/9/2018	GENERAL REVISED	

JOB NO. : J-837

PROJECT : URA KWUN TONG TOWN CENTRE REDEVELOPMENT (AREA 2 & 3) AT NKIL 6514, KWUN TONG, KWLOON

TITLE : TYPICAL MULLION DETAIL FOR CURTAIN WALL

DATE : 13-JUL-18 | SCALE : 1:2 (A1)

DRAWN BY : ASING | CHECKED BY : -

美特鋁質有限公司 MIDI ALUMINIUM FABRICATOR LTD.
Units 6-8, Sunray Industrial Centre, 1/F
610 Cha Kwo Ling Road, Kowloon
Tel:23489211-4 Fax:(852)27727666

DWG NO. : J837-CW-5003 | REV. : C

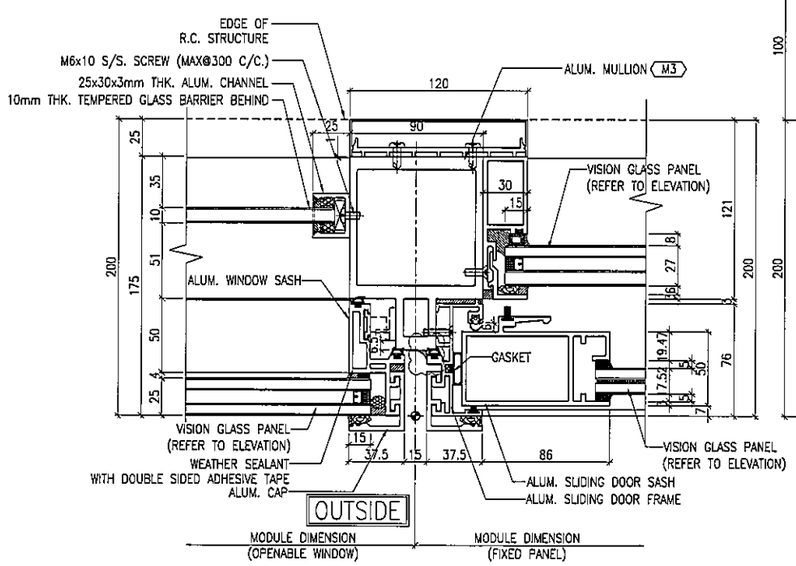

1 / 5004 TYPICAL MULLION DETAIL CURTAIN WALL

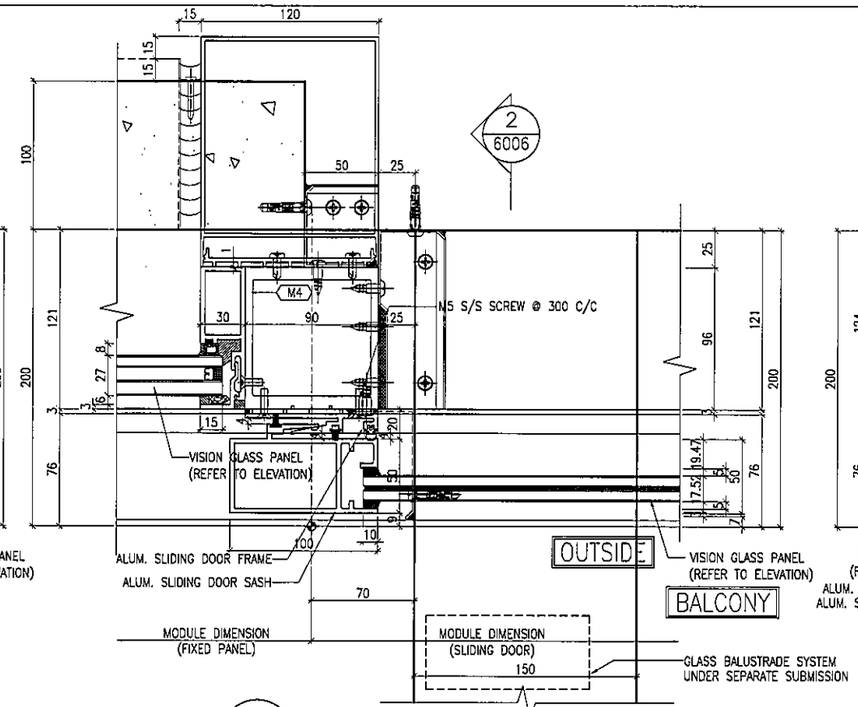

2 / 5004 TYPICAL MULLION DETAIL CURTAIN WALL

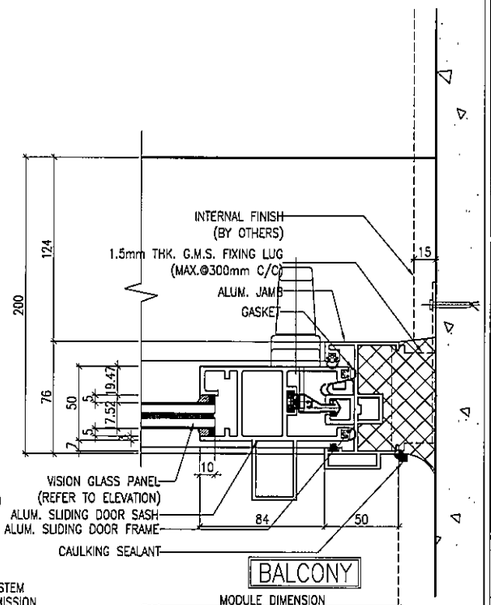

3 / 5004 TYPICAL MULLION DETAIL CURTAIN WALL

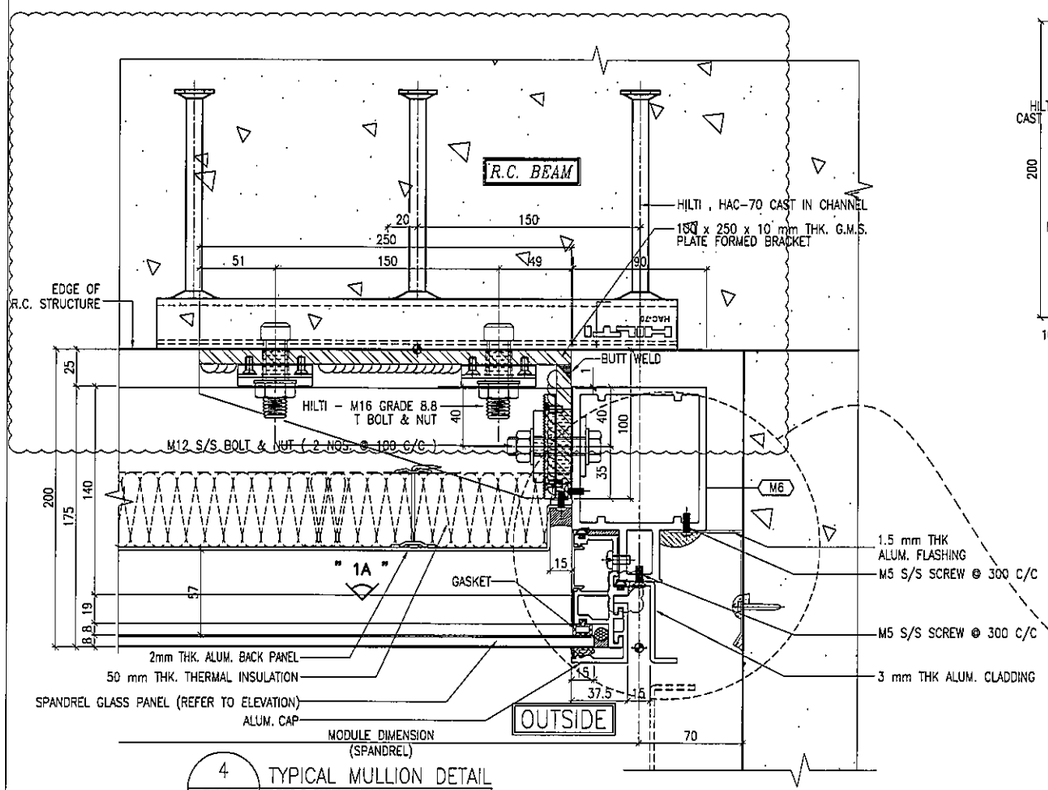

4 / 5004 TYPICAL MULLION DETAIL CURTAIN WALL

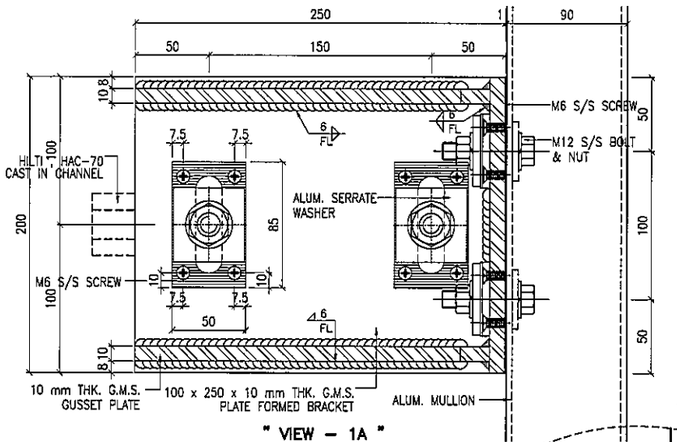

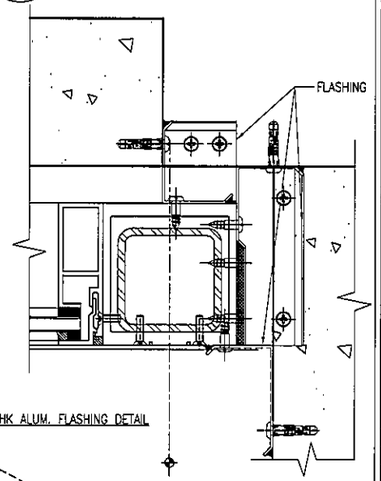

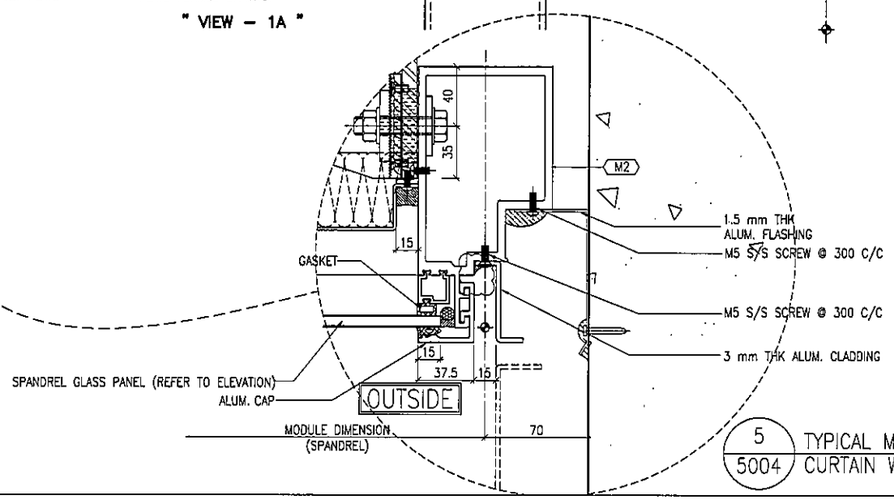

5 / 5004 TYPICAL MULLION DETAIL CURTAIN WALL

B.D. REF :

CLIENT : 信和置業有限公司 Sino Land Company Limited

ARCHITECT : WONG TUNG & PARTNERS LIMITED ARCHITECTS & PLANNERS

MAIN CONTRACTOR : CR Construction Company Limited

STRUCTURAL ENGINEER : AECOM

FACADE CONSULTANT: AECOM

NOTE :
1. ALL DIMENSIONS ARE IN mm.
2. ALL ELEVATIONS ARE VIEWED FROM OUTSIDE.
3. ALL DIMENSIONS TO BE VERIFIED ON SITE BEFORE FABRICATION.

LEGEND :
- X1 / X001 — DETAIL MARK NO. / REFER SHEET NO.
1. F.F.L. --FINISHED FLOOR LEVEL
2. S.F.L. --STRUCTURAL FLOOR LEVEL
3. /R --REVERSED DETAIL

NO.	DATE	REVISED	BY
E	31/01/2019	GENERAL REVISED	
D	22/12/2018	GENERAL REVISED	
C	04/12/2018	GENERAL REVISED	
B	24/11/2018	GENERAL REVISED	
A	10/9/2018	GENERAL REVISED	

JOB NO. : J-837

PROJECT : URA KWUN TONG TOWN CENTRE REDEVELOPMENT (AREA 2 & 3) AT NKIL 6514, KWUN TONG, KWLOON

TITLE : TYPICAL MULLION DETAIL FOR CURTAIN WALL

DATE : 13-JUL-18 | SCALE : 1:2 (A1)

DRAWN BY : ASING | CHECKED BY : -

美特鋁製有限公司 MIDI ALUMINIUM FABRICATOR LTD.
Units 6-8, Sunray Industrial Centre, 1/F
610 Cha Kwo Ling Road, Kowloon
Tel:23489211-4 Fax:(852)27727666

DWG NO. : J837-CW-5004 | REV. : E

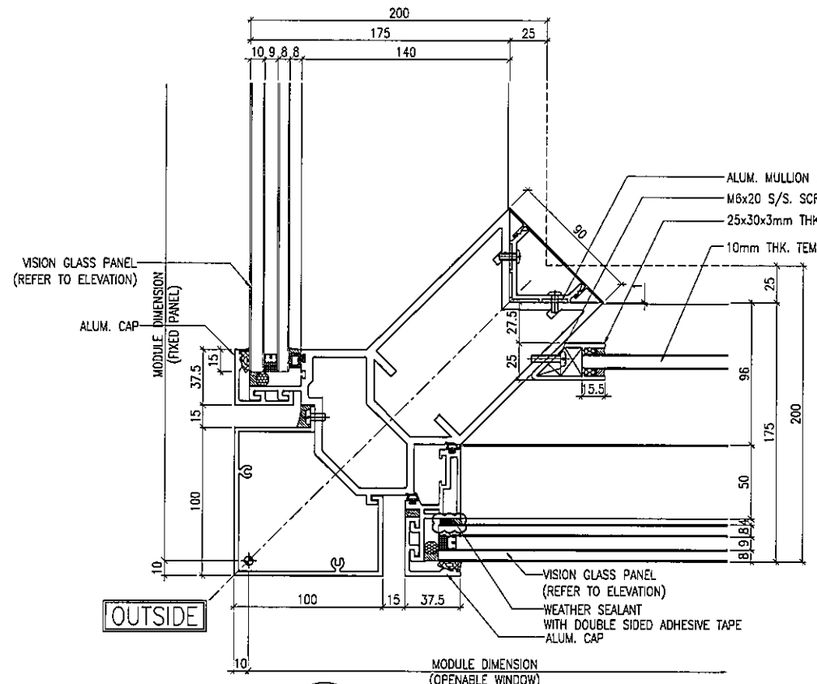

1 / 5005 TYPICAL MULLION DETAIL CURTAIN WALL

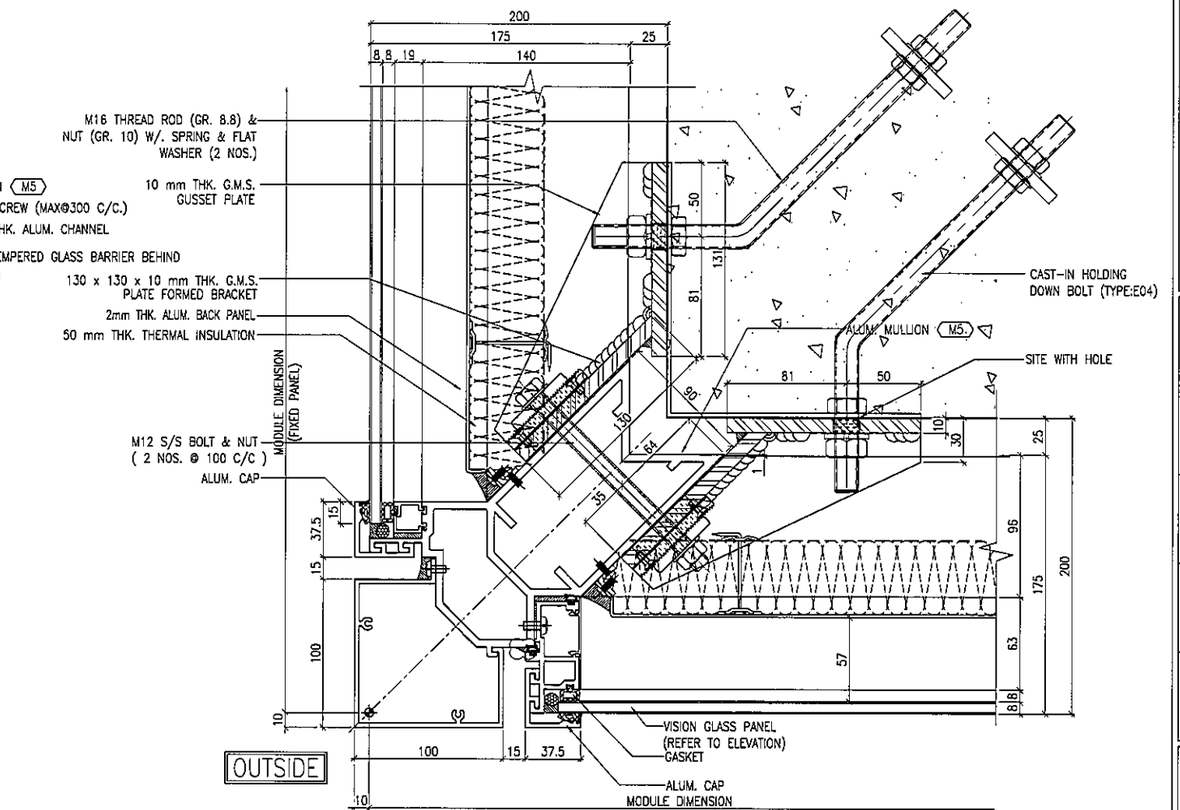

2 / 5005 TYPICAL MULLION DETAIL CURTAIN WALL

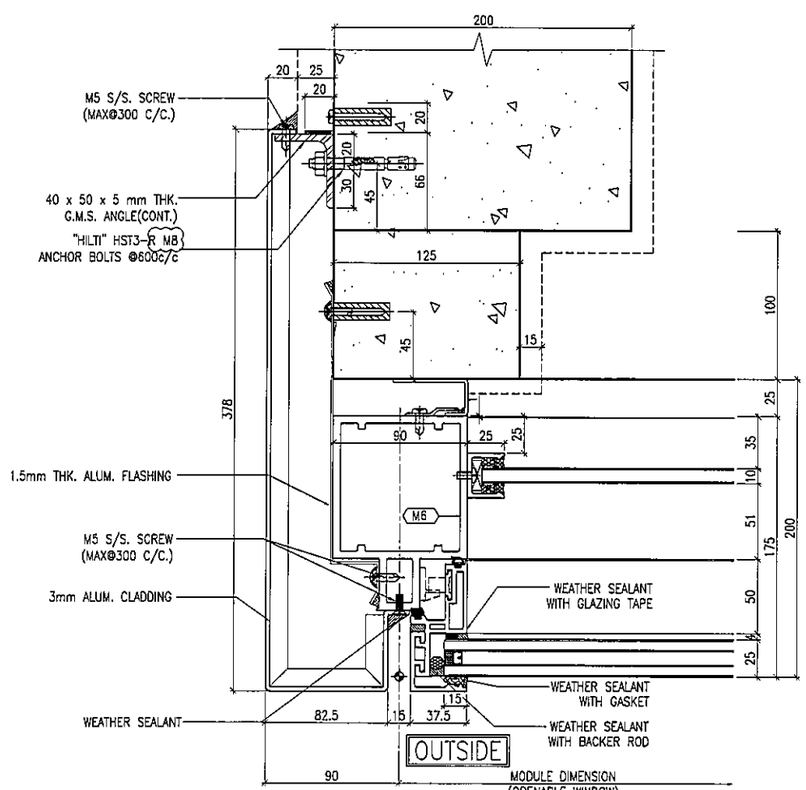

3 / 5005 TYPICAL MULLION DETAIL CURTAIN WALL

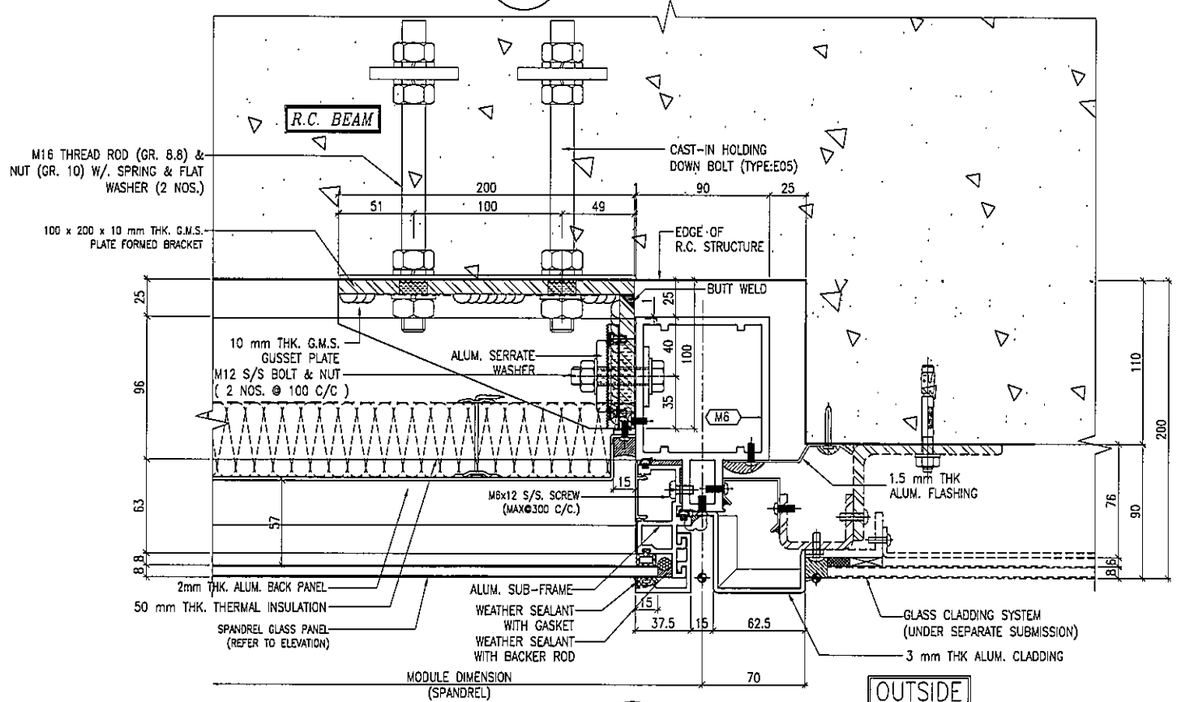

4 / 5005 TYPICAL MULLION DETAIL CURTAIN WALL

B.D. REF :

CLIENT :
信和置業有限公司
Sino Land Company Limited

ARCHITECT :
WONG TUNG & PARTNERS LIMITED
ARCHITECTS & PLANNERS

MAIN CONTRACTOR :
CR Construction Company Limited

STRUCTURAL ENGINEER :
AECOM

FACADE CONSULTANT:
AECOM

NOTE :
1. ALL DIMENSIONS ARE IN mm.
2. ALL ELEVATIONS ARE VIEWED FROM OUTSIDE.
3. ALL DIMENSIONS TO BE VERIFIED ON SITE BEFORE FABRICATION.

LEGEND :
X1 / X001 — DETAIL MARK NO. / REFER SHEET NO.
1. F.F.L. --FINISHED FLOOR LEVEL
2. S.F.L. --STRUCTURAL FLOOR LEVEL
3. (R) --REVERSED DETAIL

NO.	DATE	REVISED	BY
F	12/05/2019	GENERAL REVISED	
E	06/05/2019	GENERAL REVISED	
D	09/01/2019	GENERAL REVISED	
C	22/12/2018	GENERAL REVISED	
B	24/11/2018	GENERAL REVISED	
A	10/9/2018	GENERAL REVISED	

JOB NO. : J-837

PROJECT :
URA KWUN TONG TOWN CENTRE REDEVELOPMENT (AREA 2 & 3) AT NKIL 6514, KWUN TONG, KWLOON

TITLE :
TYPICAL MULLION DETAIL FOR CURTAIN WALL

DATE : 13-JUL-18 | SCALE : 1:2 (A1)

DRAWN BY : ASING | CHECKED BY : -

美特鋁製有限公司
MIDI ALUMINIUM FABRICATOR LTD.
Units 6-8, Sunray Industrial Centre, 1/F
610 Cha Kwo Ling Road, Kowloon
Tel:23489211-4 Fax:(852)27727686

DWG NO. : J837-CW-5005 | REV. : F

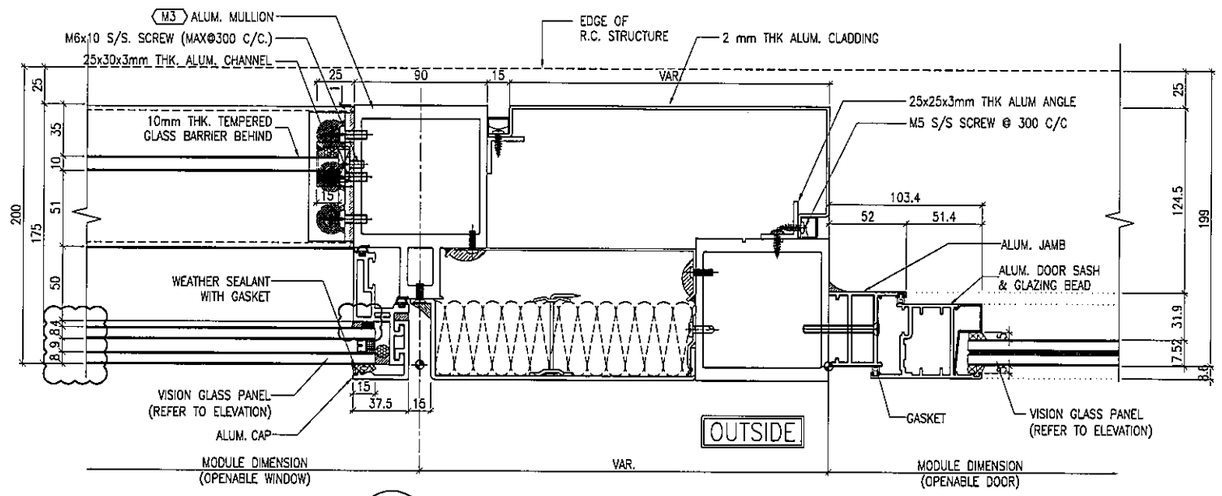

1 / 5006 TYPICAL MULLION DETAIL CURTAIN WALL

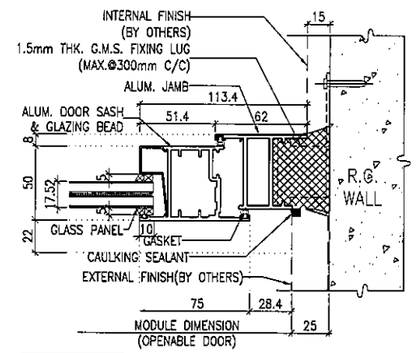

2 / 5006 TYPICAL MULLION DETAIL CURTAIN WALL

4 / 5006

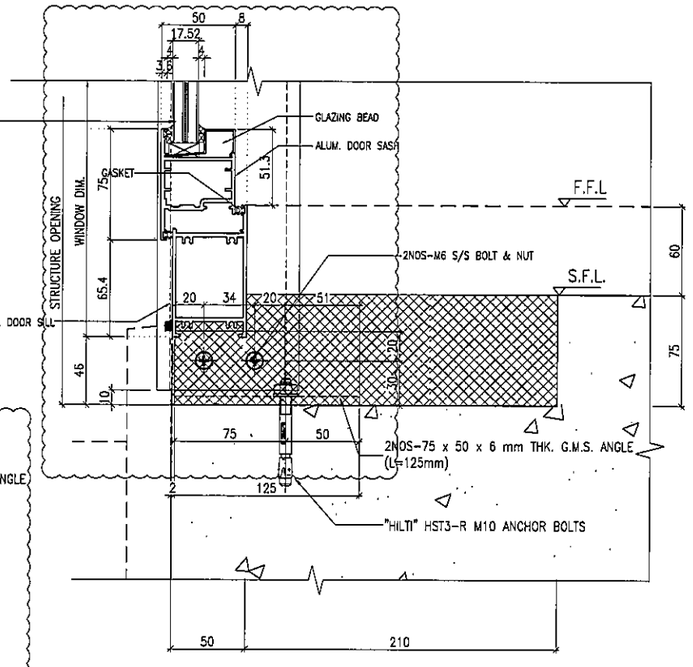

4 / 5006 TYPICAL TRANSOM DETAIL CURTAIN WALL

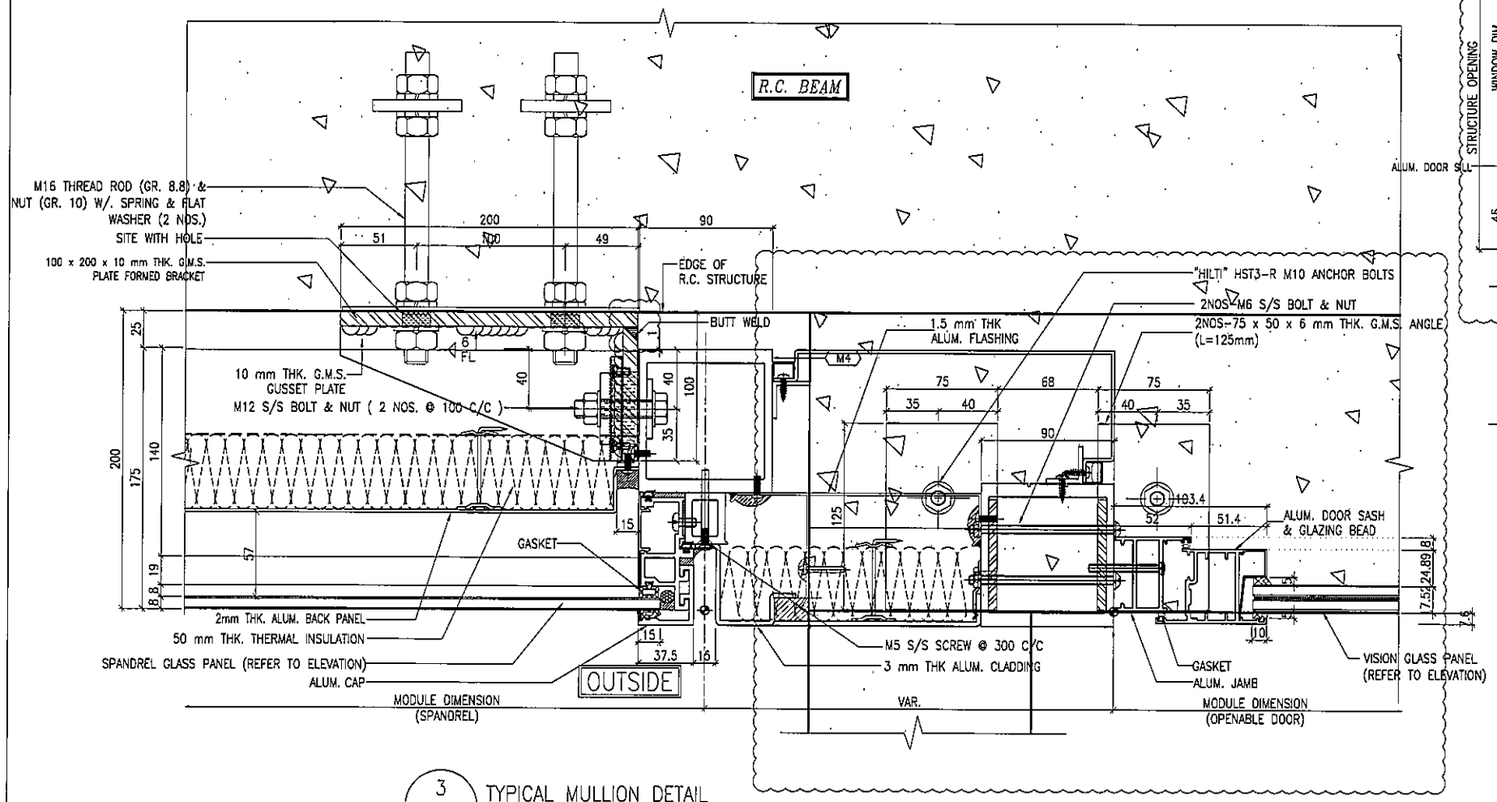

3 / 5006 TYPICAL MULLION DETAIL CURTAIN WALL

B.D. REF :

CLIENT :
信和置業有限公司
Sino Land Company Limited

ARCHITECT :
WONG TUNG & PARTNERS LIMITED
ARCHITECTS & PLANNERS

MAIN CONTRACTOR :
CR Construction Company Limited

STRUCTURAL ENGINEER :
AECOM

FACADE CONSULTANT:
AECOM

NOTE :
1. ALL DIMENSIONS ARE IN mm.
2. ALL ELEVATIONS ARE VIEWED FROM OUTSIDE.
3. ALL DIMENSIONS TO BE VERIFIED ON SITE BEFORE FABRICATION.

LEGEND :
(X1 / X001) — DETAIL MARK NO. / REFER SHEET NO.
1. F.F.L. --FINISHED FLOOR LEVEL
2. S.F.L. --STRUCTURAL FLOOR LEVEL
3. (/R) --REVERSED DETAIL

NO.	DATE	REVISED	BY
E	15/02/2019	GENERAL REVISED	
D	31/01/2019	GENERAL REVISED	
C	22/12/2018	GENERAL REVISED	
B	24/11/2018	GENERAL REVISED	
A	10/9/2018	GENERAL REVISED	

JOB NO. : J-837

PROJECT :
URA KWUN TONG TOWN CENTRE REDEVELOPMENT (AREA 2 & 3) AT NKIL 6514, KWUN TONG, KWLOON

TITLE :
TYPICAL MULLION DETAIL FOR CURTAIN WALL

DATE : 13-JUL-18 | SCALE : 1:2 (A1)

DRAWN BY : ASING | CHECKED BY : -

美特鋁製有限公司
MIDI ALUMINIUM FABRICATOR LTD.
Units 6-8, Sunray Industrial Centre, 1/F
610 Cha Kwo Ling Road, Kowloon
Tel:23489211-4 Fax:(852)27727666

DWG NO. : J837-CW-5006 | REV. : E

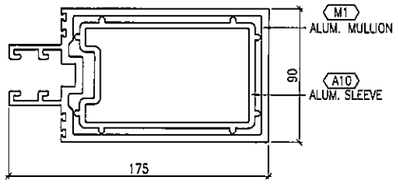

" VIEW – '1B "

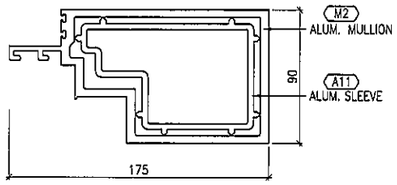

" VIEW – '2B "

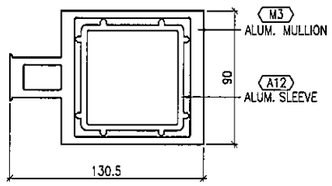

" VIEW – '3B "

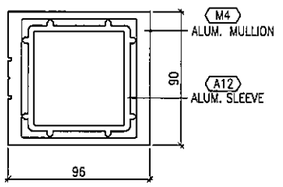

" VIEW – '4B "

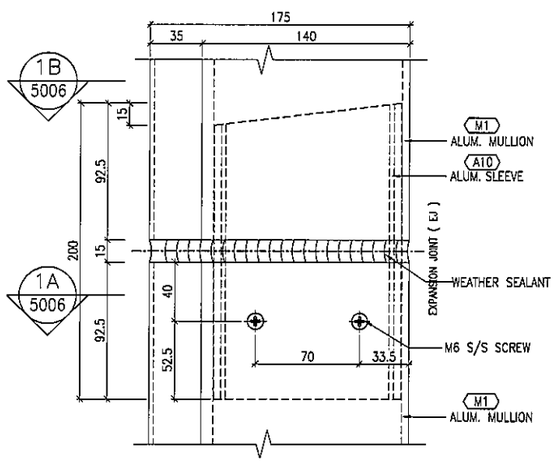

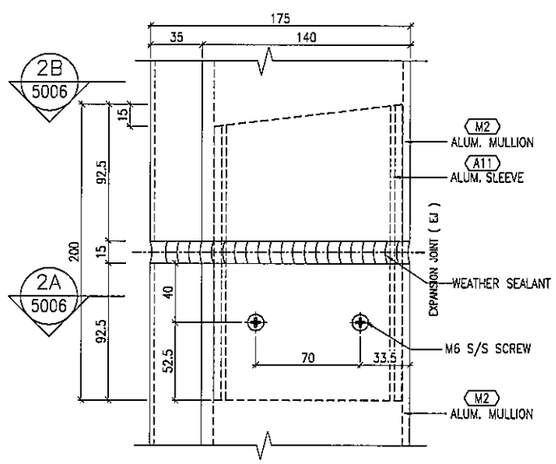

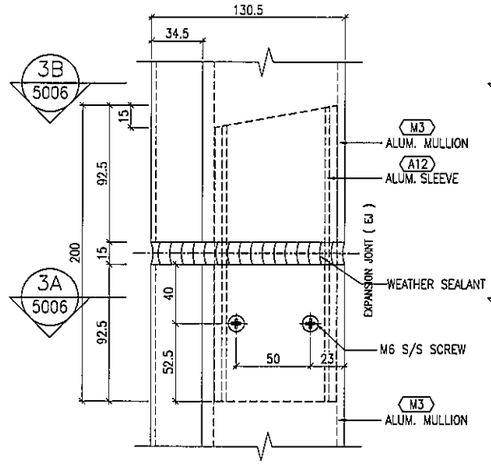

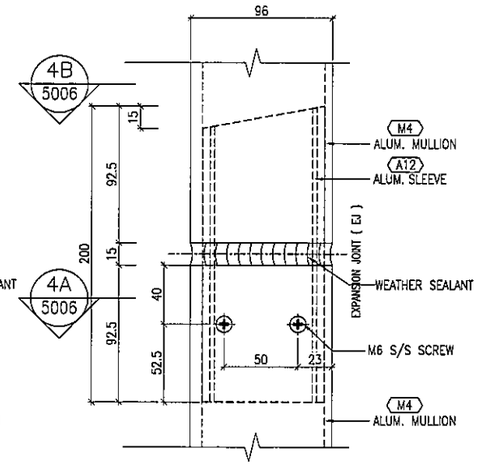

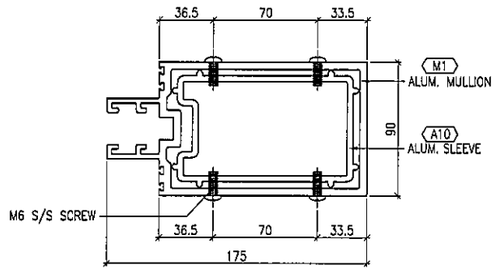

" VIEW – 1A "

" ALUMINIUM CURTAIN WALL SLEEVE "
– TYPICAL FIXING DETAIL

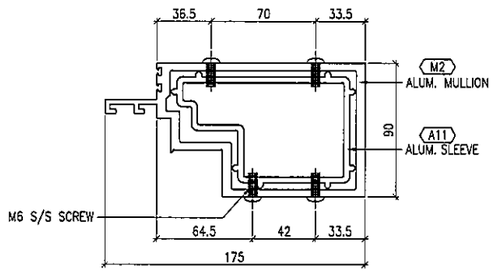

" VIEW – 2A "

" ALUMINIUM CURTAIN WALL SLEEVE "
– TYPICAL FIXING DETAIL

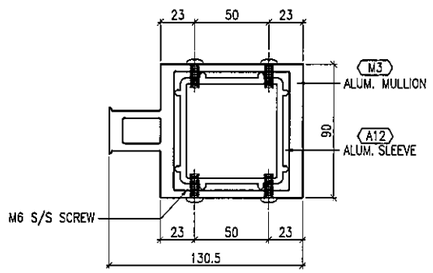

" VIEW – 3A "

" ALUMINIUM CURTAIN WALL SLEEVE "
– TYPICAL FIXING DETAIL

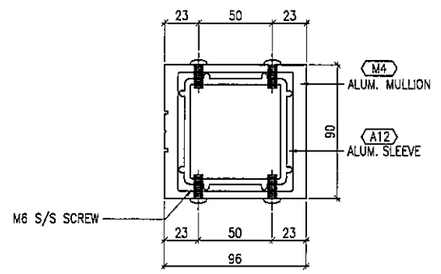

" VIEW – 4A "

" ALUMINIUM CURTAIN WALL SLEEVE "
– TYPICAL FIXING DETAIL

1 / 5007 TYPICAL MULLION DETAIL CURTAIN WALL

2 / 5007 TYPICAL MULLION DETAIL CURTAIN WALL

3 / 5007 TYPICAL MULLION DETAIL CURTAIN WALL

4 / 5007 TYPICAL MULLION DETAIL CURTAIN WALL

B.D. REF :

CLIENT :
信和置業有限公司
Sino Land Company Limited

ARCHITECT :
WONG TUNG & PARTNERS LIMITED
ARCHITECTS & PLANNERS

MAIN CONTRACTOR :
CR Construction Company Limited

STRUCTURAL ENGINEER :
AECOM

FACADE CONSULTANT:
AECOM

NOTE :
1. ALL DIMENSIONS ARE IN mm.
2. ALL ELEVATIONS ARE VIEWED FROM OUTSIDE.
3. ALL DIMENSIONS TO BE VERIFIED ON SITE BEFORE FABRICATION.

LEGEND :
X1 / X001 — DETAIL MARK NO. / REFER SHEET NO.
1. F.F.L. --FINISHED FLOOR LEVEL
2. S.F.L. --STRUCTURAL FLOOR LEVEL
3. /R --REVERSED DETAIL

NO.	DATE	REVISED	BY

JOB NO. : J-837

PROJECT :
URA KWUN TONG TOWN CENTRE REDEVELOPMENT (AREA 2 & 3) AT NKIL 6514, KWUN TONG, KWLOON

TITLE :
TYPICAL MULLION DETAIL FOR CURTAIN WALL

DATE : 13-JUL-18 | SCALE : 1:2 (A1)

DRAWN BY : ASING | CHECKED BY : –

美特鋁製有限公司
MIDI ALUMINIUM FABRICATOR LTD.
Units 6-8, Sunray Industrial Centre, 1/F
610 Cha Kwo Ling Road, Kowloon
Tel:23489211-4 Fax:(852)27727666

DWG NO. : J837-CW-5007 | REV. : –

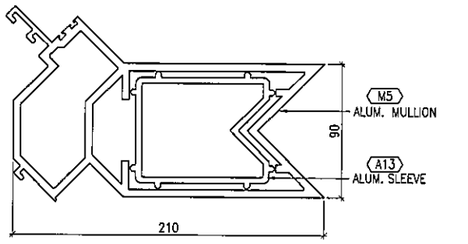

" VIEW – '1B "

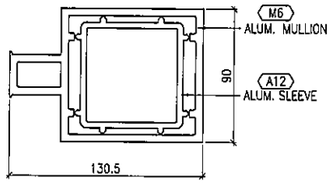

" VIEW – '2B "

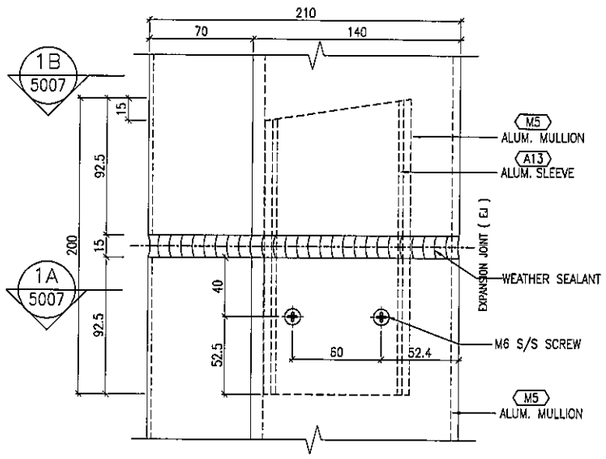

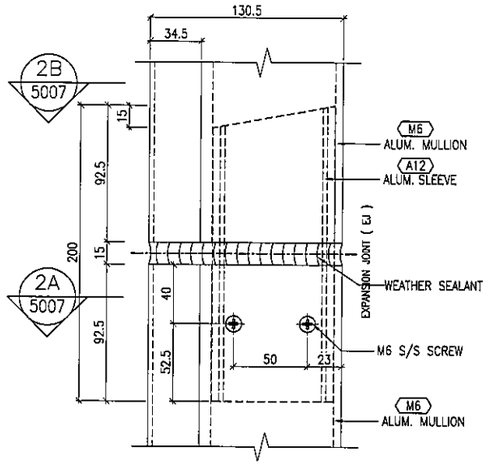

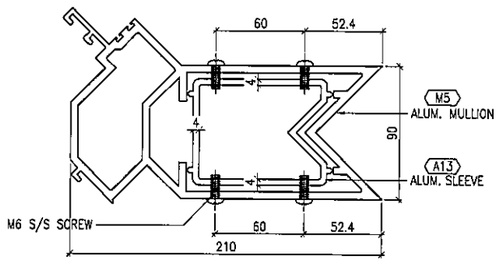

" VIEW – 1A "

" ALUMINIUM CURTAIN WALL SLEEVE "
– TYPICAL FIXING DETAIL

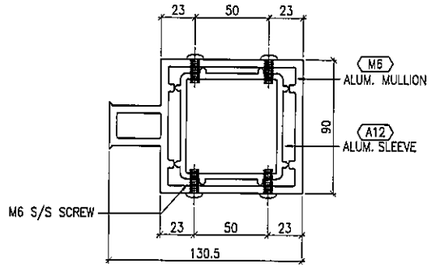

" VIEW – 2A "

" ALUMINIUM CURTAIN WALL SLEEVE "
– TYPICAL FIXING DETAIL

1 / 5008 TYPICAL MULLION DETAIL
CURTAIN WALL

2 / 5008 TYPICAL MULLION DETAIL
CURTAIN WALL

B.D. REF :

CLIENT :
信和置業有限公司
Sino Land Company Limited

ARCHITECT :
WONG TUNG & PARTNERS LIMITED
ARCHITECTS & PLANNERS

MAIN CONTRACTOR :
CR Construction Company Limited

STRUCTURAL ENGINEER :
AECOM

FACADE CONSULTANT:
AECOM

NOTE :
1. ALL DIMENSIONS ARE IN mm.
2. ALL ELEVATIONS ARE VIEWED FROM OUTSIDE.
3. ALL DIMENSIONS TO BE VERIFIED ON SITE BEFORE FABRICATION.

LEGEND :
X1 / XXXX — DETAIL MARK NO. / REFER SHEET NO.
1. F.F.L. --FINISHED FLOOR LEVEL
2. S.F.L. --STRUCTURAL FLOOR LEVEL
3. /R --REVERSED DETAIL

NO.	DATE	REVISED	BY

JOB NO. : J-837

PROJECT :
URA KWUN TONG TOWN CENTRE
REDEVELOPMENT (AREA 2 & 3) AT
NKIL 6514, KWUN TONG, KWLOON

TITLE :
TYPICAL MULLION DETAIL
FOR CURTAIN WALL

DATE : 13-JUL-18 | SCALE : 1:2 (A1)

DRAWN BY : ASING | CHECKED BY : –

美特鋁質有限公司
MIDI ALUMINIUM FABRICATOR LTD.
Units 6-8, Sunray Industrial Centre, 1/F
610 Cha Kwo Ling Road, Kowloon
Tel:23489211-4 Fax:(852)27727666

DWG NO. : J837-CW-5008 | REV. : –

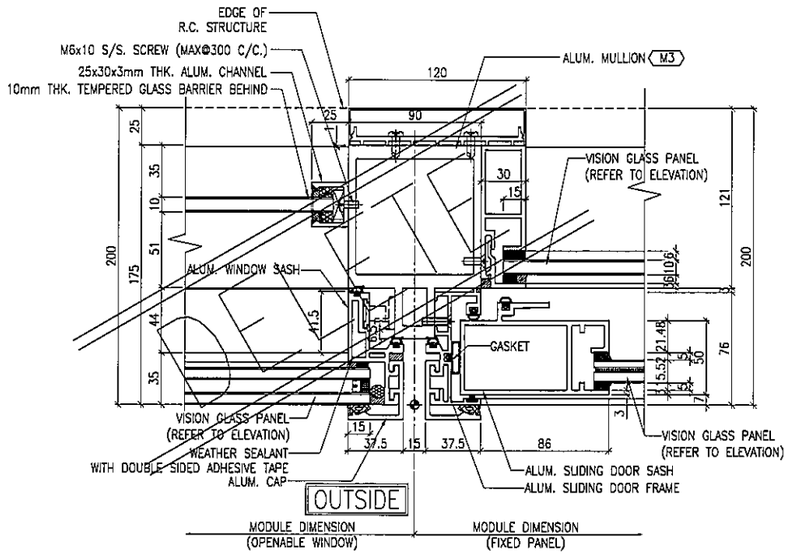

1 / 5009 TYPICAL MULLION DETAIL CURTAIN WALL

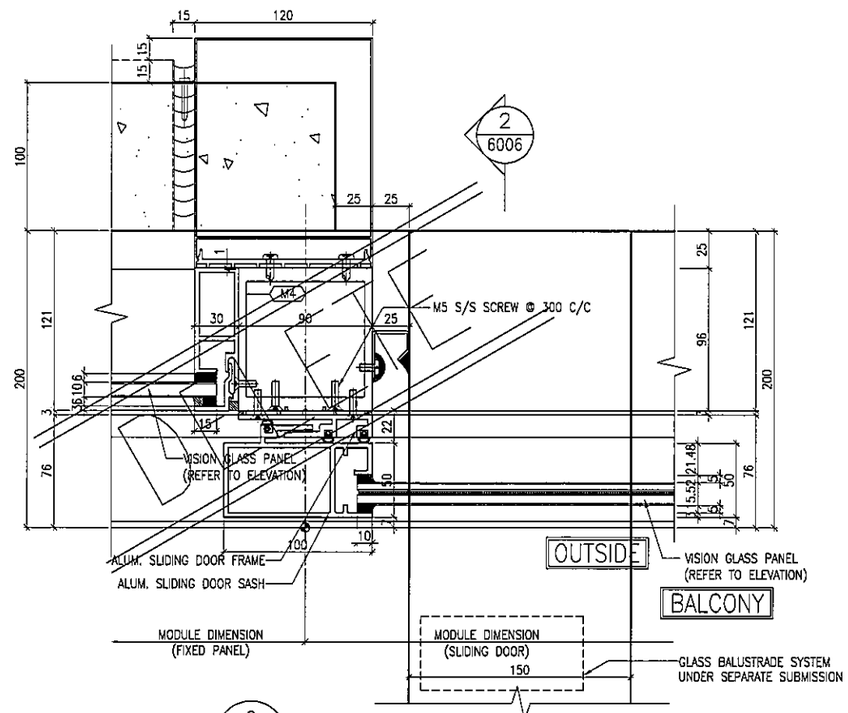

2 / 5009 TYPICAL MULLION DETAIL CURTAIN WALL

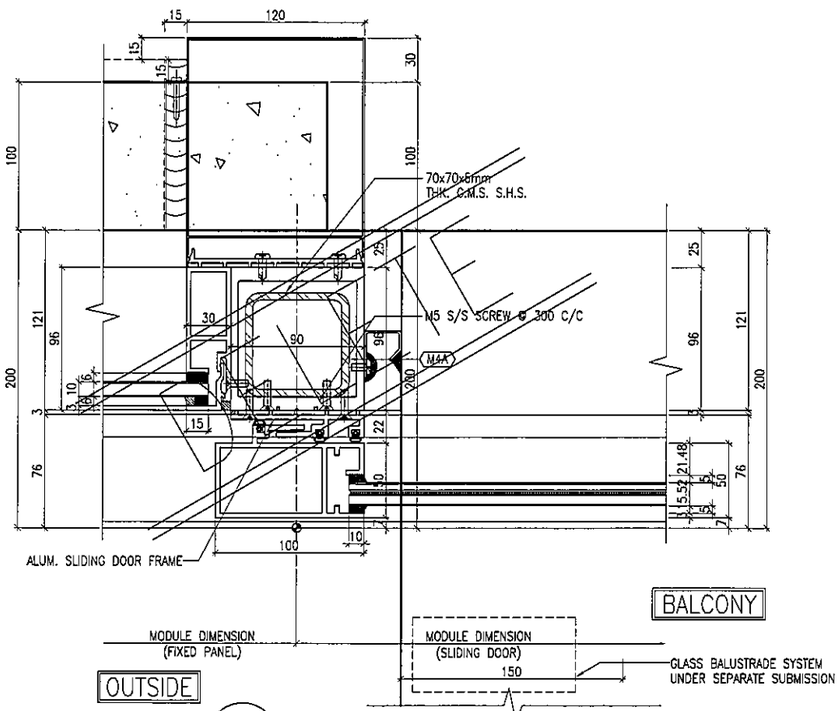

3 / 5009 TYPICAL MULLION DETAIL CURTAIN WALL

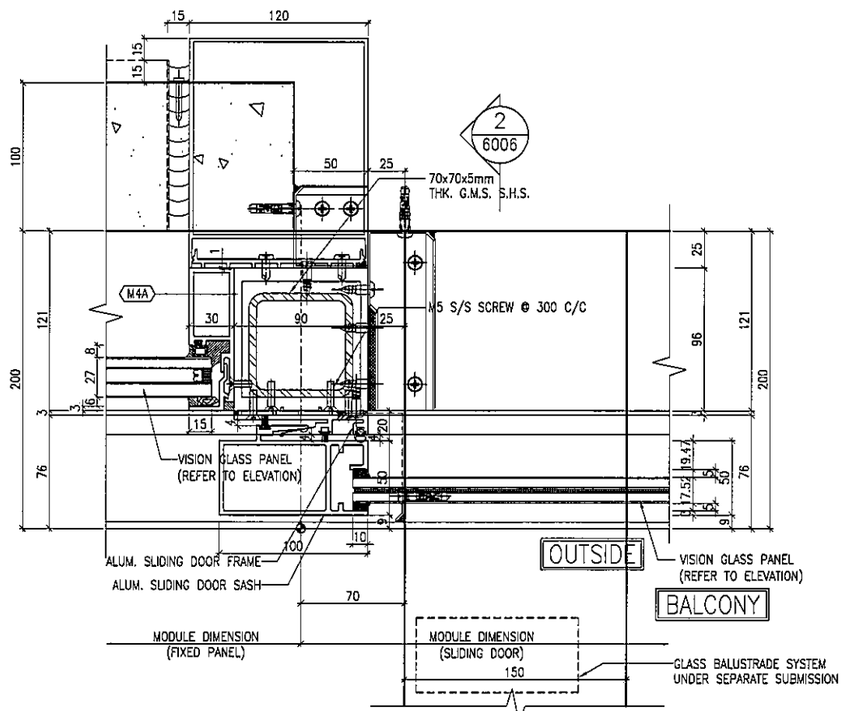

4 / 5009 TYPICAL MULLION DETAIL CURTAIN WALL

B.D. REF :

CLIENT :
信和置業有限公司
Sino Land Company Limited

ARCHITECT :
WONG TUNG & PARTNERS LIMITED
ARCHITECTS & PLANNERS

MAIN CONTRACTOR :
CR Construction Company Limited

STRUCTURAL ENGINEER :
AECOM

FACADE CONSULTANT:
AECOM

NOTE :
1. ALL DIMENSIONS ARE IN mm.
2. ALL ELEVATIONS ARE VIEWED FROM OUTSIDE.
3. ALL DIMENSIONS TO BE VERIFIED ON SITE BEFORE FABRICATION.

LEGEND :
X1 / X001 — DETAIL MARK NO. / REFER SHEET NO.
1. F.F.L. --FINISHED FLOOR LEVEL
2. S.F.L. --STRUCTURAL FLOOR LEVEL
3. /R --REVERSED DETAIL

NO.	DATE	REVISED	BY
B	04/12/2018	GENERAL REVISED	
A	24/11/2018	GENERAL REVISED	

JOB NO. : J-837

PROJECT :
URA KWUN TONG TOWN CENTRE REDEVELOPMENT (AREA 2 & 3) AT NKIL 6514, KWUN TONG, KWLOON

TITLE :
TYPICAL MULLION DETAIL FOR CURTAIN WALL

DATE : 13-JUL-18 | SCALE : 1:2 (A1)

DRAWN BY : ASING | CHECKED BY : -

美特鋁質有限公司
MIDI ALUMINIUM FABRICATOR LTD.
Units 6-8, Sunray Industrial Centre, 1/F
610 Cha Kwo Ling Road, Kowloon
Tel:23489211-4 Fax:(852)27727666

DWG NO. : J837-CW-5009 | REV. : B

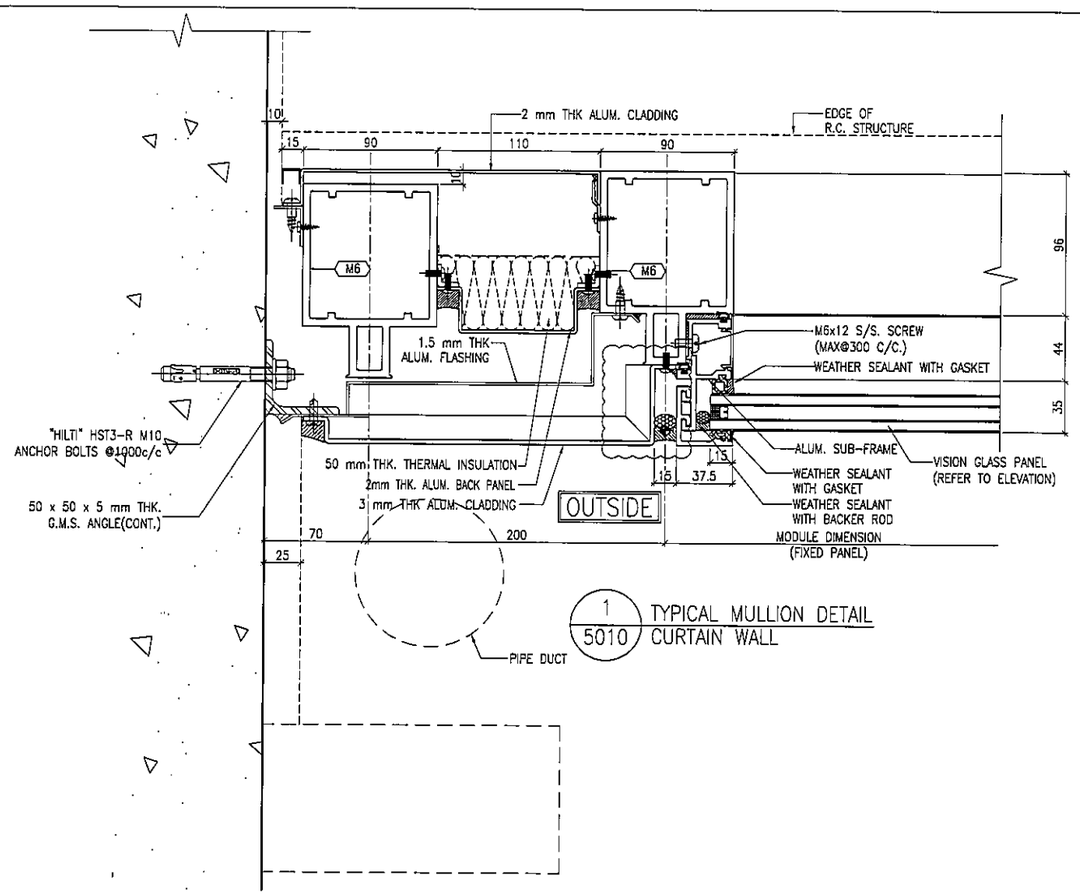

1 / 5010 TYPICAL MULLION DETAIL CURTAIN WALL

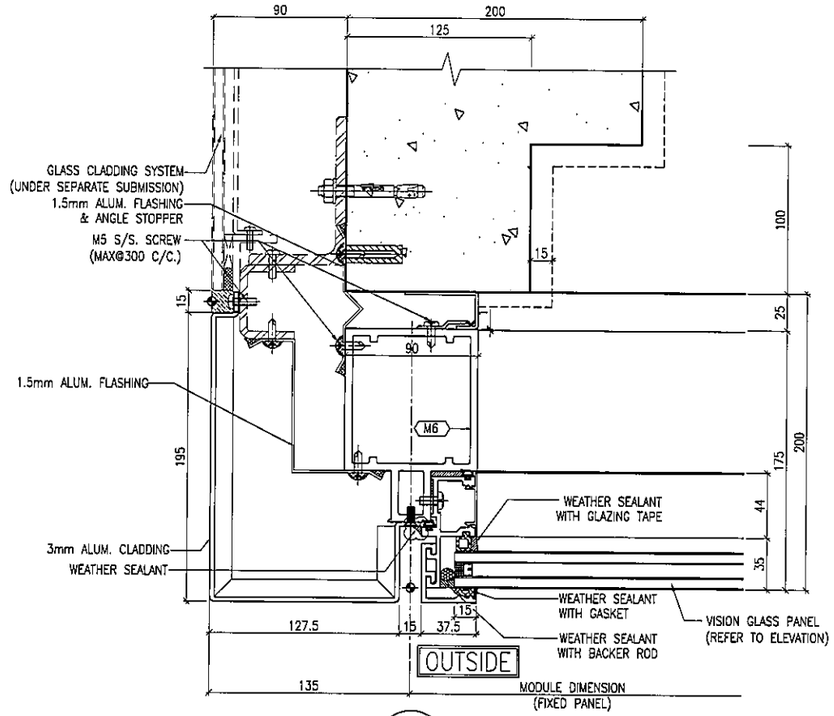

2 / 5010 TYPICAL MULLION DETAIL CURTAIN WALL

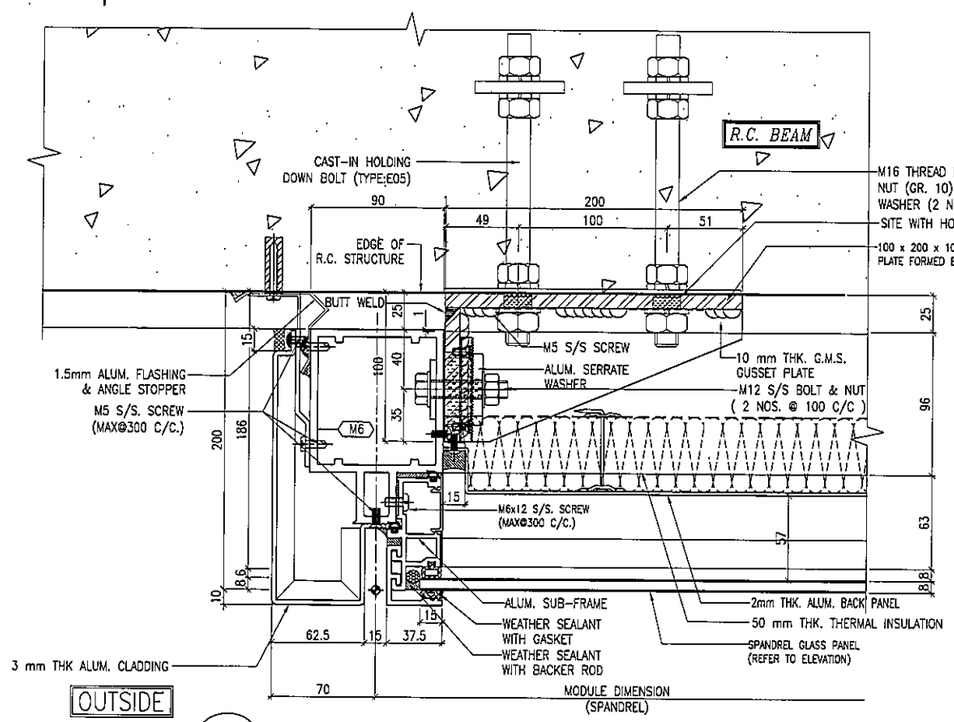

3 / 5010 TYPICAL MULLION DETAIL CURTAIN WALL

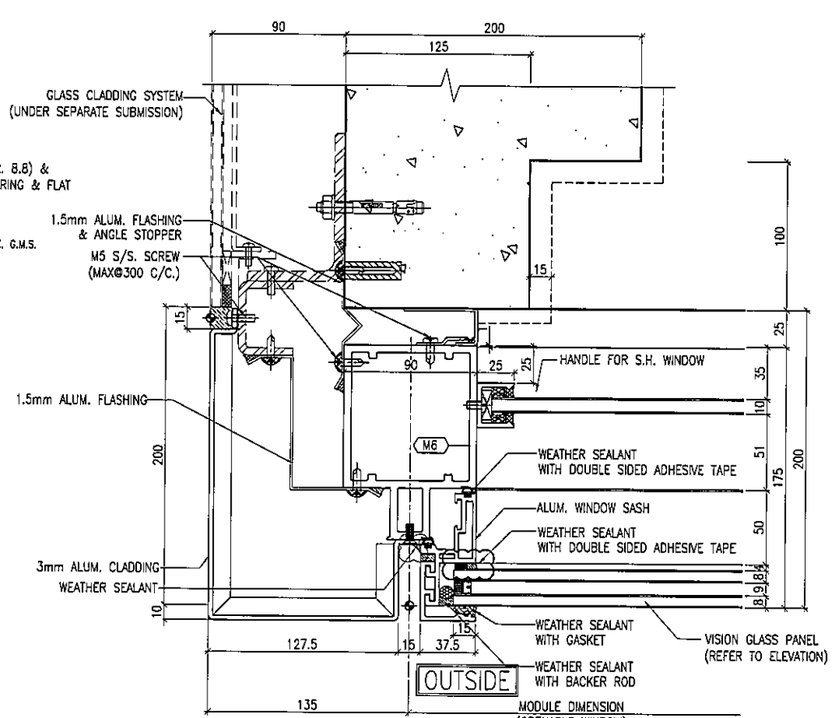

4 / 5010 TYPICAL MULLION DETAIL CURTAIN WALL

B.D. REF :

CLIENT :
信和置業有限公司
Sino Land Company Limited

ARCHITECT :
WONG TUNG & PARTNERS LIMITED
ARCHITECTS & PLANNERS

MAIN CONTRACTOR :
CR Construction Company Limited

STRUCTURAL ENGINEER :
AECOM

FACADE CONSULTANT:
AECOM

NOTE :
1. ALL DIMENSIONS ARE IN mm.
2. ALL ELEVATIONS ARE VIEWED FROM OUTSIDE.
3. ALL DIMENSIONS TO BE VERIFIED ON SITE BEFORE FABRICATION.

LEGEND :
- X1 / X001 — DETAIL MARK NO. / REFER SHEET NO.
1. F.F.L. --FINISHED FLOOR LEVEL
2. S.F.L. --STRUCTURAL FLOOR LEVEL
3. (R) --REVERSED DETAIL

NO.	DATE	REVISED	BY
B	22/12/2018	GENERAL REVISED	
A	24/11/2018	GENERAL REVISED	

JOB NO. : J-837

PROJECT :
URA KWUN TONG TOWN CENTRE REDEVELOPMENT (AREA 2 & 3) AT NKIL 6514, KWUN TONG, KWLOON

TITLE :
TYPICAL MULLION DETAIL FOR CURTAIN WALL

DATE : 13-JUL-18 | SCALE : 1:2 (A1)

DRAWN BY : ASING | CHECKED BY : -

美特鋁質有限公司
MIDI ALUMINIUM FABRICATOR LTD.
Units 6-8, Sunray Industrial Centre, 1/F
610 Cha Kwo Ling Road, Kowloon
Tel:23489211-4 Fax:(852)27727666

DWG NO. : J837-CW-5010 | REV. : B

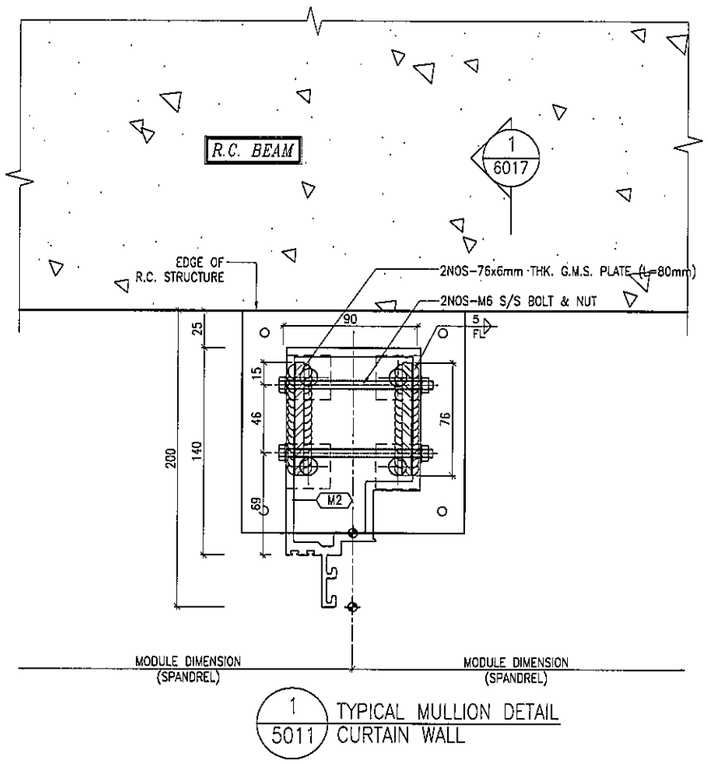

1 / 5011 TYPICAL MULLION DETAIL CURTAIN WALL

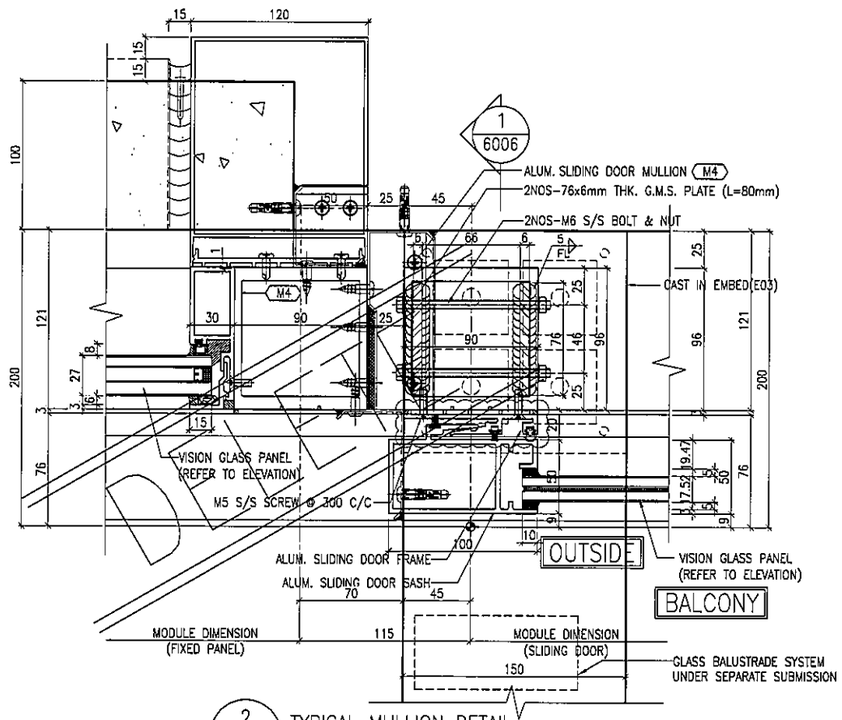

2 / 5011 TYPICAL MULLION DETAIL CURTAIN WALL

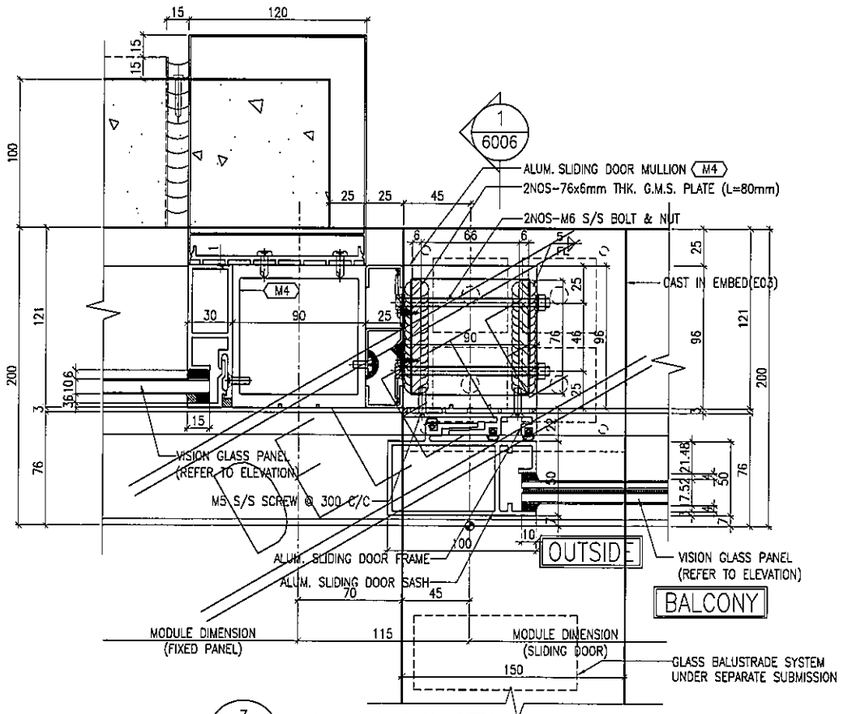

3 / 5011 TYPICAL MULLION DETAIL CURTAIN WALL

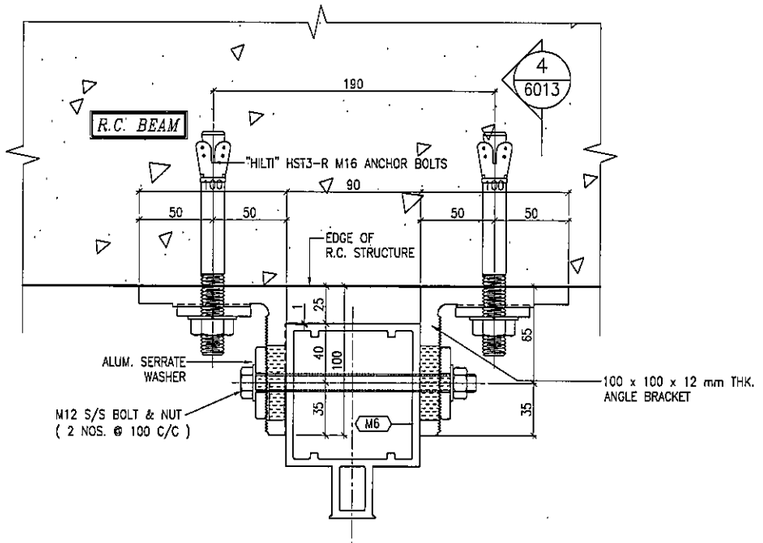

4 / 5011 TYPICAL MULLION DETAIL CURTAIN WALL

B.D. REF :

CLIENT :
信和置業有限公司
Sino Land Company Limited

ARCHITECT :
WONG TUNG & PARTNERS LIMITED
ARCHITECTS & PLANNERS

MAIN CONTRACTOR :
CR Construction Company Limited

STRUCTURAL ENGINEER :
AECOM

FACADE CONSULTANT:
AECOM

NOTE :
1. ALL DIMENSIONS ARE IN mm.
2. ALL ELEVATIONS ARE VIEWED FROM OUTSIDE.
3. ALL DIMENSIONS TO BE VERIFIED ON SITE BEFORE FABRICATION.

LEGEND :
- X1 / X001 — DETAIL MARK NO. / REFER SHEET NO.
1. F.F.L. --FINISHED FLOOR LEVEL
2. S.F.L. --STRUCTURAL FLOOR LEVEL
3. (/R) --REVERSED DETAIL

NO.	DATE	REMARK	BY
B	04/12/2018	GENERAL REVISED	
A	24/11/2018	GENERAL REVISED	

JOB NO. : J-837

PROJECT :
URA KWUN TONG TOWN CENTRE REDEVELOPMENT (AREA 2 & 3) AT NKIL 6514, KWUN TONG, KWLOON

TITLE :
TYPICAL MULLION DETAIL FOR CURTAIN WALL

DATE : 13-JUL-18 | SCALE : 1:2 (A1)

DRAWN BY : ASING | CHECKED BY : -

美特鋁質有限公司
MIDI ALUMINIUM FABRICATOR LTD.
Units 6-8, Sunray Industrial Centre, 1/F
610 Cha Kwo Ling Road, Kowloon
Tel:23489211-4 Fax:(852)27727666

DWG NO. : J837-CW-5011 | REV. : B

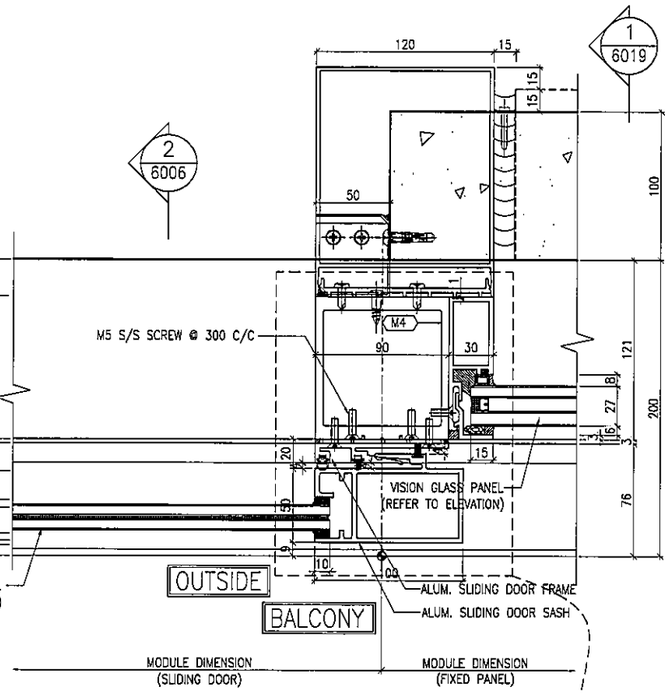

1 / 5012 TYPICAL MULLION DETAIL CURTAIN WALL

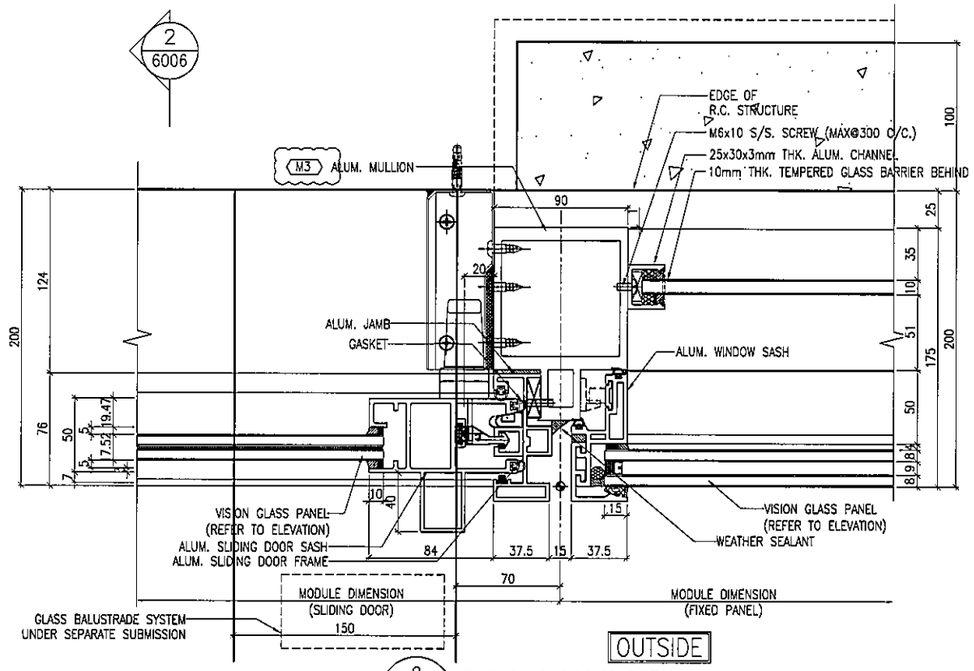

2 / 5012 TYPICAL MULLION DETAIL CURTAIN WALL

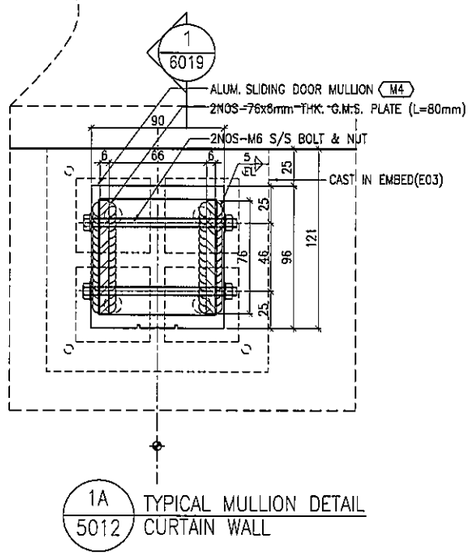

1A / 5012 TYPICAL MULLION DETAIL CURTAIN WALL

B.D. REF :

CLIENT :
信和置業有限公司
Sino Land Company Limited

ARCHITECT :
WONG TUNG & PARTNERS LIMITED
ARCHITECTS & PLANNERS

MAIN CONTRACTOR :
CR Construction Company Limited

STRUCTURAL ENGINEER :
AECOM

FACADE CONSULTANT:
AECOM

NOTE :
1. ALL DIMENSIONS ARE IN mm.
2. ALL ELEVATIONS ARE VIEWED FROM OUTSIDE.
3. ALL DIMENSIONS TO BE VERIFIED ON SITE BEFORE FABRICATION.

LEGEND :
X1 / X001 — DETAIL MARK NO. / REFER SHEET NO.
1. F.F.L. --FINISHED FLOOR LEVEL
2. S.F.L. --STRUCTURAL FLOOR LEVEL
3. (R) --REVERSED DETAIL

NO.	DATE	REVISED	BY
C	19/05/2019	GENERAL REVISED	
B	22/12/2018	GENERAL REVISED	
A	04/12/2018	GENERAL REVISED	

JOB NO. : J-837

PROJECT :
URA KWUN TONG TOWN CENTRE REDEVELOPMENT (AREA 2 & 3) AT NKIL 6514, KWUN TONG, KWLOON

TITLE :
TYPICAL MULLION DETAIL FOR CURTAIN WALL

DATE : 24-NOV-18 | SCALE : 1:2 (A1)

DRAWN BY : ASING | CHECKED BY : -

美特鋁質有限公司
MIDI ALUMINIUM FABRICATOR LTD.
Units 6-8, Sunray Industrial Centre, 1/F
610 Cha Kwo Ling Road, Kowloon
Tel:23489211-4 Fax:(852)27727666

DWG NO. : J837-CW-5012 | REV. : C

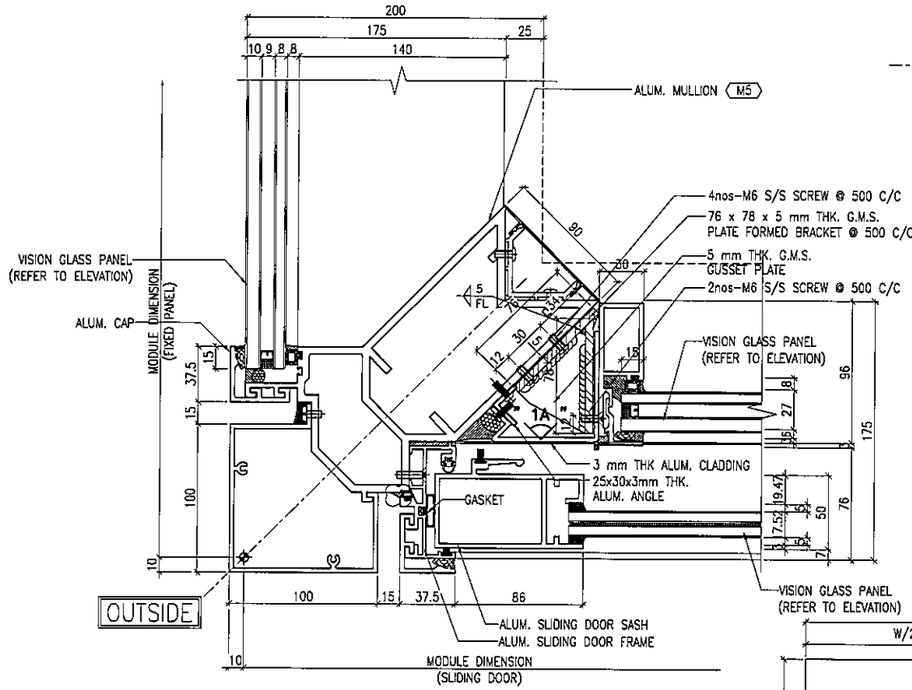

1 / 5013 TYPICAL MULLION DETAIL CURTAIN WALL

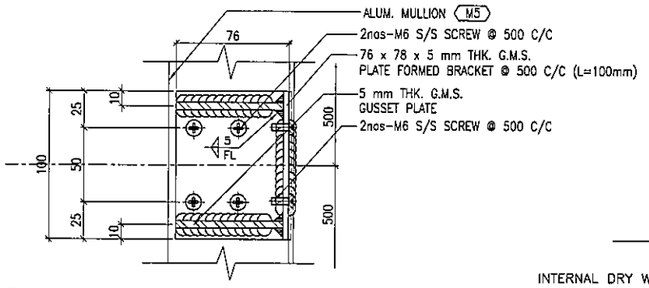

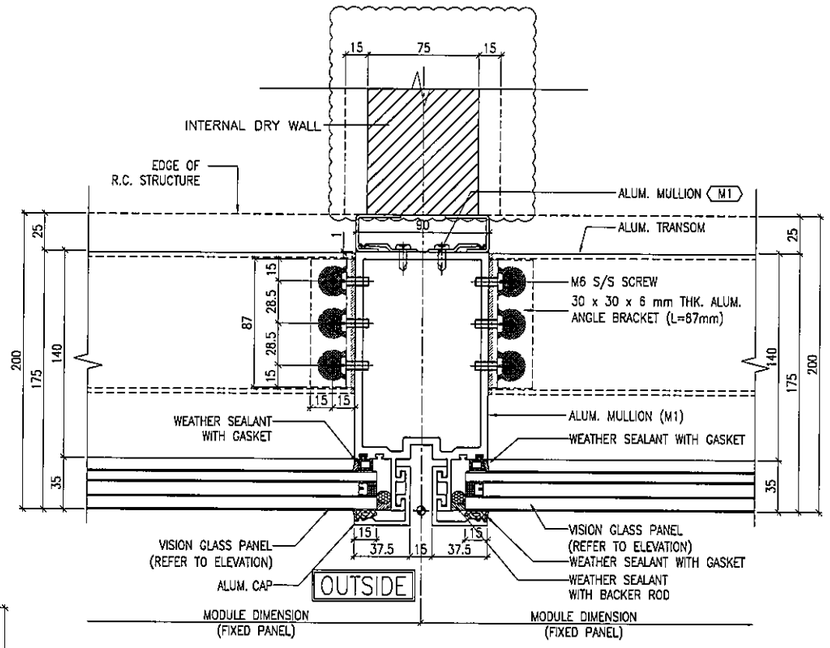

2 / 5013 TYPICAL MULLION DETAIL CURTAIN WALL

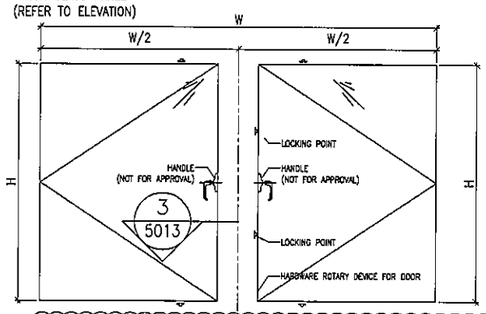

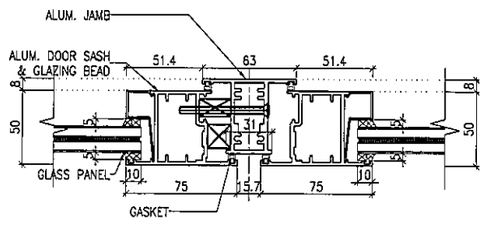

3 / 5013 TYPICAL MULLION DETAIL CURTAIN WALL

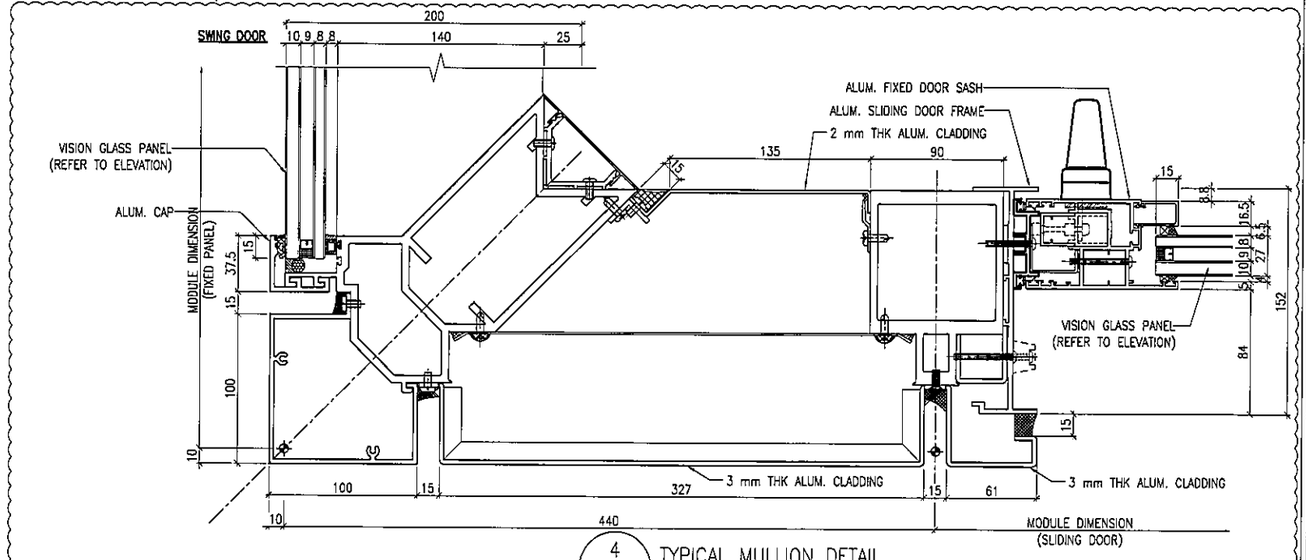

4 / 5013 TYPICAL MULLION DETAIL CURTAIN WALL (FOR T3–H 6F)

B.D. REF :

CLIENT :
信和置業有限公司
Sino Land Company Limited

ARCHITECT :
WONG TUNG & PARTNERS LIMITED
ARCHITECTS & PLANNERS

MAIN CONTRACTOR :
CR Construction Company Limited

STRUCTURAL ENGINEER :
AECOM

FACADE CONSULTANT:
AECOM

NOTE :
1. ALL DIMENSIONS ARE IN mm.
2. ALL ELEVATIONS ARE VIEWED FROM OUTSIDE.
3. ALL DIMENSIONS TO BE VERIFIED ON SITE BEFORE FABRICATION.

LEGEND :
X1 / X001 — DETAIL MARK NO. / REFER SHEET NO.
1. F.F.L. --FINISHED FLOOR LEVEL
2. S.F.L. --STRUCTURAL FLOOR LEVEL
3. /R --REVERSED DETAIL

NO.	DATE	REVISED	BY
B	20/8/2019	GENERAL REVISED	
A	22/12/2018	GENERAL REVISED	

JOB NO. : J-837

PROJECT :
URA KWUN TONG TOWN CENTRE REDEVELOPMENT (AREA 2 & 3) AT NKIL 6514, KWUN TONG, KWLOON

TITLE :
TYPICAL MULLION DETAIL FOR CURTAIN WALL

DATE : 24-NOV-18 | SCALE : 1:2 (A1)

DRAWN BY : ASING | CHECKED BY : –

美特鋁質有限公司
MIDI ALUMINIUM FABRICATOR LTD.
Units 6-8, Sunray Industrial Centre, 1/F
610 Cha Kwo Ling Road, Kowloon
Tel:23489211-4 Fax:(852)27727666

DWG NO. : J837-CW-5013 | REV. : B

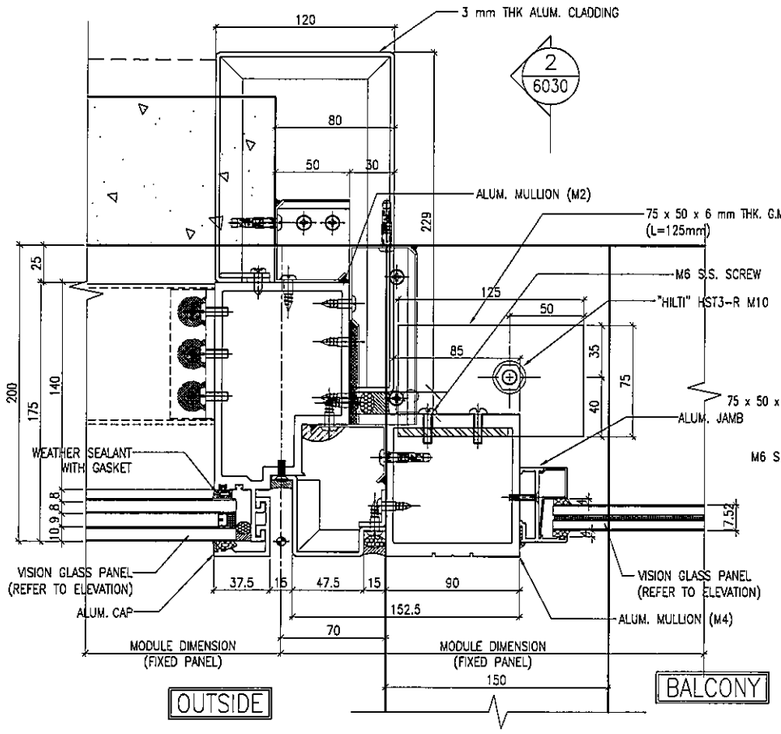

1/5014 TYPICAL MULLION DETAIL CURTAIN WALL

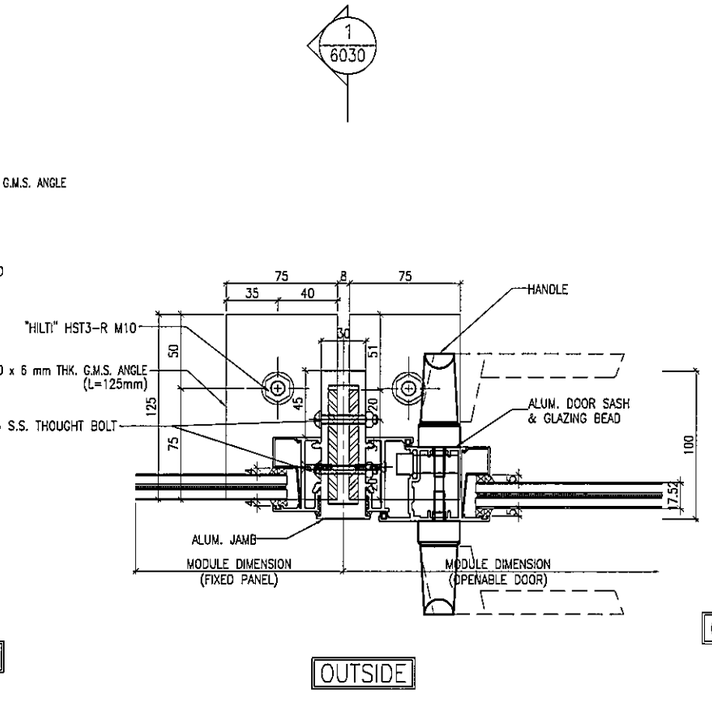

2/5014 TYPICAL MULLION DETAIL CURTAIN WALL

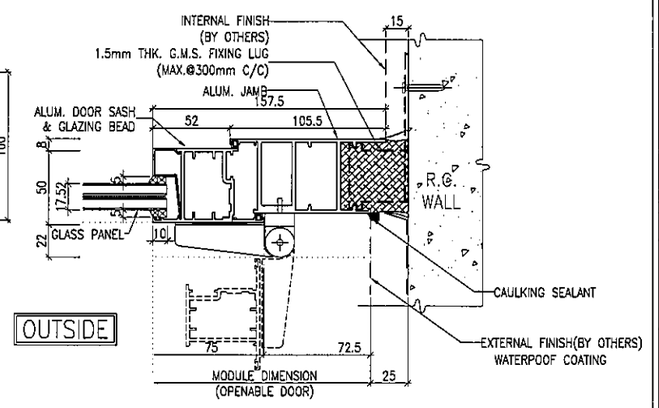

3/5014 TYPICAL MULLION DETAIL CURTAIN WALL

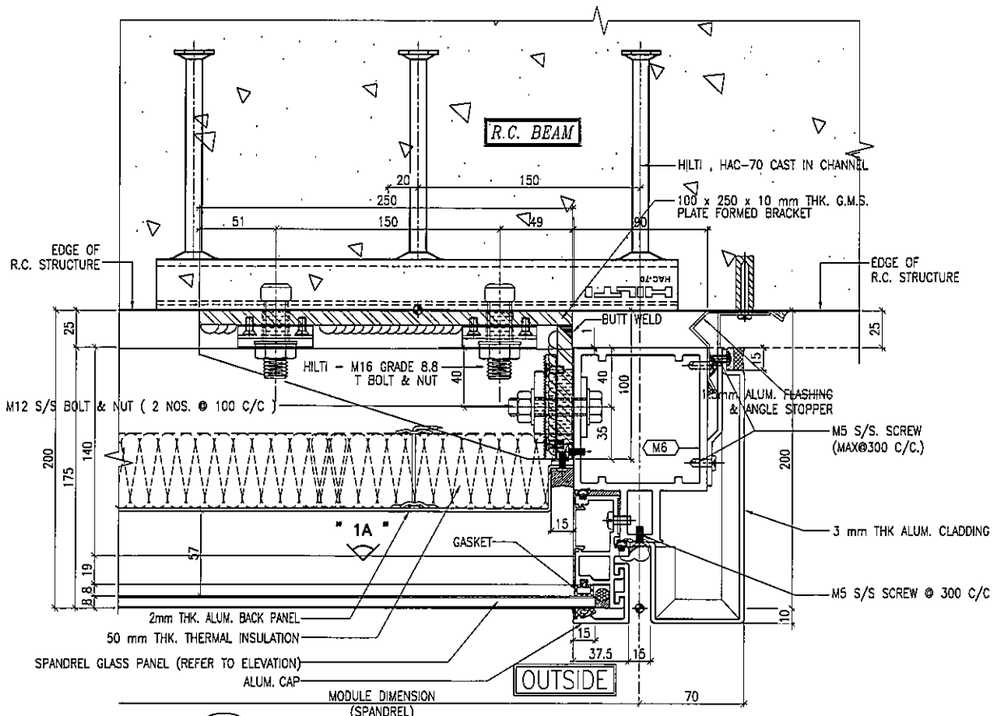

4/5014 TYPICAL MULLION DETAIL CURTAIN WALL

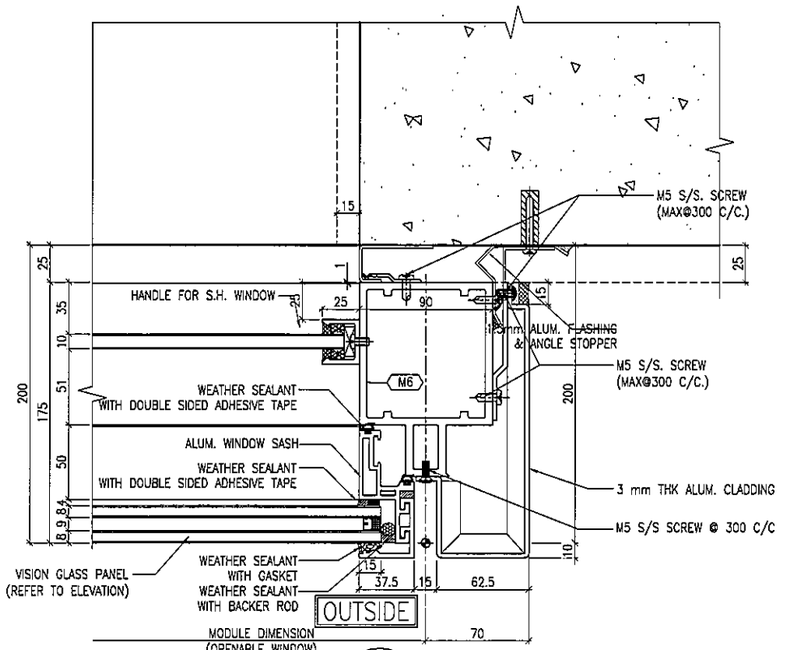

5/5014 TYPICAL MULLION DETAIL CURTAIN WALL

B.D. REF :

CLIENT :
信和置業有限公司
Sino Land Company Limited

ARCHITECT :
WONG TUNG & PARTNERS LIMITED
ARCHITECTS & PLANNERS

MAIN CONTRACTOR :
CR Construction Company Limited

STRUCTURAL ENGINEER :
AECOM

FACADE CONSULTANT:
AECOM

NOTE :
1. ALL DIMENSIONS ARE IN mm.
2. ALL ELEVATIONS ARE VIEWED FROM OUTSIDE.
3. ALL DIMENSIONS TO BE VERIFIED ON SITE BEFORE FABRICATION.

LEGEND :
X1 / X001 — DETAIL MARK NO. / REFER SHEET NO.
1. F.F.L. --FINISHED FLOOR LEVEL
2. S.F.L. --STRUCTURAL FLOOR LEVEL
3. /R --REVERSED DETAIL

NO.	DATE	REVISED	BY
A	15/02/2019	GENERAL REVISED	

JOB NO. : J-837

PROJECT :
URA KWUN TONG TOWN CENTRE REDEVELOPMENT (AREA 2 & 3) AT NKIL 6514, KWUN TONG, KWLOON

TITLE :
TYPICAL MULLION DETAIL FOR CURTAIN WALL

DATE : 22-DEC-18 | SCALE : 1:2 (A1)

DRAWN BY : ASING | CHECKED BY : -

美特鋁製有限公司
MIDI ALUMINIUM FABRICATOR LTD.
Units 6-8, Sunray Industrial Centre, 1/F
610 Cha Kwo Ling Road, Kowloon
Tel:23489211-4 Fax:(852)27727666

DWG NO. : J837-CW-5014 | REV. : A

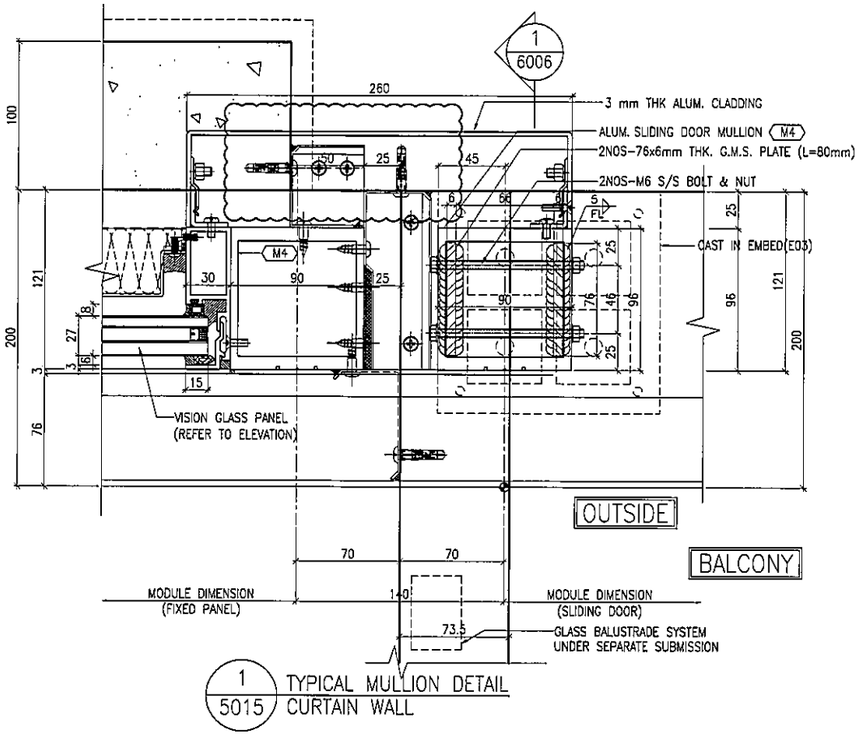

1 / 5015 TYPICAL MULLION DETAIL CURTAIN WALL

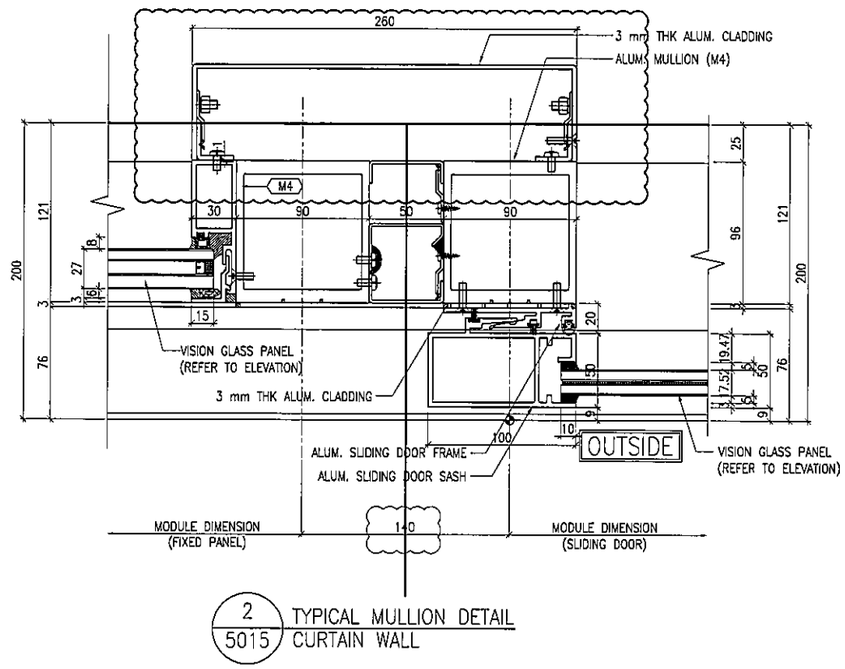

2 / 5015 TYPICAL MULLION DETAIL CURTAIN WALL

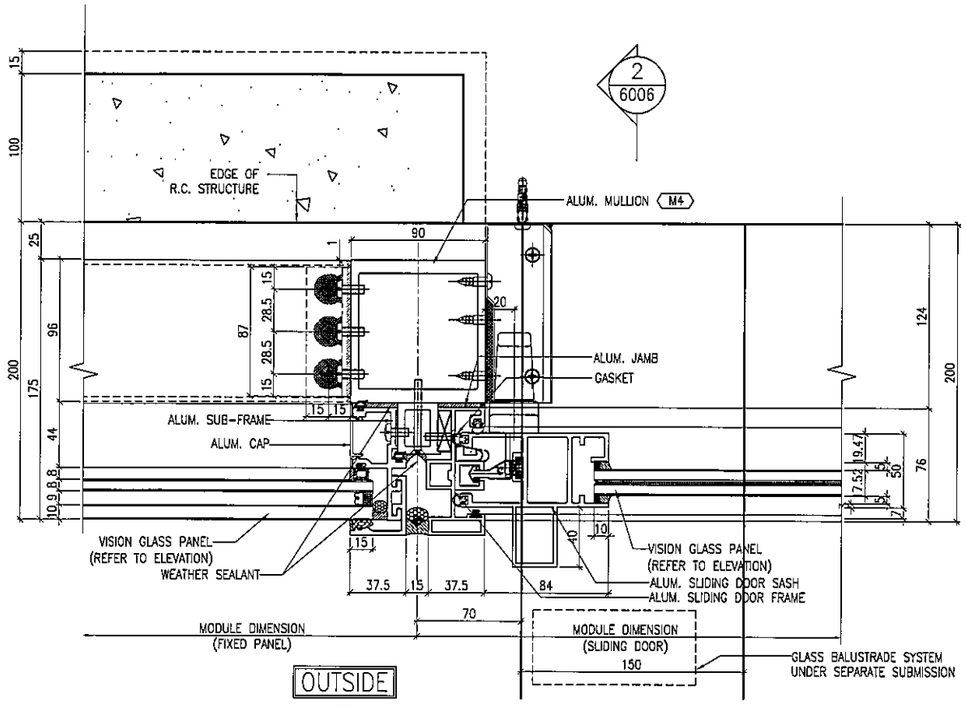

3 / 5015 TYPICAL MULLION DETAIL CURTAIN WALL

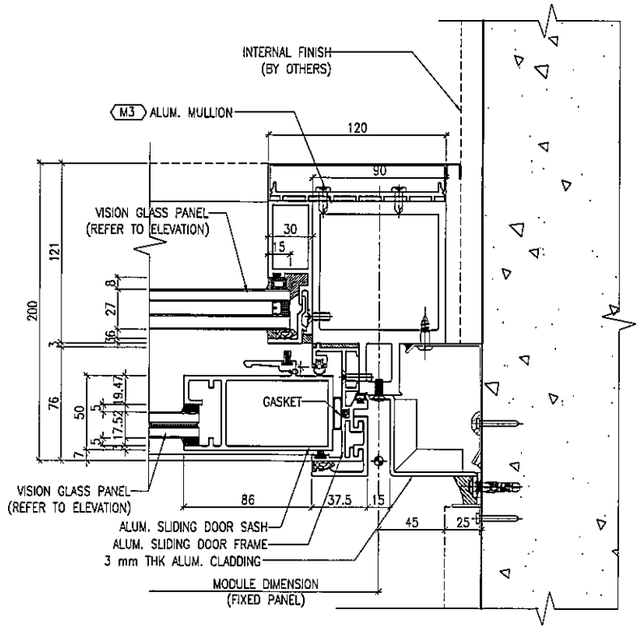

4 / 5015 TYPICAL MULLION DETAIL CURTAIN WALL

B.D. REF :

CLIENT :
信和置業有限公司
Sino Land Company Limited

ARCHITECT :
WONG TUNG & PARTNERS LIMITED
ARCHITECTS & PLANNERS

MAIN CONTRACTOR :
CR Construction Company Limited

STRUCTURAL ENGINEER :
AECOM

FACADE CONSULTANT:
AECOM

NOTE :
1. ALL DIMENSIONS ARE IN mm.
2. ALL ELEVATIONS ARE VIEWED FROM OUTSIDE.
3. ALL DIMENSIONS TO BE VERIFIED ON SITE BEFORE FABRICATION.

LEGEND :
X1 / XOO1 — DETAIL MARK NO. / REFER SHEET NO.
1. F.F.L. --FINISHED FLOOR LEVEL
2. S.F.L. --STRUCTURAL FLOOR LEVEL
3. (R) --REVERSED DETAIL

NO.	DATE	REVISED	BY
B	26/5/2019	GENERAL REVISED	
A	6/3/2019	GENERAL REVISED	

JOB NO. : J-837

PROJECT :
URA KWUN TONG TOWN CENTRE
REDEVELOPMENT (AREA 2 & 3) AT
NKIL 6514, KWUN TONG, KWLOON

TITLE :
TYPICAL MULLION DETAIL
FOR CURTAIN WALL

DATE : 28-JAN-19 | SCALE : 1:2 (A1)

DRAWN BY : ASING | CHECKED BY : -

美特鋁質有限公司
MIDI ALUMINUM FABRICATOR LTD.
Units 6-8, Sunray Industrial Centre, 1/F
610 Cha Kwo Ling Road, Kowloon
Tel:23489211-4 Fax:(852)27727666

DWG NO. : J837-CW-5015 | REV. : B

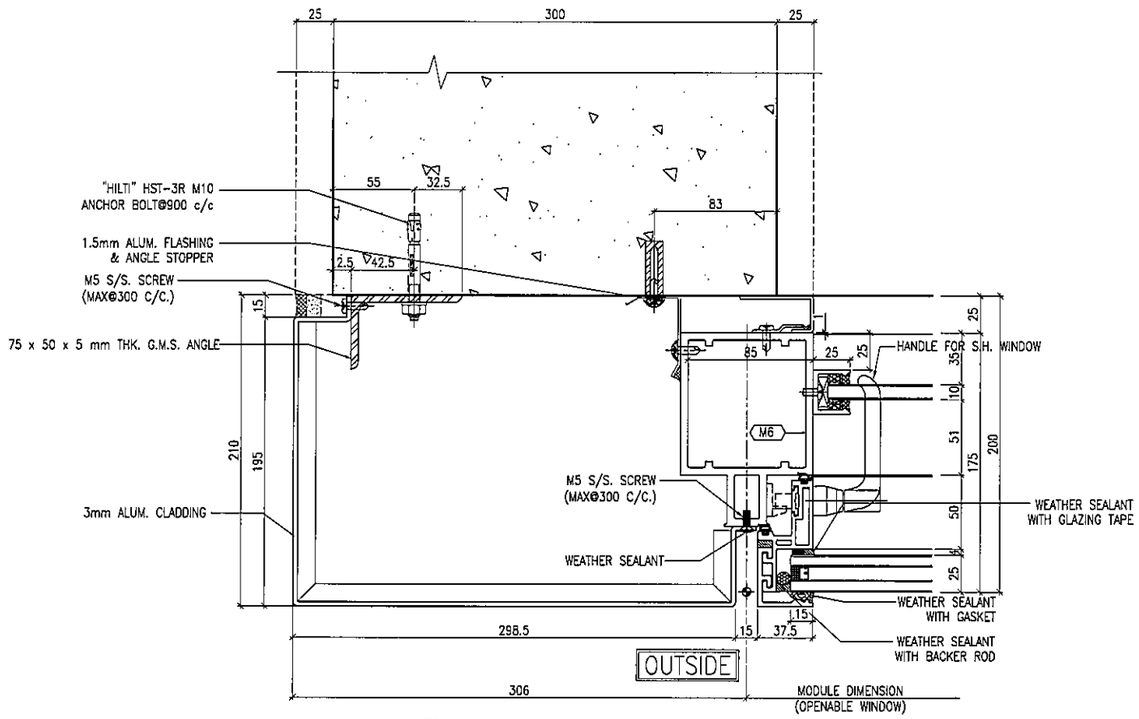

1 / 5016 TYPICAL MULLION DETAIL(FOR T1F/T2N) CURTAIN WALL

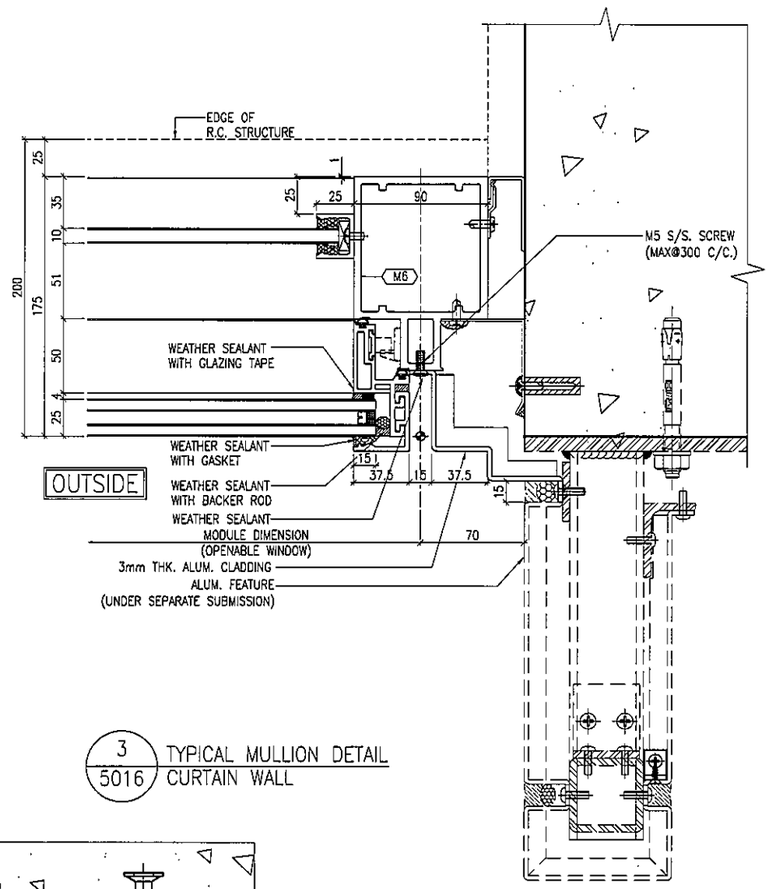

3 / 5016 TYPICAL MULLION DETAIL CURTAIN WALL

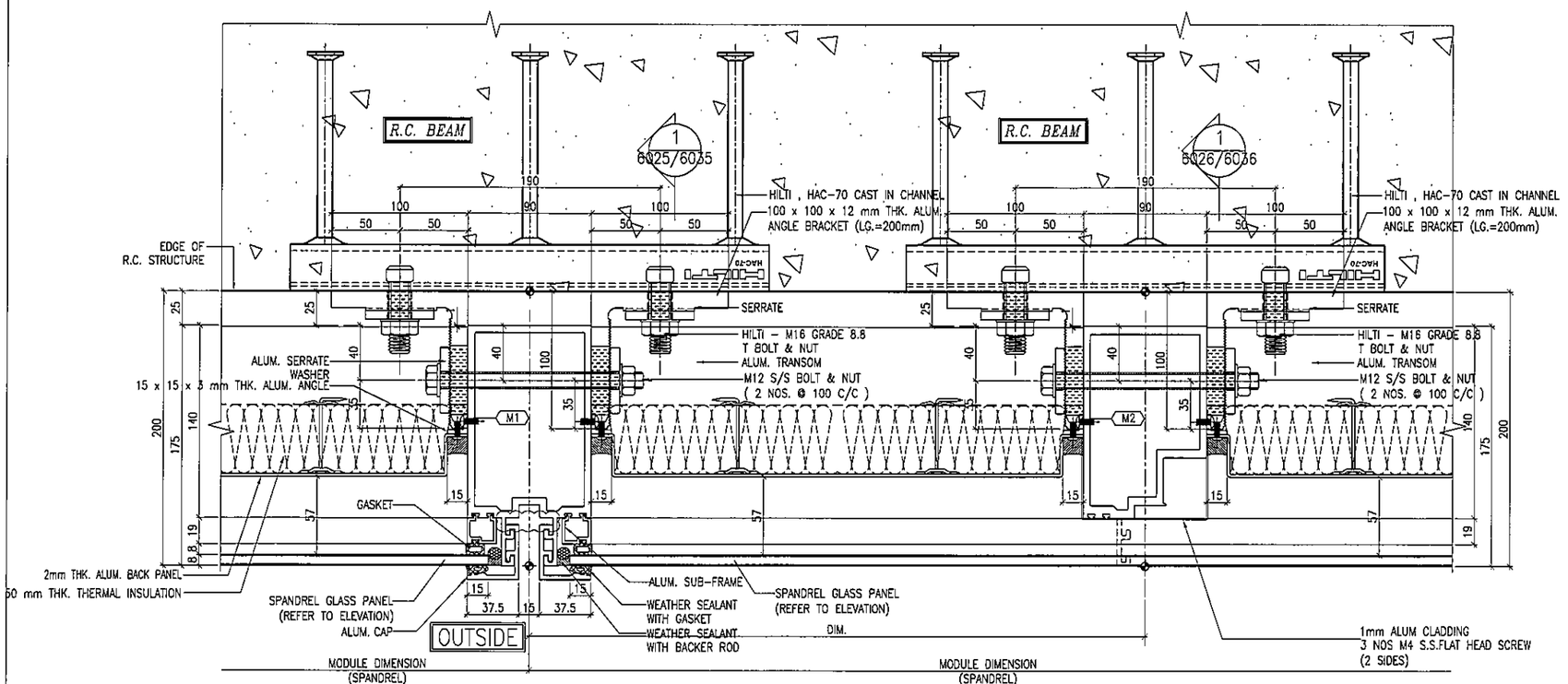

2 / 5016 TYPICAL MULLION DETAIL CURTAIN WALL

B.D. REF :

CLIENT :
信和置業有限公司
Sino Land Company Limited

ARCHITECT :
WONG TUNG & PARTNERS LIMITED
ARCHITECTS & PLANNERS

MAIN CONTRACTOR :
CR Construction Company Limited

STRUCTURAL ENGINEER :
AECOM

FACADE CONSULTANT:
AECOM

NOTE :
1. ALL DIMENSIONS ARE IN mm.
2. ALL ELEVATIONS ARE VIEWED FROM OUTSIDE.
3. ALL DIMENSIONS TO BE VERIFIED ON SITE BEFORE FABRICATION.

LEGEND :
X1 / XG01 — DETAIL MARK NO. / REFER SHEET NO.
1. F.F.L. --FINISHED FLOOR LEVEL
2. S.F.L. --STRUCTURAL FLOOR LEVEL
3. (R) --REVERSED DETAIL

NO.	DATE	REVISED	BY

JOB NO. : J-837

PROJECT :
URA KWUN TONG TOWN CENTRE
REDEVELOPMENT (AREA 2 & 3) AT
NKIL 6514, KWUN TONG, KWLOON

TITLE :
TYPICAL MULLION DETAIL
FOR CURTAIN WALL

DATE : 28-JAN-19 | SCALE : 1:2 (A1)

DRAWN BY : ASING | CHECKED BY : -

美特鋁質有限公司
MIDI ALUMINIUM FABRICATOR LTD.
Units 6-8, Sunray Industrial Centre, 1/F
610 Cha Kwo Ling Road, Kowloon
Tel:23489211-4 Fax:(852)27727666

DWG NO. : J837-CW-5015 | REV. : -

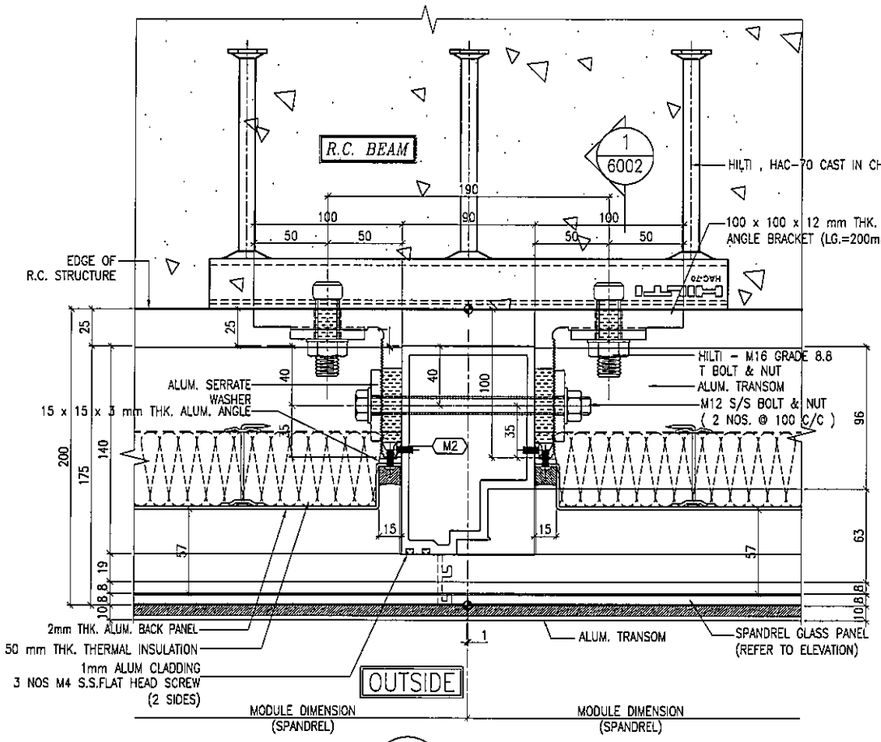

1 / 5017 TYPICAL MULLION DETAIL CURTAIN WALL

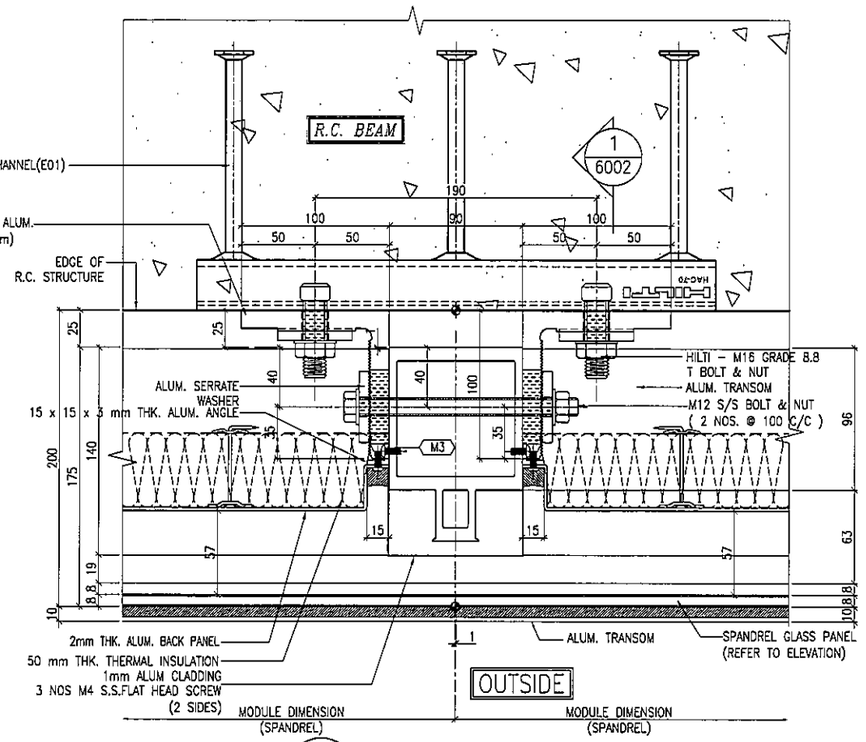

2 / 5017 TYPICAL MULLION DETAIL CURTAIN WALL

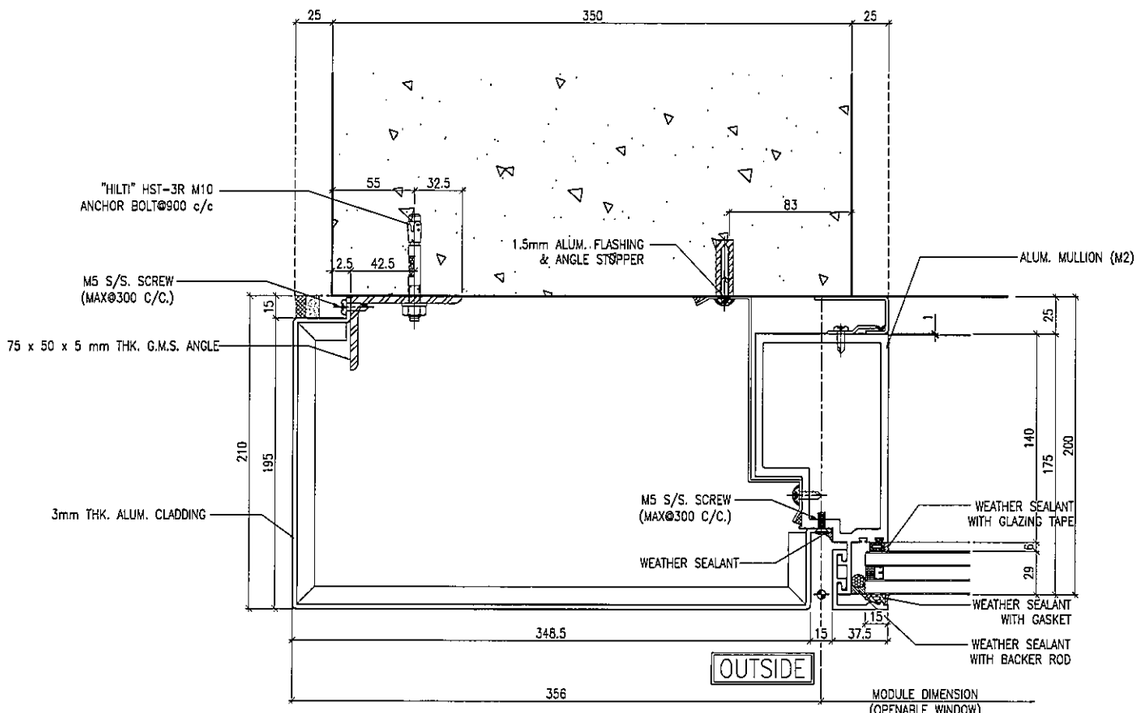

3 / 5017 TYPICAL MULLION DETAIL(for T1A only) CURTAIN WALL

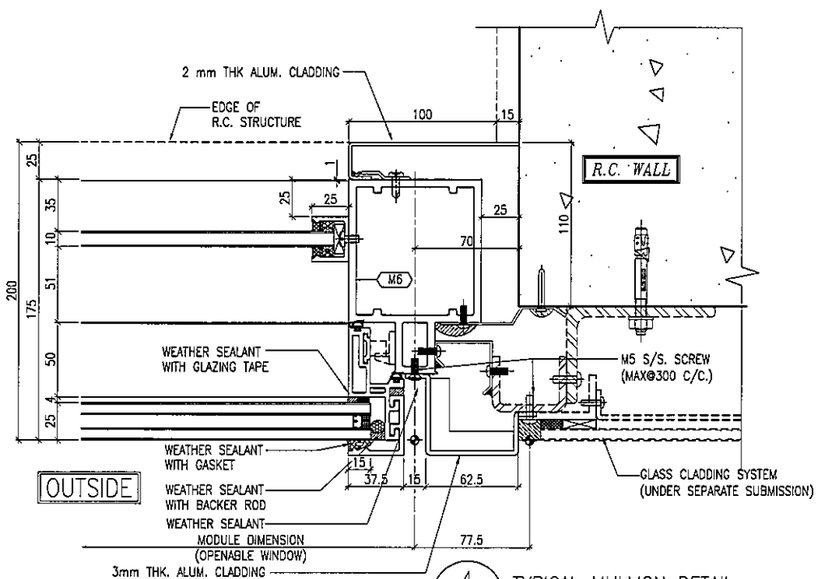

4 / 5017 TYPICAL MULLION DETAIL CURTAIN WALL

B.D. REF :

CLIENT :
信和置業有限公司
Sino Land Company Limited

ARCHITECT :
WONG TUNG & PARTNERS LIMITED
ARCHITECTS & PLANNERS

MAIN CONTRACTOR :
CR Construction Company Limited

STRUCTURAL ENGINEER :
AECOM

FACADE CONSULTANT:
AECOM

NOTE :
1. ALL DIMENSIONS ARE IN mm.
2. ALL ELEVATIONS ARE VIEWED FROM OUTSIDE.
3. ALL DIMENSIONS TO BE VERIFIED ON SITE BEFORE FABRICATION.

LEGEND :
- X1 / X001 — DETAIL MARK NO. / REFER SHEET NO.
1. F.F.L. --FINISHED FLOOR LEVEL
2. S.F.L. --STRUCTURAL FLOOR LEVEL
3. (/R) --REVERSED DETAIL

NO.	DATE	REVISED	BY

JOB NO. : J-837

PROJECT :
URA KWUN TONG TOWN CENTRE REDEVELOPMENT (AREA 2 & 3) AT NKIL 6514, KWUN TONG, KWLOON

TITLE :
TYPICAL MULLION DETAIL FOR CURTAIN WALL

DATE : 28-JAN-19 | SCALE : 1:2 (A1)

DRAWN BY : ASING | CHECKED BY : -

美特鋁質有限公司
MIDI ALUMINIUM FABRICATOR LTD.
Units 6-8, Sunray Industrial Centre, 1/F
610 Cha Kwo Ling Road, Kowloon
Tel:23489211-4 Fax:(852)27727666

DWG NO. : J837-CW-5017 | REV. : -

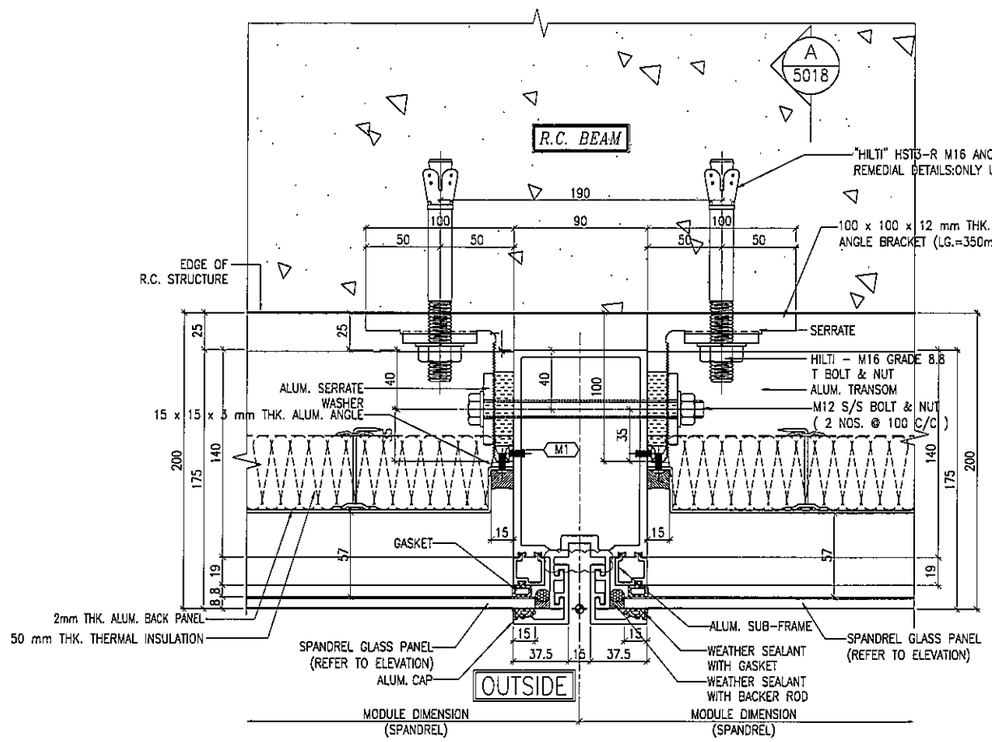

1 / 5018 REMEDIAL DETAILS CURTAIN WALL

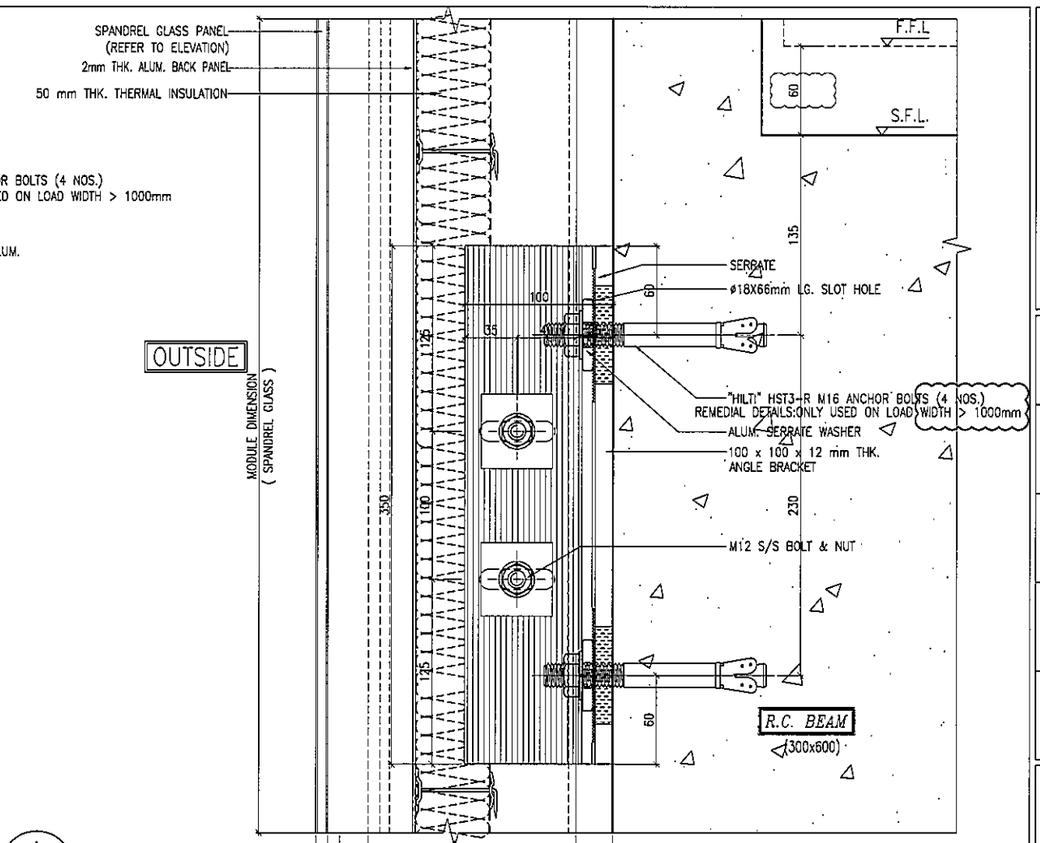

A / 5018 REMEDIAL DETAILS CURTAIN WALL

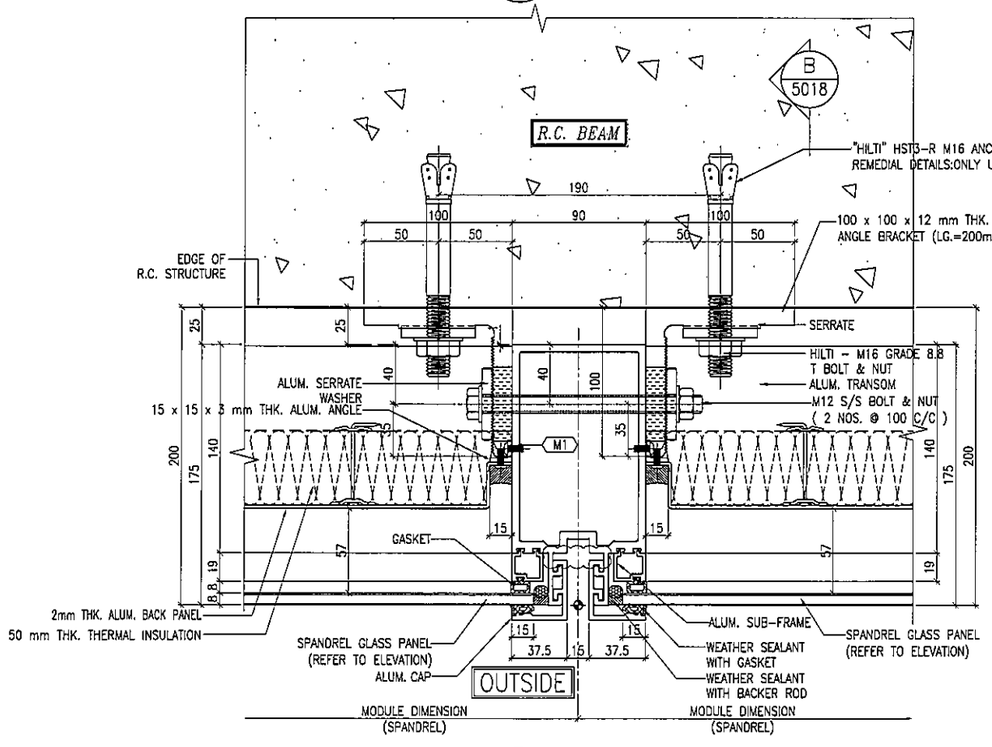

2 / 5018 REMEDIAL DETAILS CURTAIN WALL

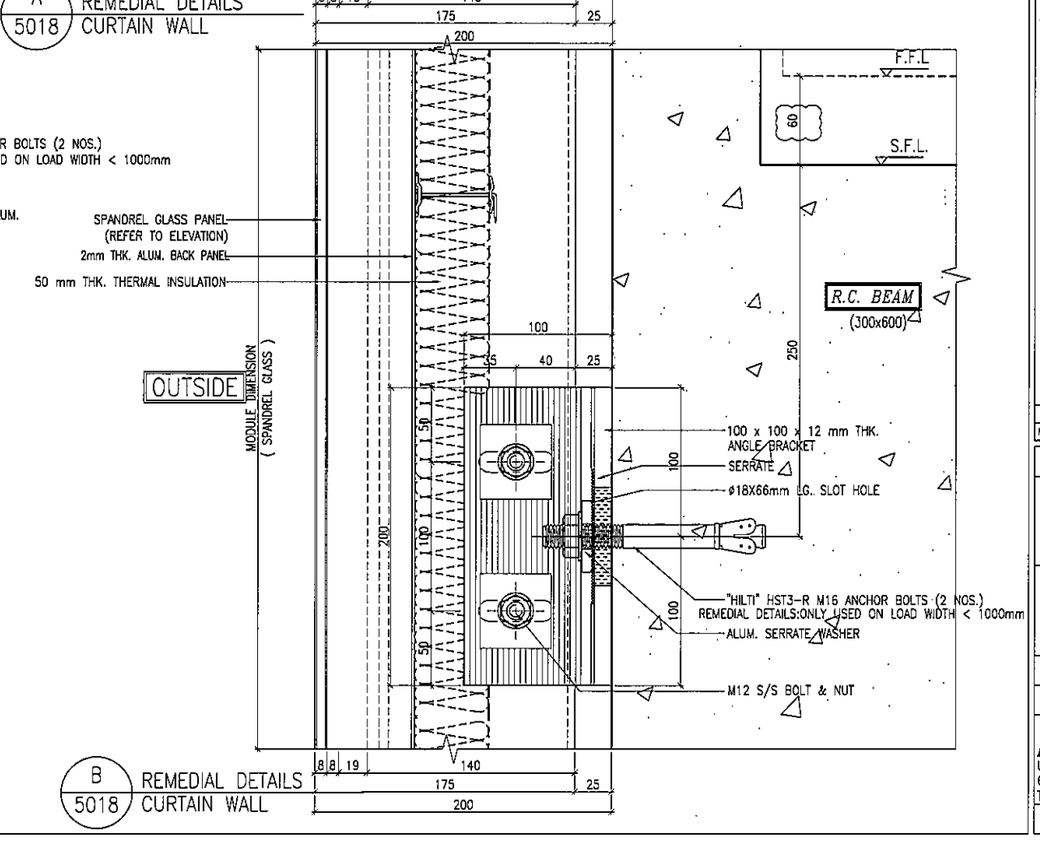

B / 5018 REMEDIAL DETAILS CURTAIN WALL

B.D. REF :

CLIENT :
信和置業有限公司
Sino Land Company Limited

ARCHITECT :
WONG TUNG & PARTNERS LIMITED
ARCHITECTS & PLANNERS

MAIN CONTRACTOR :
CR Construction Company Limited

STRUCTURAL ENGINEER :
AECOM

FACADE CONSULTANT:
AECOM

NOTE :
1. ALL DIMENSIONS ARE IN mm.
2. ALL ELEVATIONS ARE VIEWED FROM OUTSIDE.
3. ALL DIMENSIONS TO BE VERIFIED ON SITE BEFORE FABRICATION.

LEGEND :
X1 / X001 — DETAIL MARK NO. / REFER SHEET NO.
1. F.F.L. --FINISHED FLOOR LEVEL
2. S.F.L. --STRUCTURAL FLOOR LEVEL
3. (R) --REVERSED DETAIL

NO.	DATE	REVISED	BY
A	15/02/2019	GENERAL REVISED	

JOB NO. : J-837

PROJECT :
URA KWUN TONG TOWN CENTRE
REDEVELOPMENT (AREA 2 & 3) AT
NKIL 6514, KWUN TONG, KWLOON

TITLE :
REMEDIAL DETAILS
FOR CURTAIN WALL

DATE : 28-JAN-19 | SCALE : 1:2 (A1)

DRAWN BY : ASING | CHECKED BY : --

美特鋁製有限公司
MIDI ALUMINIUM FABRICATOR LTD.
Units 6-8, Sunray Industrial Centre, 1/F
610 Cha Kwo Ling Road, Kowloon
Tel:23489211-4 Fax:(852)27727666

DWG NO. : J837-CW-5018 | REV. : A

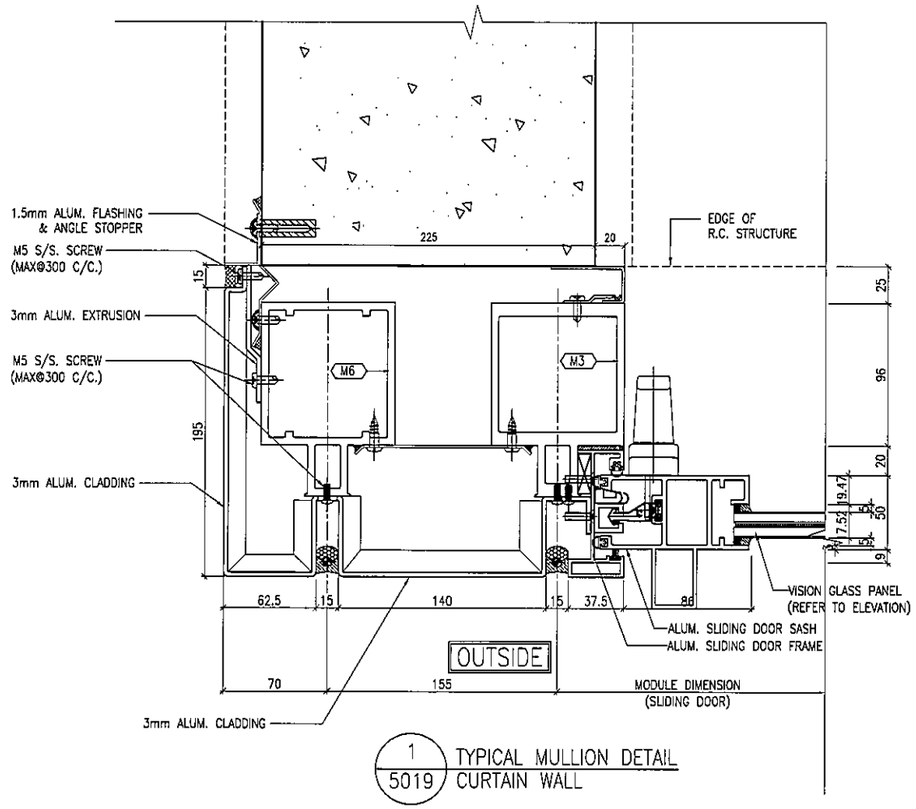

1 / 5019 TYPICAL MULLION DETAIL CURTAIN WALL

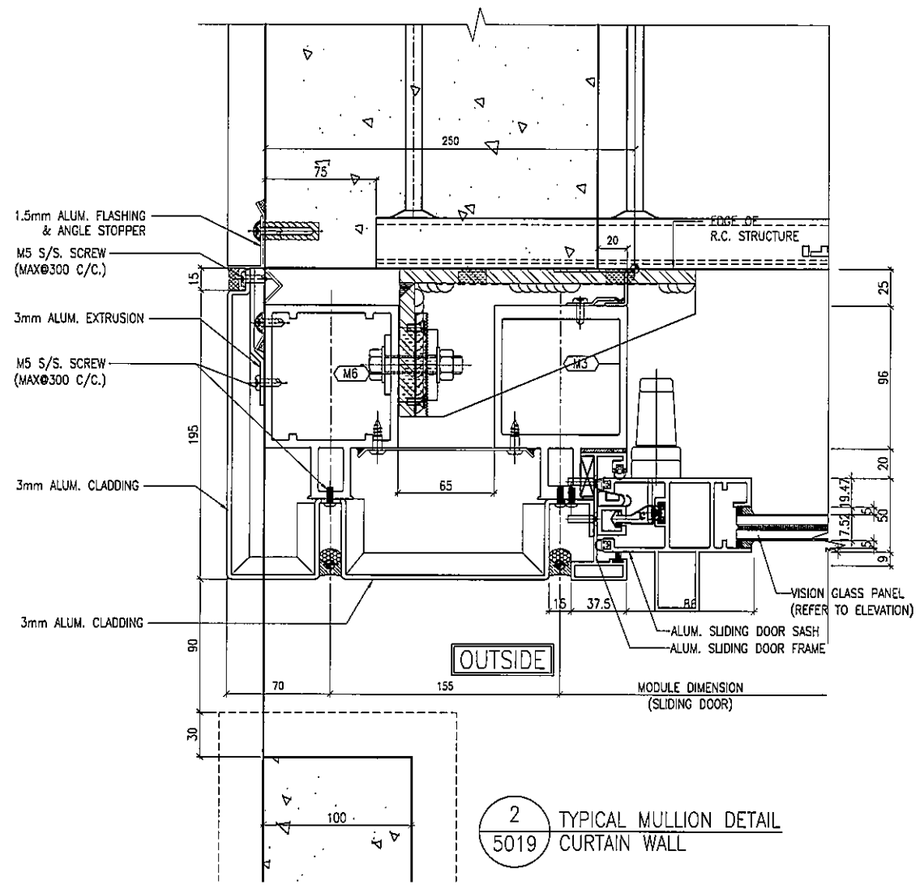

2 / 5019 TYPICAL MULLION DETAIL CURTAIN WALL

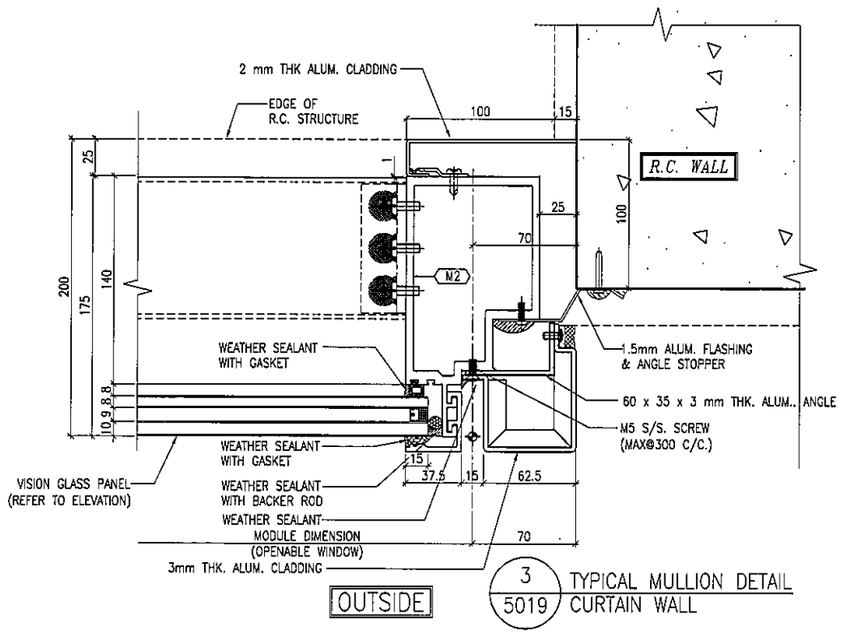

3 / 5019 TYPICAL MULLION DETAIL CURTAIN WALL

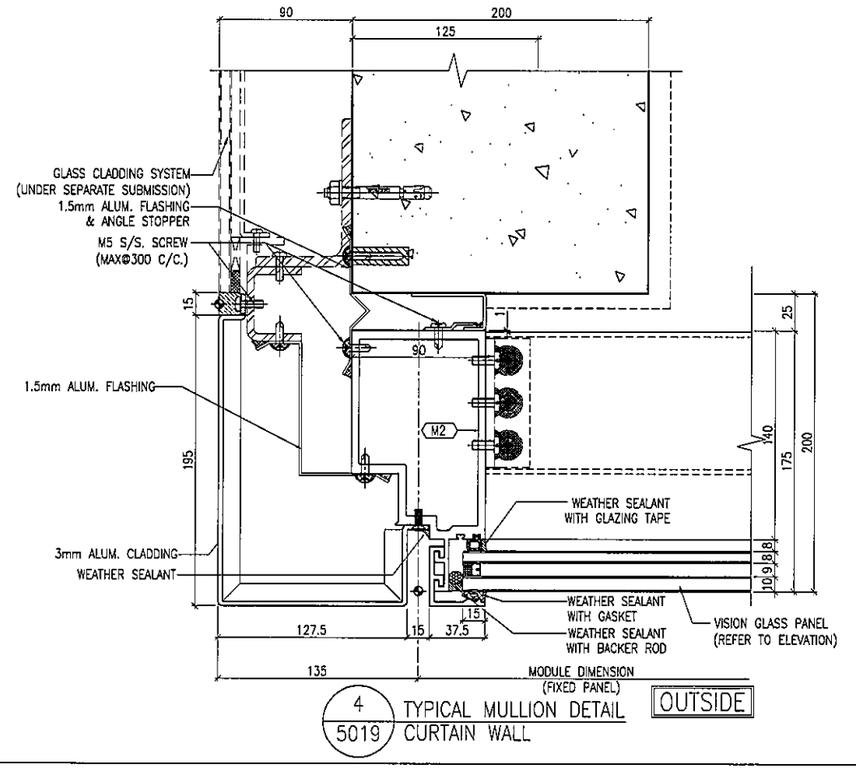

4 / 5019 TYPICAL MULLION DETAIL CURTAIN WALL

B.D. REF :

CLIENT :
信和置業有限公司
Sino Land Company Limited

ARCHITECT :
WONG TUNG & PARTNERS LIMITED
ARCHITECTS & PLANNERS

MAIN CONTRACTOR :
CR Construction Company Limited

STRUCTURAL ENGINEER :
AECOM

FACADE CONSULTANT:
AECOM

NOTE :
1. ALL DIMENSIONS ARE IN mm.
2. ALL ELEVATIONS ARE VIEWED FROM OUTSIDE.
3. ALL DIMENSIONS TO BE VERIFIED ON SITE BEFORE FABRICATION.

LEGEND :
- X1 / X001 — DETAIL MARK NO. / REFER SHEET NO.
1. F.F.L. --FINISHED FLOOR LEVEL
2. S.F.L. --STRUCTURAL FLOOR LEVEL
3. (/R) --REVERSED DETAIL

NO.	DATE	REVISED	BY

JOB NO. : J-837

PROJECT :
URA KWUN TONG TOWN CENTRE REDEVELOPMENT (AREA 2 & 3) AT NKIL 6514, KWUN TONG, KWLOON

TITLE :
TYPICAL MULLION DETAIL FOR CURTAIN WALL

DATE : 28-JAN-19	SCALE : 1:2 (A1)
DRAWN BY : ASING	CHECKED BY : -

美特鋁質有限公司
MIDI ALUMINIUM FABRICATOR LTD.
Units 6-8, Sunray Industrial Centre, 1/F
610 Cha Kwo Ling Road, Kowloon
Tel:23489211-4 Fax:(852)27727666

DWG NO. : J837-CW-5019 | REV. : -

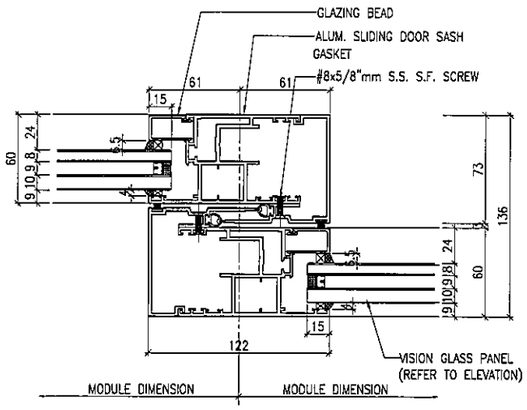

1 / 5020 TYPICAL MULLION DETAIL CURTAIN WALL

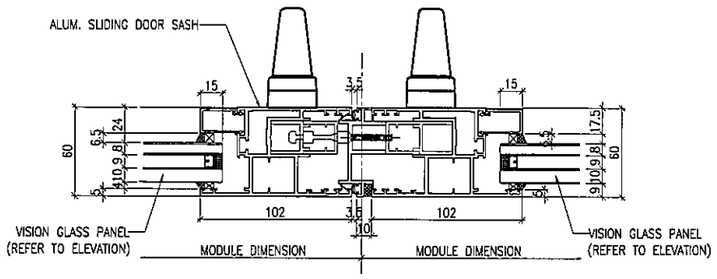

2 / 5020 TYPICAL MULLION DETAIL CURTAIN WALL

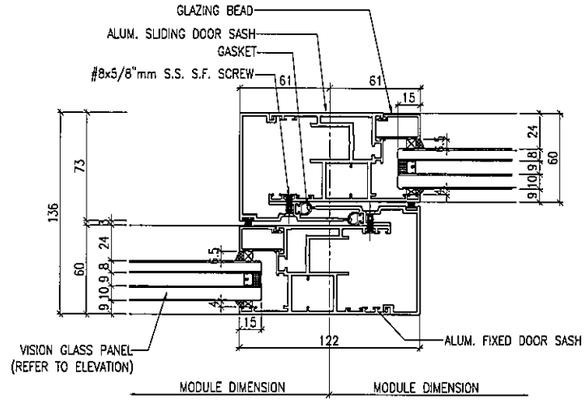

3 / 5020 TYPICAL MULLION DETAIL CURTAIN WALL

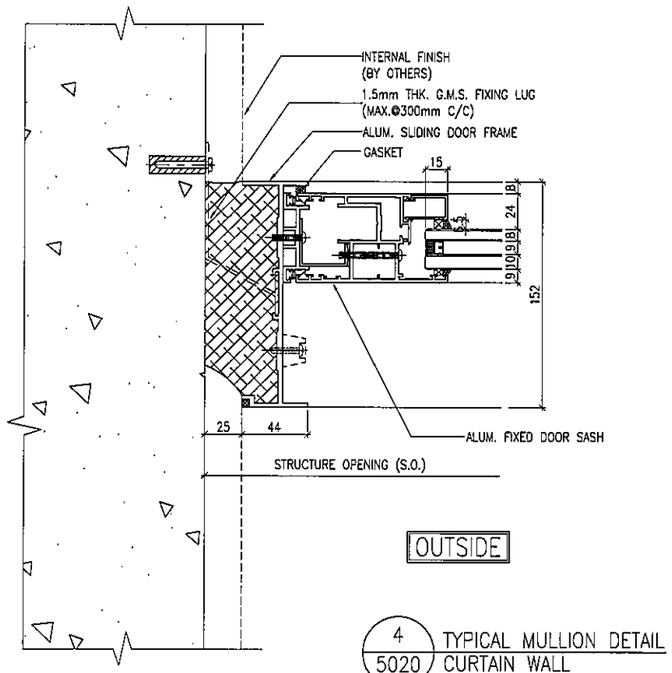

4 / 5020 TYPICAL MULLION DETAIL CURTAIN WALL

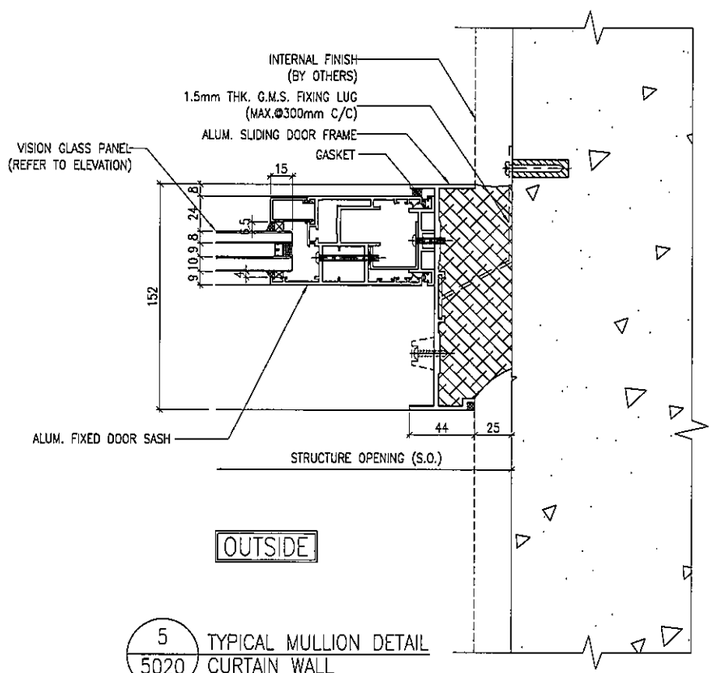

5 / 5020 TYPICAL MULLION DETAIL CURTAIN WALL

B.D. REF :

CLIENT :
信和置業有限公司
Sino Land Company Limited

ARCHITECT :
WONG TUNG & PARTNERS LIMITED
ARCHITECTS & PLANNERS

MAIN CONTRACTOR :
CR Construction Company Limited

STRUCTURAL ENGINEER :
AECOM

FACADE CONSULTANT:
AECOM

NOTE :
1. ALL DIMENSIONS ARE IN mm.
2. ALL ELEVATIONS ARE VIEWED FROM OUTSIDE.
3. ALL DIMENSIONS TO BE VERIFIED ON SITE BEFORE FABRICATION.

LEGEND :
X1 / X001 — DETAIL MARK NO. / REFER SHEET NO.
1. F.F.L. --FINISHED FLOOR LEVEL
2. S.F.L. --STRUCTURAL FLOOR LEVEL
3. /R --REVERSED DETAIL

NO.	DATE	REVISED	BY

JOB NO. : J-837

PROJECT :
URA KWUN TONG TOWN CENTRE REDEVELOPMENT (AREA 2 & 3) AT NKIL 6514, KWUN TONG, KWLOON

TITLE :
TYPICAL MULLION DETAIL FOR CURTAIN WALL

DATE : 28-JAN-19 | SCALE : 1:2 (A1)

DRAWN BY : ASING | CHECKED BY : --

美特鋁質有限公司
MIDI ALUMINIUM FABRICATOR LTD.
Units 6-8, Sunray Industrial Centre, 1/F
610 Cha Kwo Ling Road, Kowloon
Tel:23489211-4 Fax:(852)27727666

DWG NO. : J837-CW-5020 | REV. : --

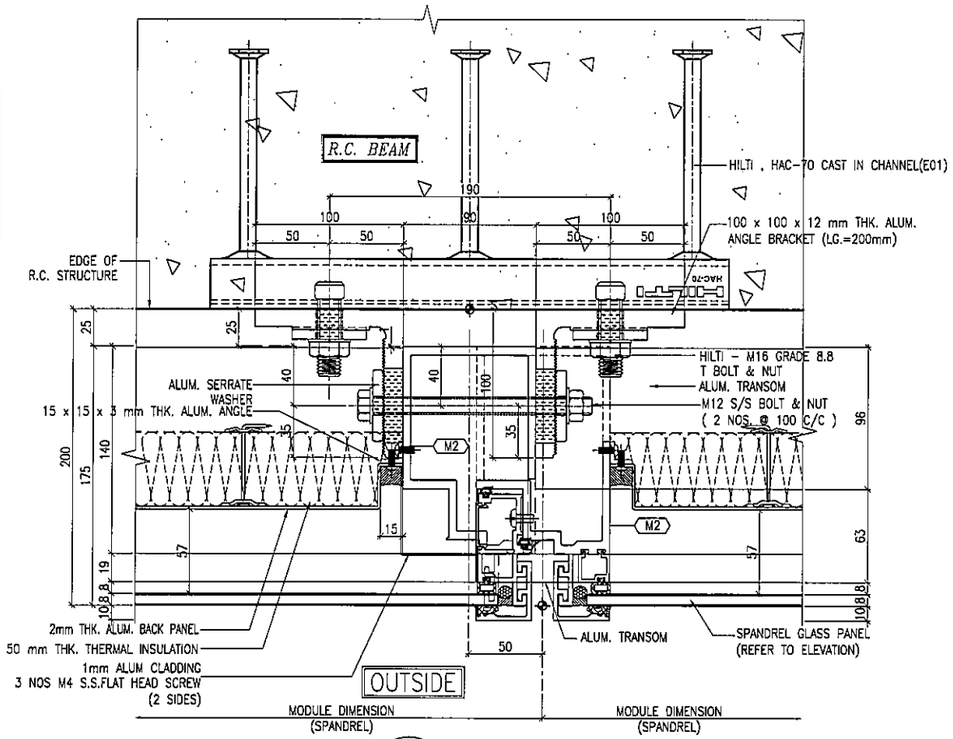

1 / 5021 TYPICAL MULLION DETAIL CURTAIN WALL

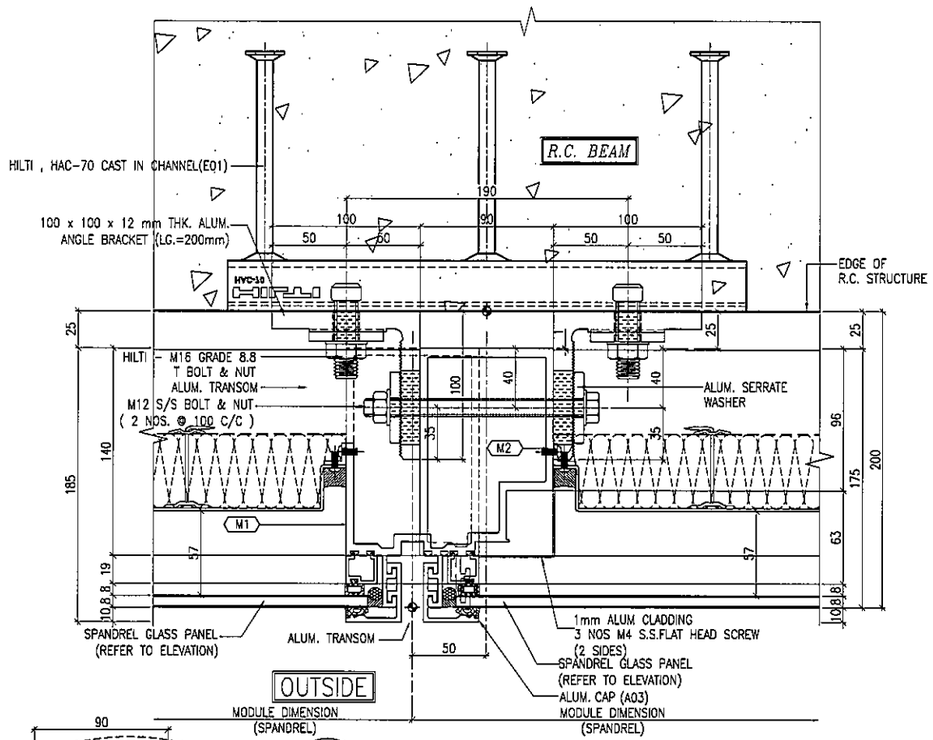

2 / 5021 TYPICAL MULLION DETAIL CURTAIN WALL

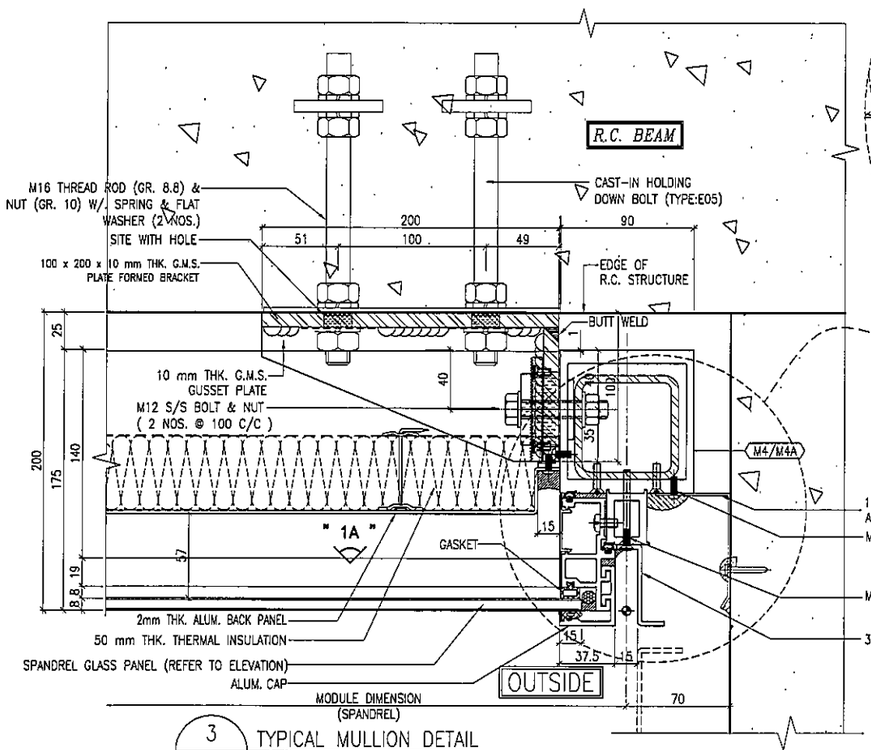

3 / 5021 TYPICAL MULLION DETAIL CURTAIN WALL

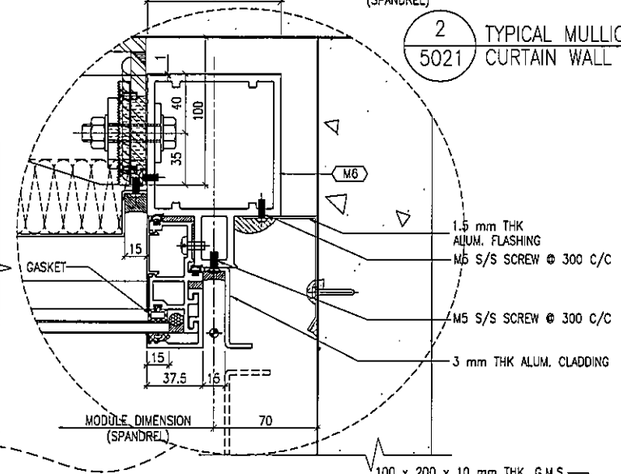

4 / 5021 TYPICAL MULLION DETAIL CURTAIN WALL

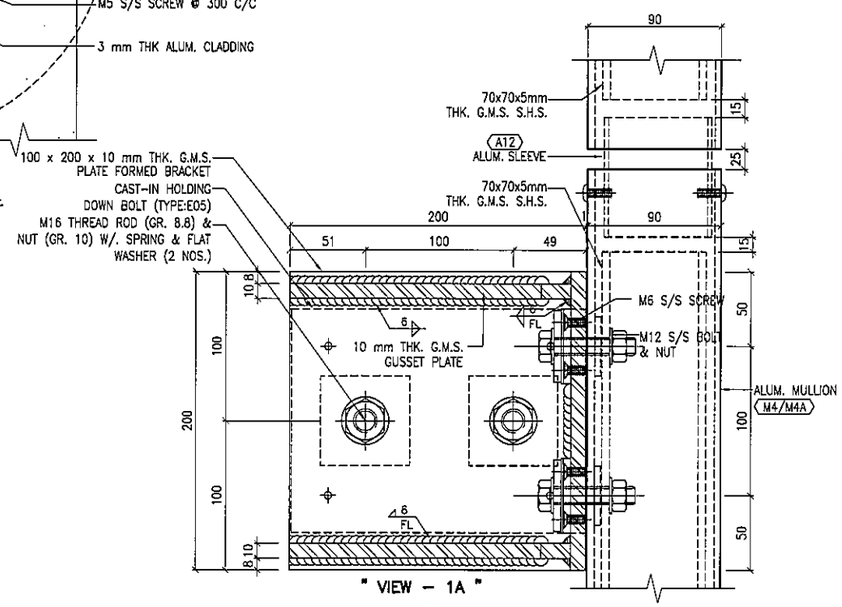

B.D. REF :

CLIENT :
信和置業有限公司
Sino Land Company Limited

ARCHITECT :
WONG TUNG & PARTNERS LIMITED
ARCHITECTS & PLANNERS

MAIN CONTRACTOR :
CR Construction Company Limited

STRUCTURAL ENGINEER :
AECOM

FACADE CONSULTANT:
AECOM

NOTE :
1. ALL DIMENSIONS ARE IN mm.
2. ALL ELEVATIONS ARE VIEWED FROM OUTSIDE.
3. ALL DIMENSIONS TO BE VERIFIED ON SITE BEFORE FABRICATION.

LEGEND :
X1 / X001 — DETAIL MARK NO. / REFER SHEET NO.
1. F.F.L. --FINISHED FLOOR LEVEL
2. S.F.L. --STRUCTURAL FLOOR LEVEL
3. /R --REVERSED DETAIL

NO.	DATE	REVISED	BY

JOB NO. : J-837

PROJECT :
URA KWUN TONG TOWN CENTRE REDEVELOPMENT (AREA 2 & 3) AT NKIL 6514, KWUN TONG, KWLOON

TITLE :
TYPICAL MULLION DETAIL FOR CURTAIN WALL

DATE : 28-JAN-19 | SCALE : 1:2 (A1)

DRAWN BY : ASING | CHECKED BY : -

美特鋁質有限公司
MIDI ALUMINIUM FABRICATOR LTD.
Units 6-8, Sunray Industrial Centre, 1/F
610 Cha Kwo Ling Road, Kowloon
Tel:23489211-4 Fax:(852)27727666

DWG NO. : J837-CW-5021 | REV. : -

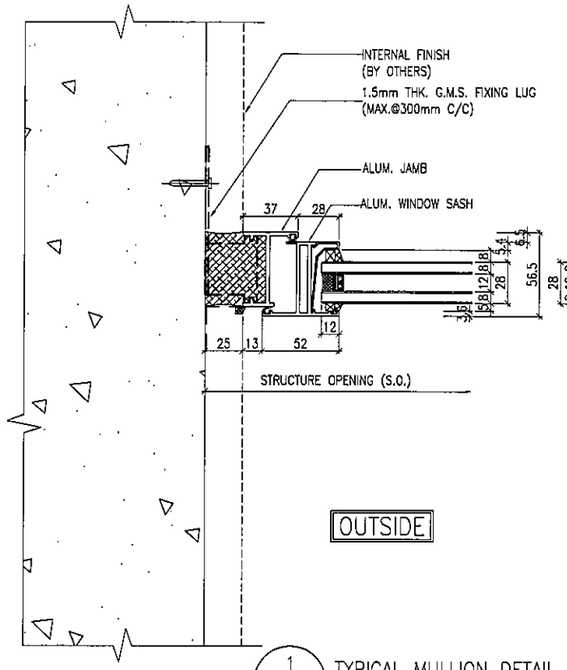

1 / 5022 TYPICAL MULLION DETAIL CURTAIN WALL

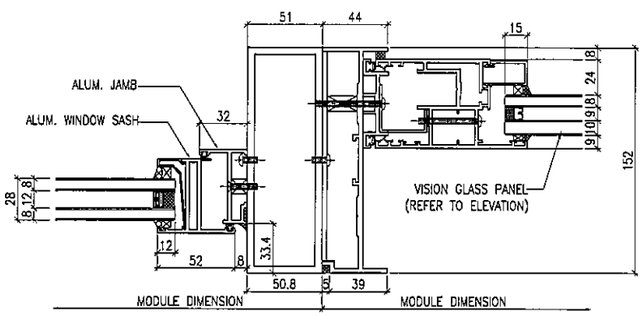

2 / 5022 TYPICAL MULLION DETAIL CURTAIN WALL

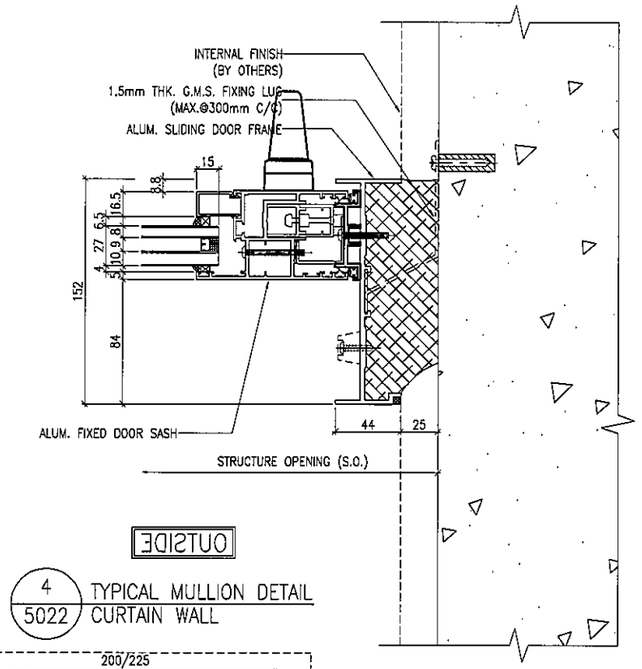

4 / 5022 TYPICAL MULLION DETAIL CURTAIN WALL

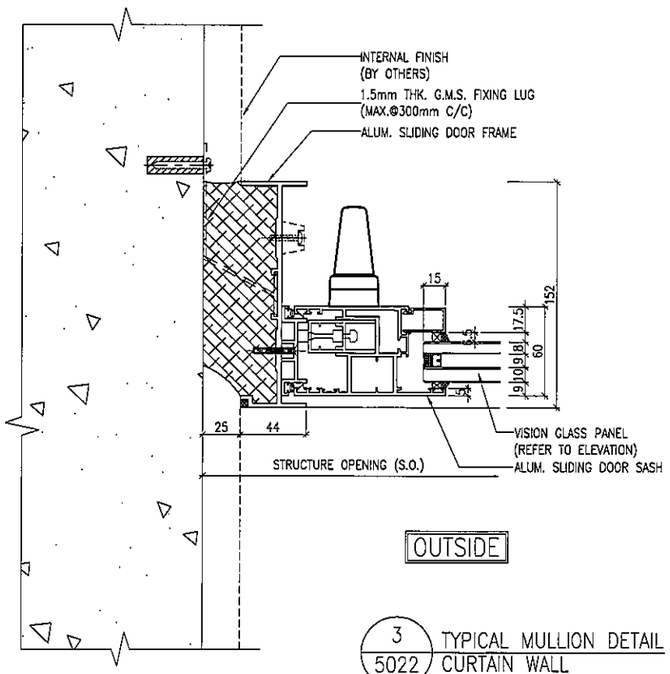

3 / 5022 TYPICAL MULLION DETAIL CURTAIN WALL

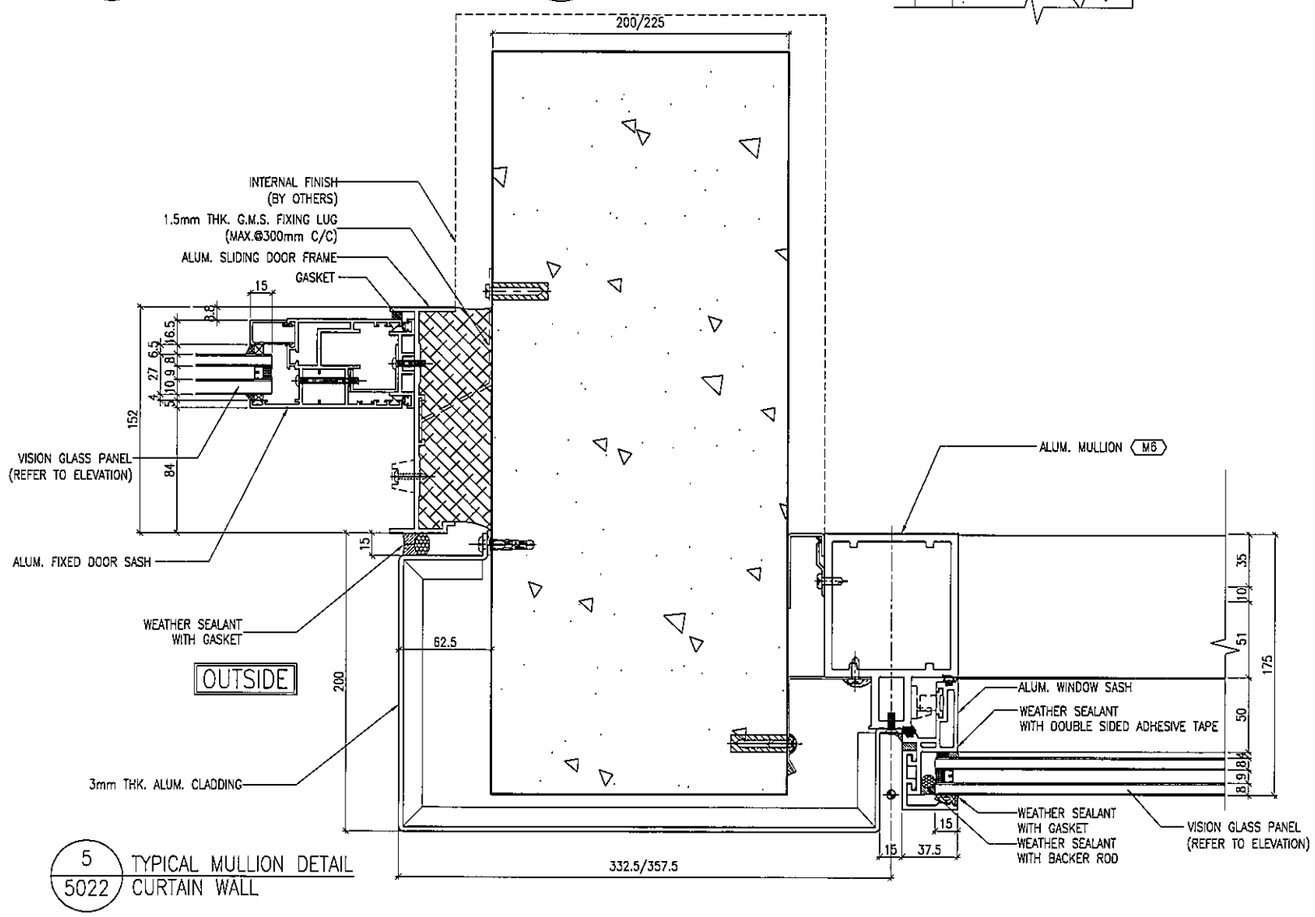

5 / 5022 TYPICAL MULLION DETAIL CURTAIN WALL

B.D. REF :

CLIENT :
信和置業有限公司
Sino Land Company Limited

ARCHITECT :
WONG TUNG & PARTNERS LIMITED
ARCHITECTS & PLANNERS

MAIN CONTRACTOR :
CR Construction Company Limited

STRUCTURAL ENGINEER :
AECOM

FACADE CONSULTANT:
AECOM

NOTE :
1. ALL DIMENSIONS ARE IN mm.
2. ALL ELEVATIONS ARE VIEWED FROM OUTSIDE.
3. ALL DIMENSIONS TO BE VERIFIED ON SITE BEFORE FABRICATION.

LEGEND :
X1 / X091 — DETAIL MARK NO. / REFER SHEET NO.
1. F.F.L. --FINISHED FLOOR LEVEL
2. S.F.L. --STRUCTURAL FLOOR LEVEL
3. /R --REVERSED DETAIL

NO.	DATE	REVISED	BY

JOB NO. : J-837

PROJECT :
URA KWUN TONG TOWN CENTRE
REDEVELOPMENT (AREA 2 & 3) AT
NKIL 6514, KWUN TONG, KWLOON

TITLE :
TYPICAL MULLION DETAIL
FOR CURTAIN WALL

DATE : 16-JUL-19	SCALE : 1:2 (A1)
DRAWN BY : ASING	CHECKED BY : -

美特鋁質有限公司
MIDI ALUMINIUM FABRICATOR LTD.
Units 6-8, Sunray Industrial Centre, 1/F
610 Cha Kwo Ling Road, Kowloon
Tel:23489211-4 Fax:(852)27727666

DWG NO. : J837-CW-5022 | REV. : -

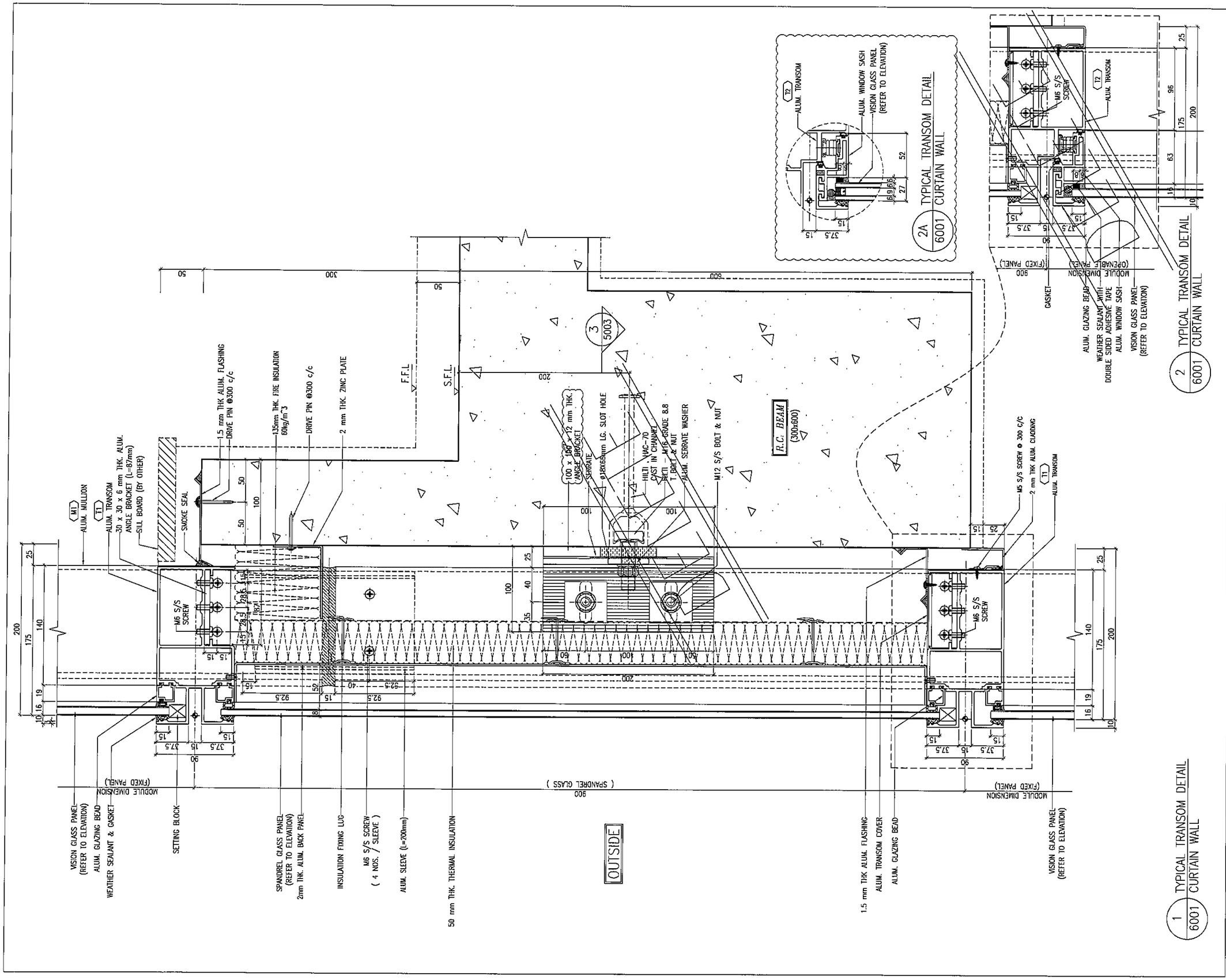

B.D. REF :

CLIENT :
信和置業有限公司
Sino Land Company Limited

ARCHITECT :
WONG TUNG & PARTNERS LIMITED
ARCHITECTS & PLANNERS

MAIN CONTRACTOR :
CR Construction Company Limited

STRUCTURAL ENGINEER :
AECOM

FACADE CONSULTANT:
AECOM

NOTE :
1. ALL DIMENSIONS ARE IN mm.
2. ALL ELEVATIONS ARE VIEWED FROM OUTSIDE.
3. ALL DIMENSIONS TO BE VERIFIED ON SITE BEFORE FABRICATION.

LEGEND :
X1 / X001 — DETAIL MARK NO. / REFER SHEET NO.
1. F.F.L. --FINISHED FLOOR LEVEL
2. S.F.L. --STRUCTURAL FLOOR LEVEL
3. /R --REVERSED DETAIL

NO.	DATE	REVISED	BY
B	24/11/2018	GENERAL REVISED	
A	10/9/2018	GENERAL REVISED	

JOB NO. : J-837

PROJECT :
URA KWUN TONG TOWN CENTRE REDEVELOPMENT (AREA 2 & 3) AT NKIL 6514, KWUN TONG, KWLOON

TITLE :
TYPICAL TRANSOM DETAIL FOR CURTAIN WALL

DATE : 13-JUL-18 | SCALE : 1:2 (A1)

DRAWN BY : ASING | CHECKED BY : -

美特鋁質有限公司
MIDI ALUMINIUM FABRICATOR LTD.
Units 6-8, Sunray Industrial Centre, 1/F
610 Cha Kwo Ling Road, Kowloon
Tel:23489211-4 Fax:(852)27727666

DWG NO. : J837-CW-6001 | REV. : B

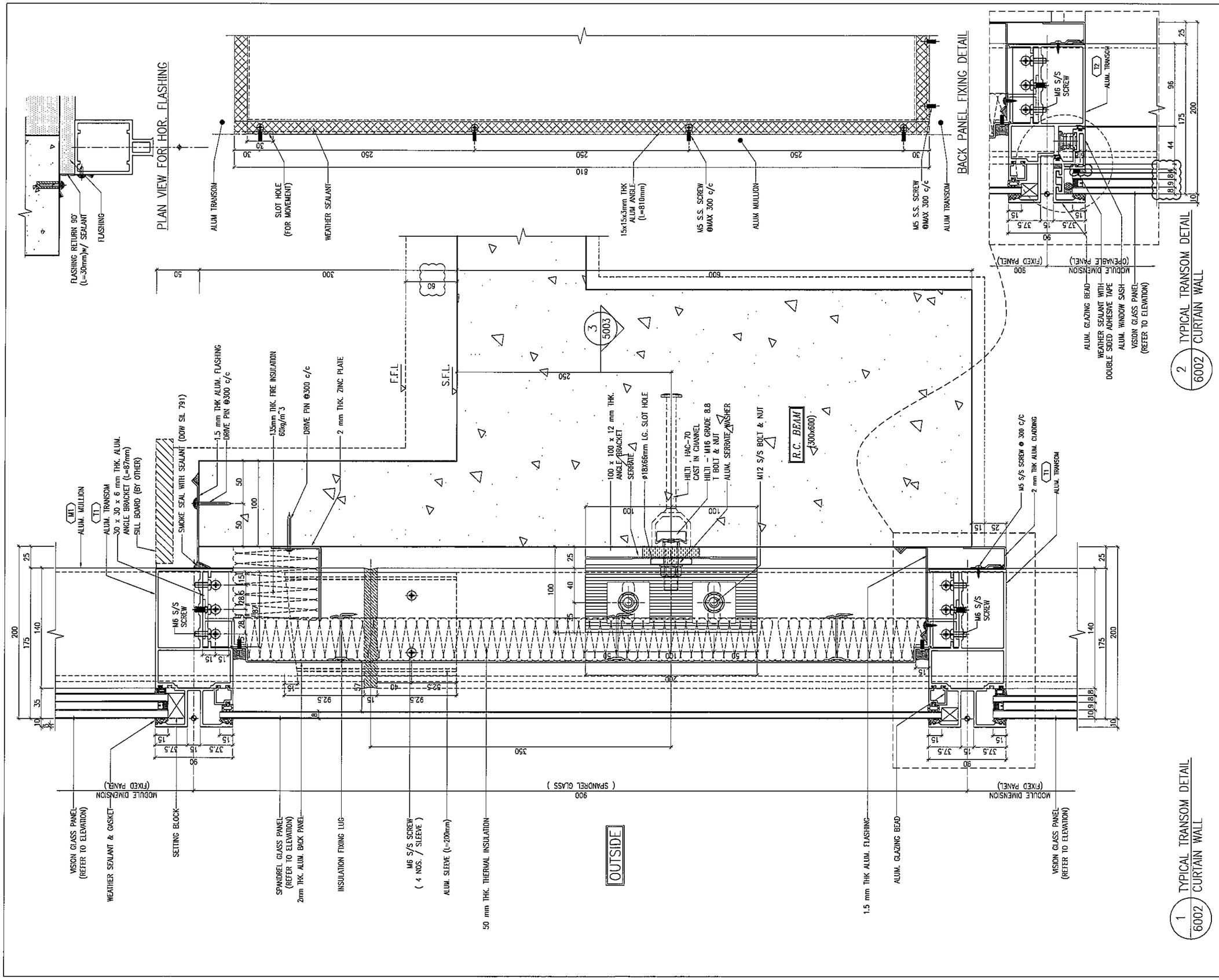

B.D. REF :

CLIENT :
信和置業有限公司
Sino Land Company Limited

ARCHITECT :
WONG TUNG & PARTNERS LIMITED
ARCHITECTS & PLANNERS

MAIN CONTRACTOR :
CR Construction Company Limited

STRUCTURAL ENGINEER :
AECOM

FACADE CONSULTANT:
AECOM

NOTE :
1. ALL DIMENSIONS ARE IN mm.
2. ALL ELEVATIONS ARE VIEWED FROM OUTSIDE.
3. ALL DIMENSIONS TO BE VERIFIED ON SITE BEFORE FABRICATION.

LEGEND :
X1 — DETAIL MARK NO.
X001 — REFER SHEET NO.
1. F.F.L. --FINISHED FLOOR LEVEL
2. S.F.L. --STRUCTURAL FLOOR LEVEL
3. (R) --REVERSED DETAIL

NO.	DATE	REVISED	BY
E	15/02/2019	GENERAL REVISED	
D	22/12/2018	GENERAL REVISED	
C	04/12/2018	GENERAL REVISED	
B	24/11/2018	GENERAL REVISED	
A	10/9/2018	GENERAL REVISED	

JOB NO. : J-837

PROJECT :
URA KWUN TONG TOWN CENTRE REDEVELOPMENT (AREA 2 & 3) AT NKIL 6514, KWUN TONG, KWLOON

TITLE :
TYPICAL TRANSOM DETAIL FOR CURTAIN WALL

DATE : 13-JUL-18 | SCALE : 1:2 (A1)

DRAWN BY : ASING | CHECKED BY : -

美特鋁製有限公司
MIDI ALUMINIUM FABRICATOR LTD.
Units 6-8, Sunray Industrial Centre, 1/F
610 Cha Kwo Ling Road, Kowloon
Tel:23489211-4 Fax:(852)27727666

DWG NO. : J837-CW-6002 | REV. : E

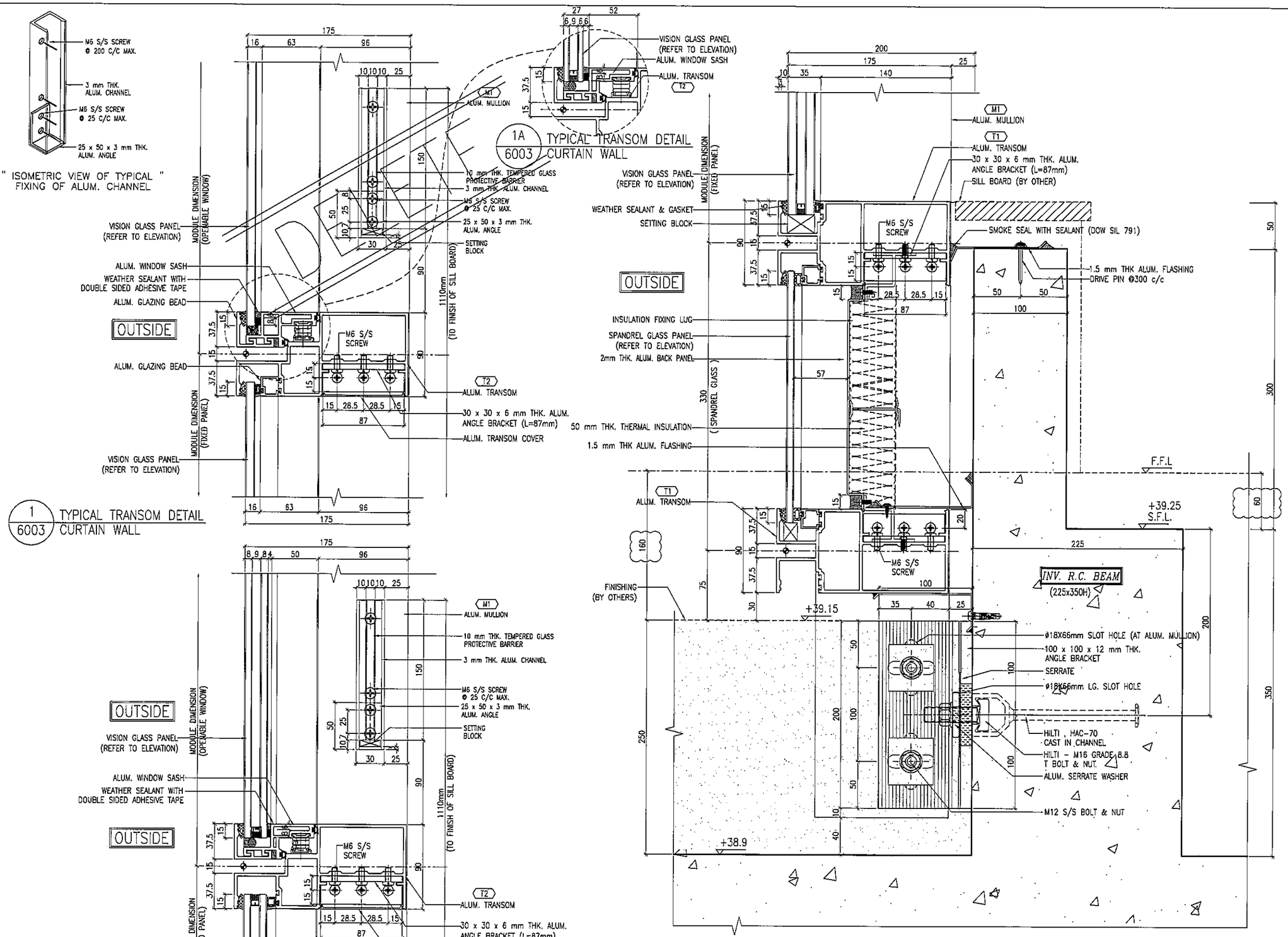

B.D. REF :

CLIENT :
信和置業有限公司
Sino Land Company Limited

ARCHITECT :
WONG TUNG & PARTNERS LIMITED
ARCHITECTS & PLANNERS

MAIN CONTRACTOR :
CR Construction Company Limited

STRUCTURAL ENGINEER :
AECOM

FACADE CONSULTANT:
AECOM

NOTE :
1. ALL DIMENSIONS ARE IN mm.
2. ALL ELEVATIONS ARE VIEWED FROM OUTSIDE.
3. ALL DIMENSIONS TO BE VERIFIED ON SITE BEFORE FABRICATION.

LEGEND :
X1 / X001 — DETAIL MARK NO. / REFER SHEET NO.
1. F.F.L. --FINISHED FLOOR LEVEL
2. S.F.L. --STRUCTURAL FLOOR LEVEL
3. /R --REVERSED DETAIL

NO.	DATE	REVISED	BY
D	15/02/2019	GENERAL REVISED	
C	22/12/2018	GENERAL REVISED	
B	24/11/2018	GENERAL REVISED	
A	10/9/2018	GENERAL REVISED	

JOB NO. : J-837

PROJECT :
URA KWUN TONG TOWN CENTRE REDEVELOPMENT (AREA 2 & 3) AT NKIL 6514, KWUN TONG, KWLOON

TITLE :
TYPICAL TRANSOM DETAIL FOR CURTAIN WALL

DATE : 13-JUL-18 | SCALE : 1:2 (A1)
DRAWN BY : Asing | CHECKED BY : -

美特鋁質有限公司
MIDI ALUMINIUM FABRICATOR LTD.
Units 6-8, Sunray Industrial Centre, 1/F
610 Cha Kwo Ling Road, Kowloon
Tel:23489211-4 Fax:(852)27727666

DWG NO. : J837-CW-6003 | REV. : D

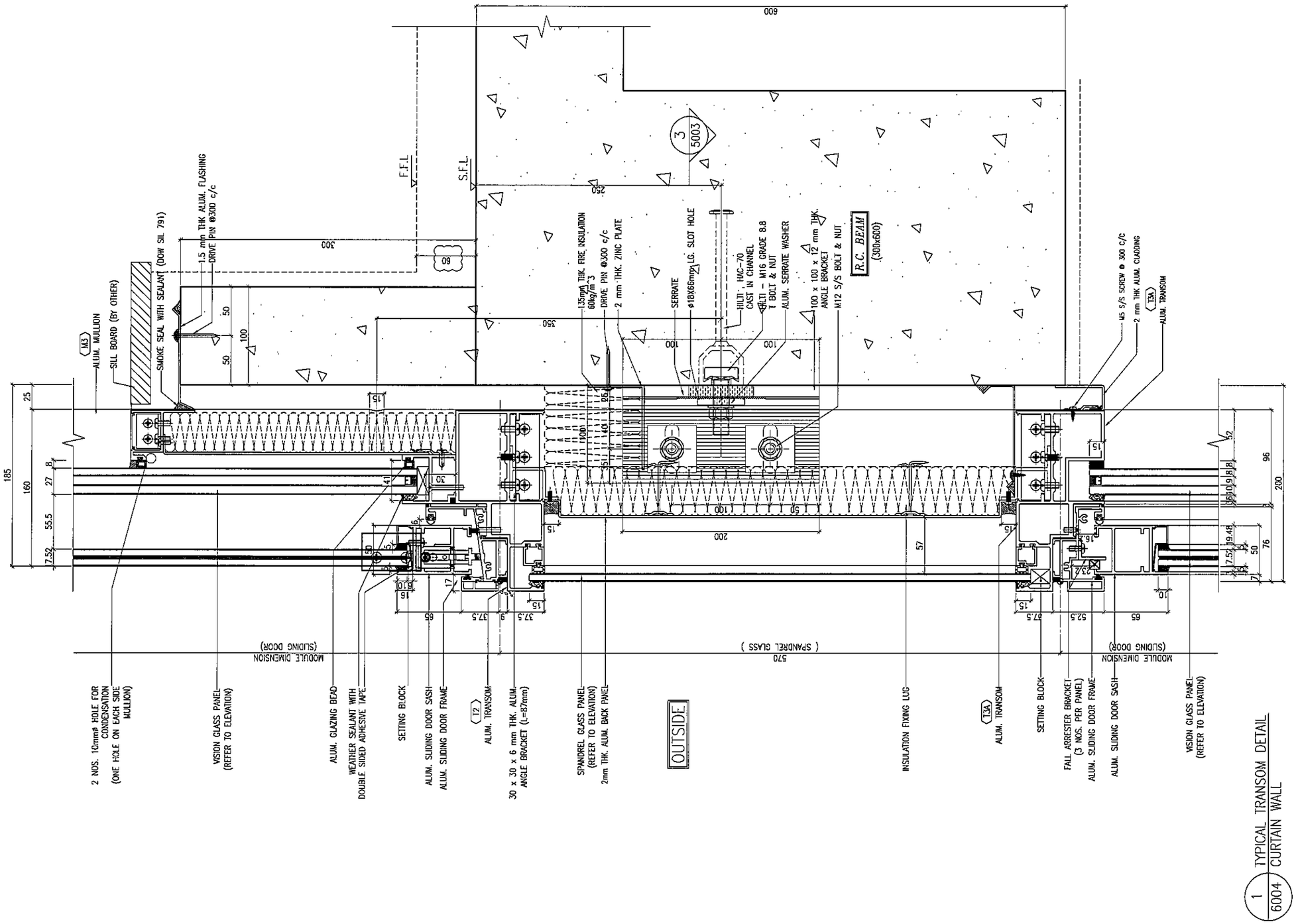

1 / 6004 TYPICAL TRANSOM DETAIL CURTAIN WALL

B.D. REF :

CLIENT :
信和置業有限公司
Sino Land Company Limited

ARCHITECT :
WONG TUNG & PARTNERS LIMITED
ARCHITECTS & PLANNERS

MAIN CONTRACTOR :
CR Construction Company Limited

STRUCTURAL ENGINEER :
AECOM

FACADE CONSULTANT:
AECOM

NOTE :
1. ALL DIMENSIONS ARE IN mm.
2. ALL ELEVATIONS ARE VIEWED FROM OUTSIDE.
3. ALL DIMENSIONS TO BE VERIFIED ON SITE BEFORE FABRICATION.

LEGEND :
- X1 / X001 — DETAIL MARK NO. / REFER SHEET NO.
1. F.F.L. --FINISHED FLOOR LEVEL
2. S.F.L. --STRUCTURAL FLOOR LEVEL
3. /R --REVERSED DETAIL

NO.	DATE	REVISED	BY
D	15/02/2019	GENERAL REVISED	
C	04/12/2018	GENERAL REVISED	
B	24/11/2018	GENERAL REVISED	
A	10/9/2018	GENERAL REVISED	

JOB NO. : J-837

PROJECT :
URA KWUN TONG TOWN CENTRE REDEVELOPMENT (AREA 2 & 3) AT NKIL 6514, KWUN TONG, KWLOON

TITLE :
TYPICAL TRANSOM DETAIL FOR CURTAIN WALL

DATE : 13-JUL-18 | SCALE : 1:2 (A1)

DRAWN BY : ASING | CHECKED BY : --

美特鋁製有限公司
MIDI ALUMINIUM FABRICATOR LTD.
Units 6-8, Sunray Industrial Centre, 1/F
610 Cha Kwo Ling Road, Kowloon
Tel:23489211-4 Fax:(852)27727666

DWG NO. : JB37-CW-6004 | REV. : D

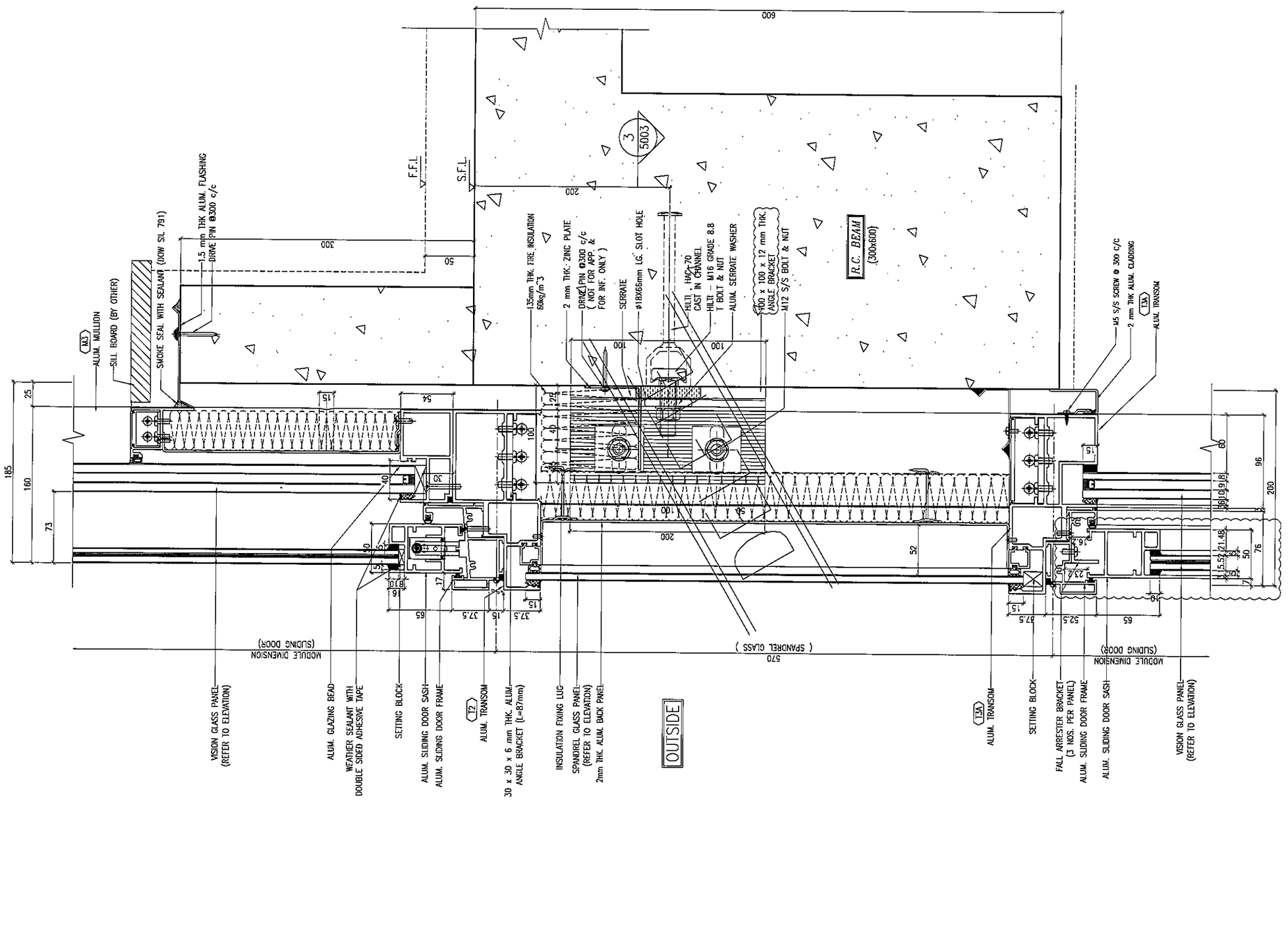

1 / 6005 TYPICAL TRANSOM DETAIL CURTAIN WALL

B.D. REF :

CLIENT :
信和置業有限公司
Sino Land Company Limited

ARCHITECT :
WONG TUNG & PARTNERS LIMITED
ARCHITECTS & PLANNERS

MAIN CONTRACTOR :
CR Construction Company Limited

STRUCTURAL ENGINEER :
AECOM

FACADE CONSULTANT:
AECOM

NOTE :
1. ALL DIMENSIONS ARE IN mm.
2. ALL ELEVATIONS ARE VIEWED FROM OUTSIDE.
3. ALL DIMENSIONS TO BE VERIFIED ON SITE BEFORE FABRICATION.

LEGEND :
X1 — DETAIL MARK NO.
X001 — REFER SHEET NO.

1. F.F.L. --FINISHED FLOOR LEVEL
2. S.F.L. --STRUCTURAL FLOOR LEVEL
3. (VR) --REVERSED DETAIL

NO.	DATE	REVISED	BY
B	24/11/2018	GENERAL REVISED	
A	10/9/2018	GENERAL REVISED	

JOB NO. : J-837

PROJECT :
URA KWUN TONG TOWN CENTRE REDEVELOPMENT (AREA 2 & 3) AT NKIL 6514, KWUN TONG, KWLOON

TITLE :
TYPICAL TRANSOM DETAIL FOR CURTAIN WALL

DATE : 13-JUL-18 | SCALE : 1:2 (A1)

DRAWN BY : ASING | CHECKED BY : –

美特鋁質有限公司
MIDI ALUMINIUM FABRICATOR LTD.
Units 6-8, Sunray Industrial Centre, 1/F
610 Cha Kwo Ling Road, Kowloon
Tel:23489211-4 Fax:(852)27727666

DWG NO. : J837-CW-6005 | REV. : B

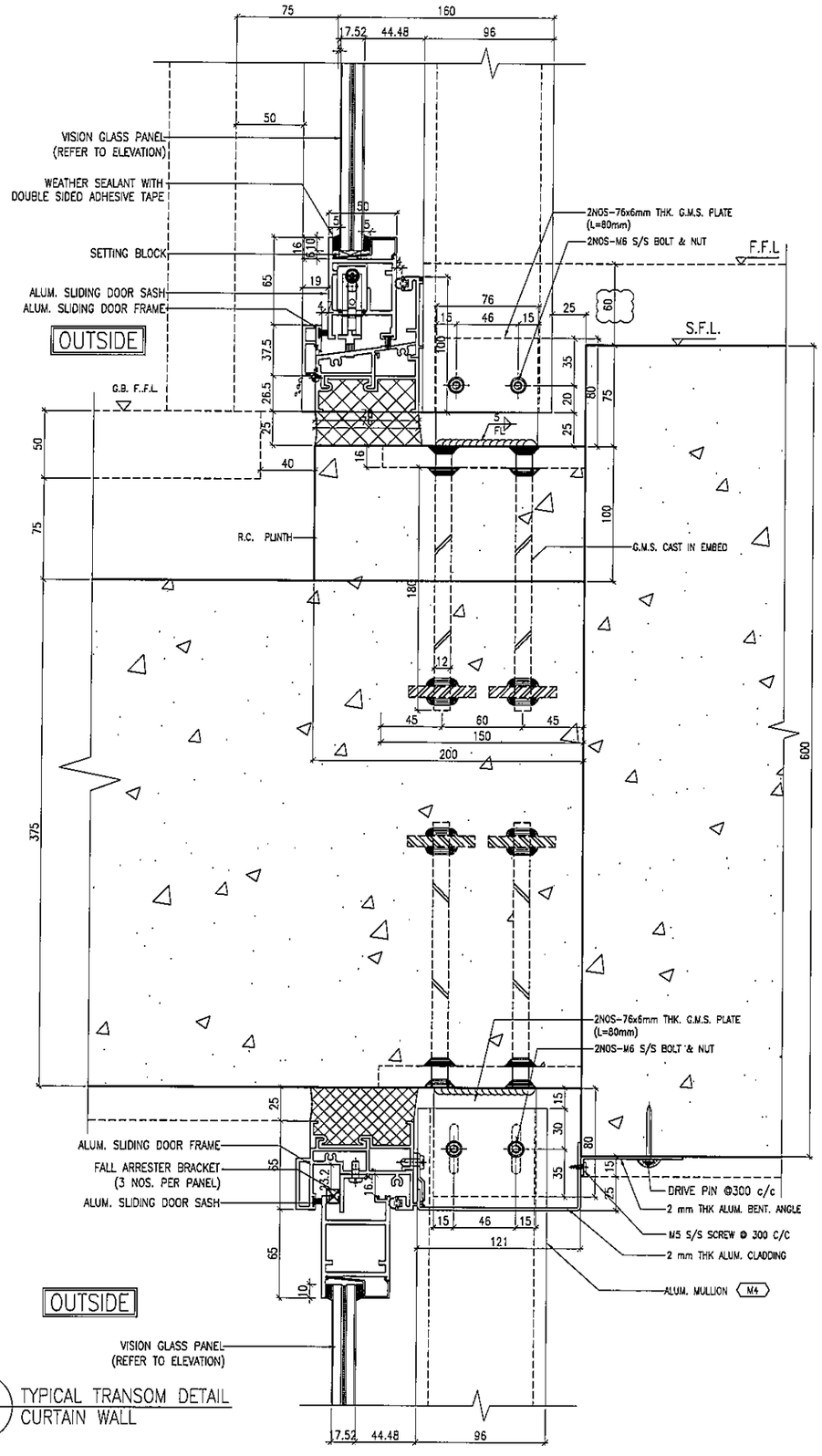

1 / 6006 TYPICAL TRANSOM DETAIL CURTAIN WALL

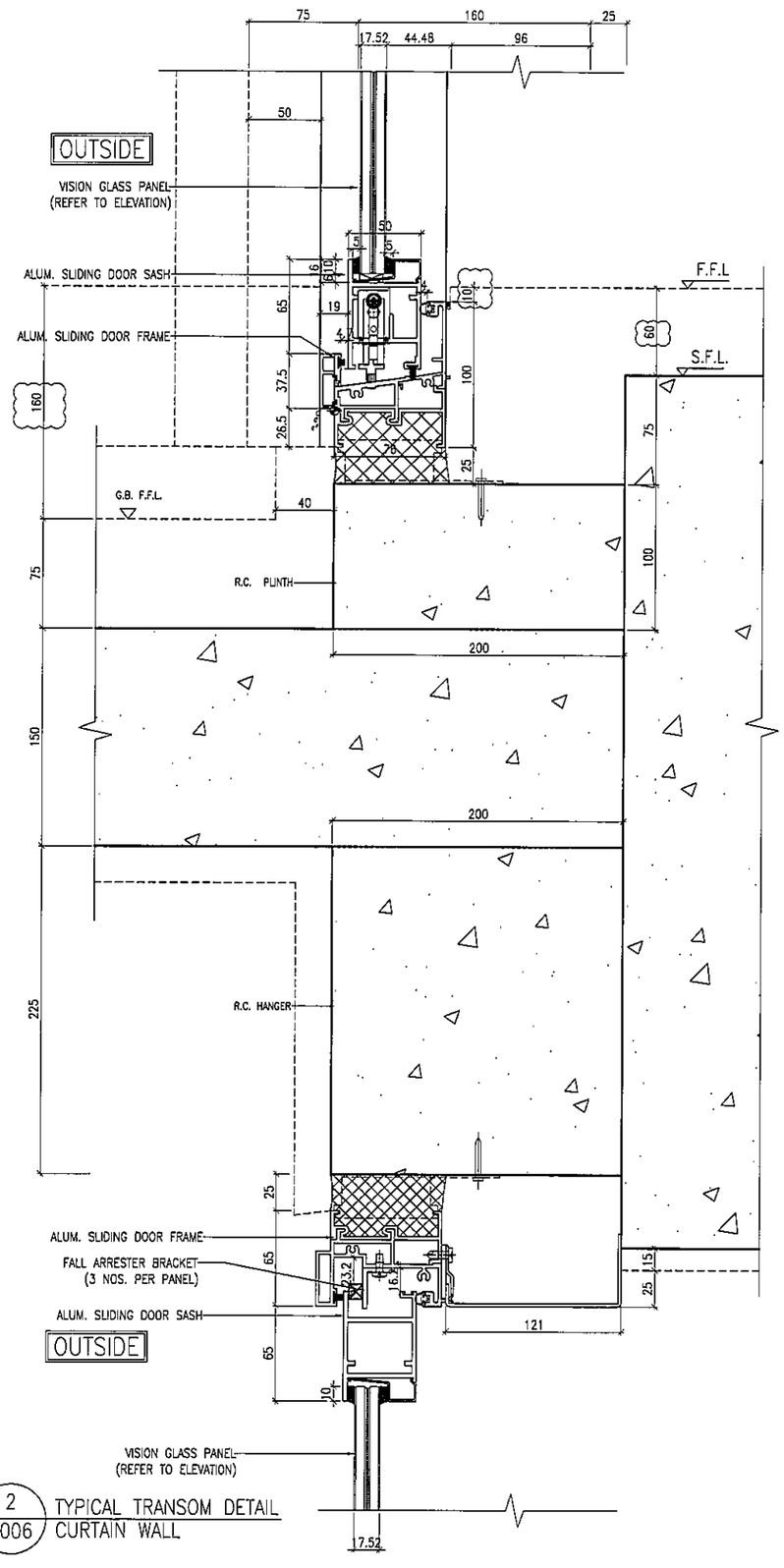

2 / 6006 TYPICAL TRANSOM DETAIL CURTAIN WALL

B.D. REF :

CLIENT :
信和置業有限公司
Sino Land Company Limited

ARCHITECT : WONG TUNG & PARTNERS LIMITED ARCHITECTS & PLANNERS

MAIN CONTRACTOR :
CR Construction Company Limited

STRUCTURAL ENGINEER : AECOM

FACADE CONSULTANT: AECOM

NOTE :
1. ALL DIMENSIONS ARE IN mm.
2. ALL ELEVATIONS ARE VIEWED FROM OUTSIDE.
3. ALL DIMENSIONS TO BE VERIFIED ON SITE BEFORE FABRICATION.

LEGEND :
X1 / X001 — DETAIL MARK NO. / REFER SHEET NO.
1. F.F.L. --FINISHED FLOOR LEVEL
2. S.F.L. --STRUCTURAL FLOOR LEVEL
3. (R) --REVERSED DETAIL

NO.	DATE	REVISED	BY
D	15/02/2019	GENERAL REVISED	
C	04/12/2018	GENERAL REVISED	
B	24/11/2018	GENERAL REVISED	
A	10/9/2018	GENERAL REVISED	

JOB NO. : J-837

PROJECT :
URA KWUN TONG TOWN CENTRE REDEVELOPMENT (AREA 2 & 3) AT NKIL 6514, KWUN TONG, KWLOON

TITLE :
TYPICAL TRANSOM DETAIL FOR CURTAIN WALL

DATE : 13-JUL-18 | SCALE : 1:2 (A1)

DRAWN BY : ASING | CHECKED BY : -

美特鋁質有限公司
MIDI ALUMINIUM FABRICATOR LTD.
Units 6-8, Sunray Industrial Centre, 1/F
610 Cha Kwo Ling Road, Kowloon
Tel:23489211-4 Fax:(852)27727666

DWG NO. : J837-CW-6006 | REV. : D

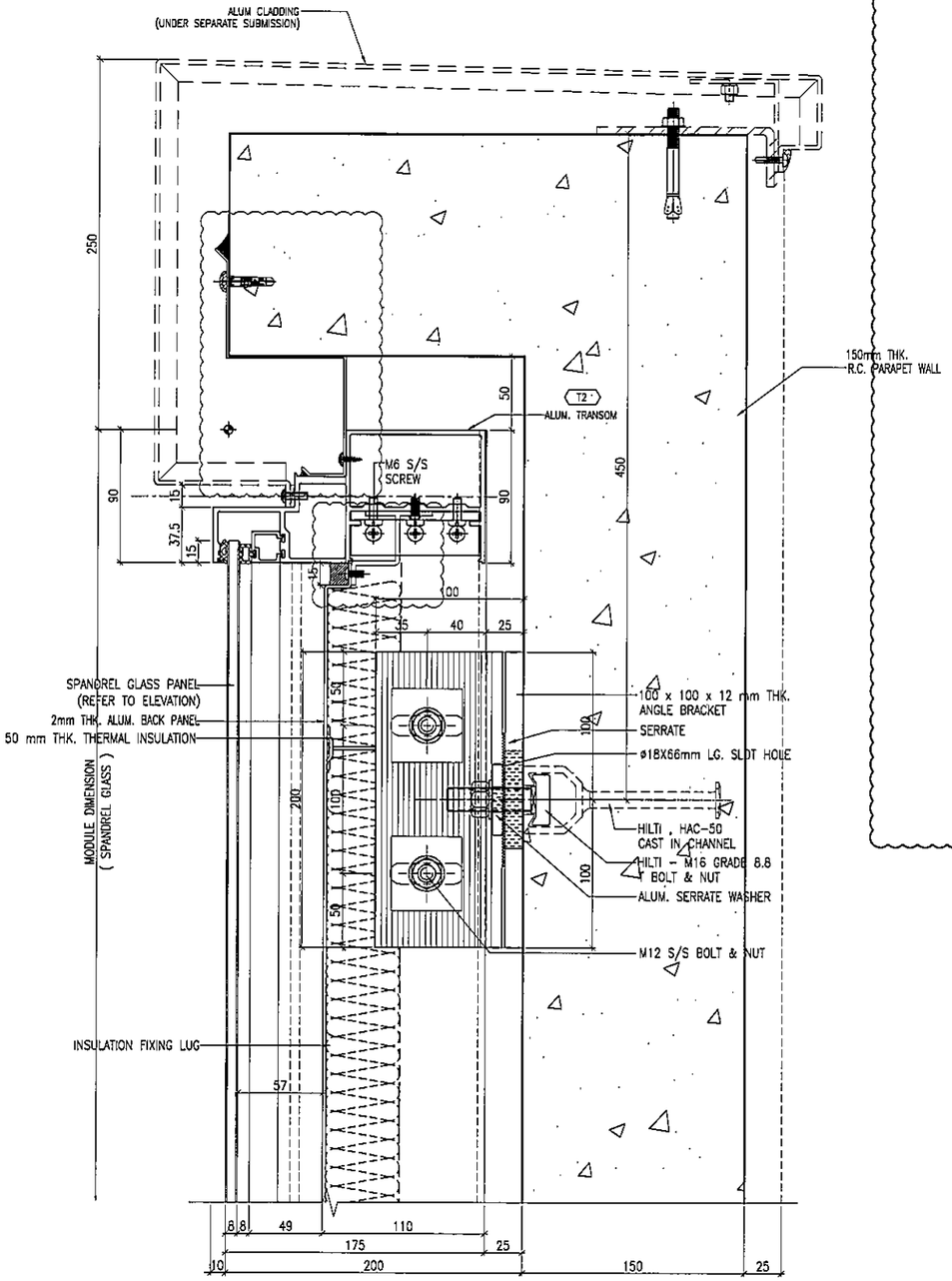

1 / 6007 TYPICAL TRANSOM DETAIL
CURTAIN WALL

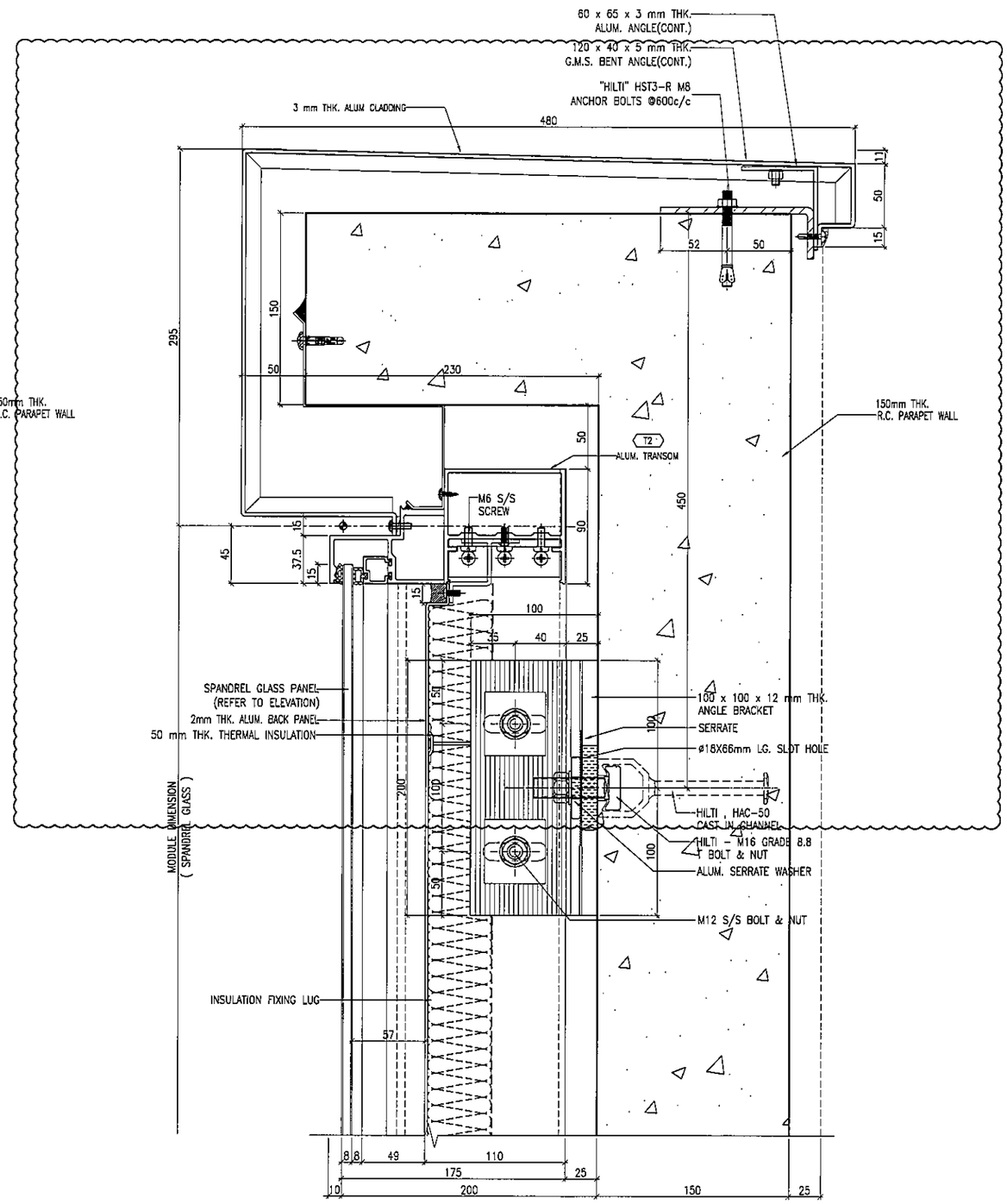

2 / 6007 TYPICAL TRANSOM DETAIL
CURTAIN WALL

B.D. REF :

CLIENT :
信和置業有限公司
Sino Land Company Limited

ARCHITECT :
WONG TUNG & PARTNERS LIMITED
ARCHITECTS & PLANNERS

MAIN CONTRACTOR :
CR Construction Company Limited

STRUCTURAL ENGINEER :
AECOM

FACADE CONSULTANT:
AECOM

NOTE :
1. ALL DIMENSIONS ARE IN mm.
2. ALL ELEVATIONS ARE VIEWED FROM OUTSIDE.
3. ALL DIMENSIONS TO BE VERIFIED ON SITE BEFORE FABRICATION.

LEGEND :
X1 / X@@1 — DETAIL MARK NO. / REFER SHEET NO.
1. F.F.L. --FINISHED FLOOR LEVEL
2. S.F.L. --STRUCTURAL FLOOR LEVEL
3. /R --REVERSED DETAIL

NO.	DATE	REVISED	BY
C	22/12/2018	GENERAL REVISED	
B	24/11/2018	GENERAL REVISED	
A	10/9/2018	GENERAL REVISED	

JOB NO. : J-837

PROJECT :
URA KWUN TONG TOWN CENTRE
REDEVELOPMENT (AREA 2 & 3) AT
NKIL 6514, KWUN TONG, KWLOON

TITLE :
TYPICAL TRANSOM DETAIL
FOR CURTAIN WALL

DATE : 13-JUL-18 | SCALE : 1:2 (A1)

DRAWN BY : ASING | CHECKED BY : --

美特鋁質有限公司
MIDI ALUMINIUM FABRICATOR LTD.
Units 6-8, Sunray Industrial Centre, 1/F
610 Cha Kwo Ling Road, Kowloon
Tel:23489211-4 Fax:(852)27727666

DWG NO. : J837-CW-6007 | REV. : C

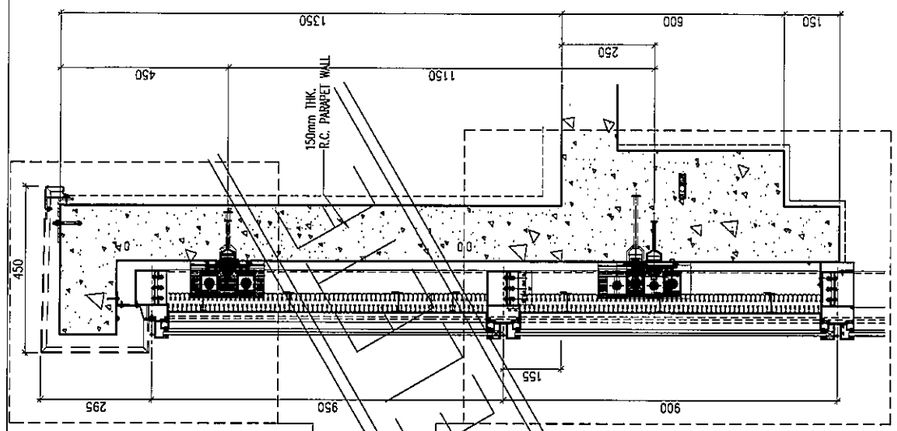

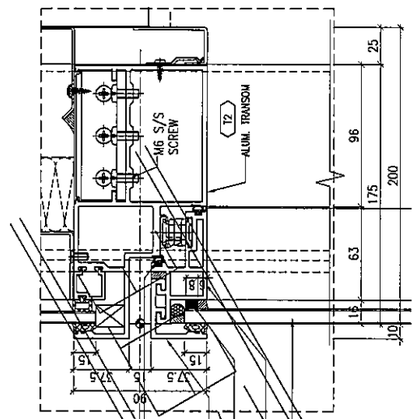

2 6008 TYPICAL TRANSOM DETAIL CURTAIN WALL

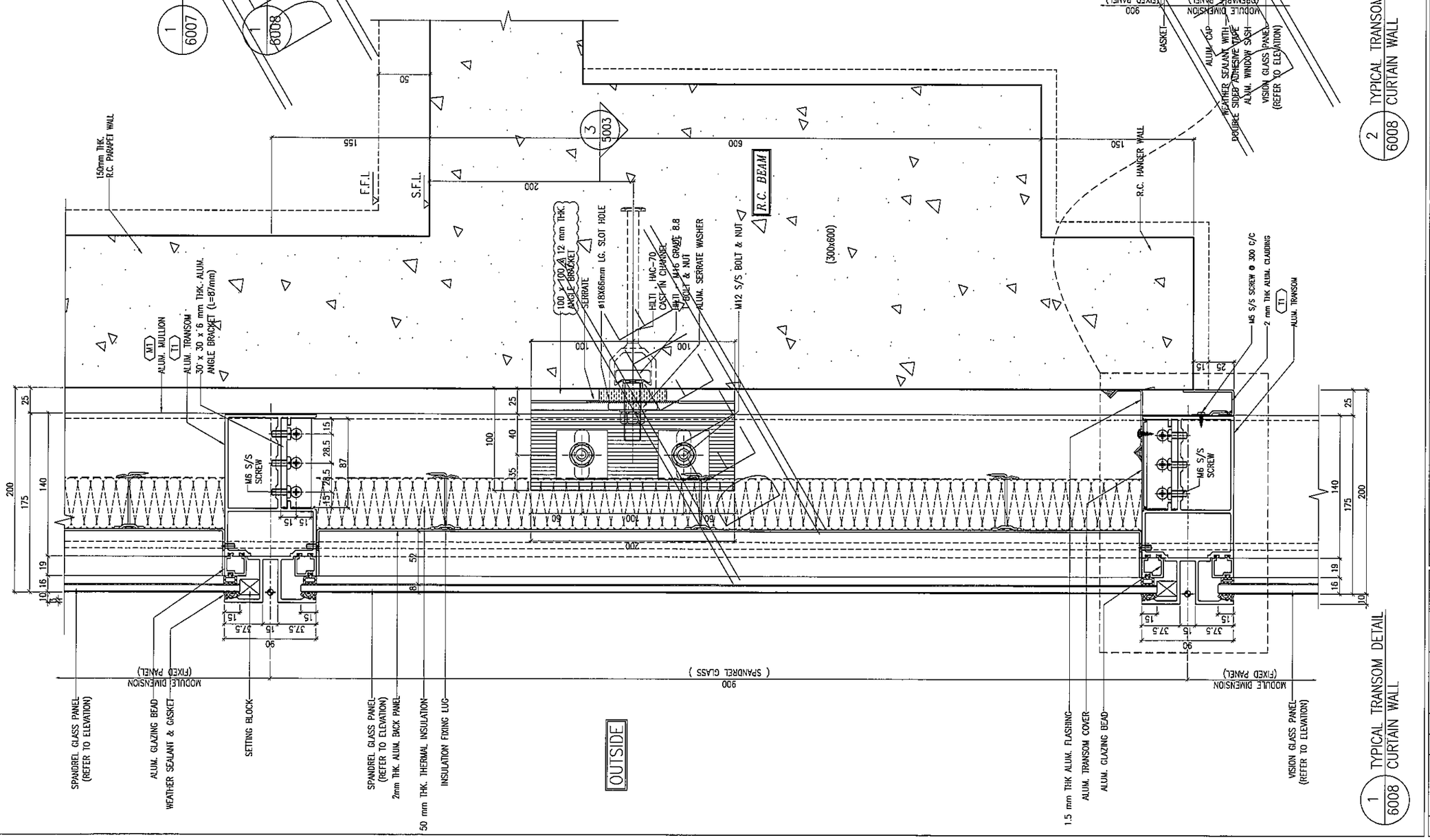

1 6008 TYPICAL TRANSOM DETAIL CURTAIN WALL

B.D. REF :

CLIENT :
信和置業有限公司
Sino Land Company Limited

ARCHITECT :
WONG TUNG & PARTNERS LIMITED
ARCHITECTS & PLANNERS

MAIN CONTRACTOR :
CR Construction Company Limited

STRUCTURAL ENGINEER :
AECOM

FACADE CONSULTANT:
AECOM

NOTE :
1. ALL DIMENSIONS ARE IN mm.
2. ALL ELEVATIONS ARE VIEWED FROM OUTSIDE.
3. ALL DIMENSIONS TO BE VERIFIED ON SITE BEFORE FABRICATION.

LEGEND :
X1 — DETAIL MARK NO.
XXX1 — REFER SHEET NO.

1. F.F.L. --FINISHED FLOOR LEVEL
2. S.F.L. --STRUCTURAL FLOOR LEVEL
3. (R) --REVERSED DETAIL

NO.	DATE	REVISED	BY
B	24/11/2018	GENERAL REVISED	
A	10/9/2018	GENERAL REVISED	

JOB NO. : J-837

PROJECT :
URA KWUN TONG TOWN CENTRE REDEVELOPMENT (AREA 2 & 3) AT NKIL 6514, KWUN TONG, KWLOON

TITLE :
TYPICAL TRANSOM DETAIL FOR CURTAIN WALL

DATE : 13-JUL-18 | SCALE : 1:2 (A1)

DRAWN BY : ASING | CHECKED BY : -

美特鋁質有限公司
MIDI ALUMINIUM FABRICATOR LTD.
Units 6-8, Sunray Industrial Centre, 1/F
610 Cha Kwo Ling Road, Kowloon
Tel:23489211-4 Fax:(852)27727666

DWG NO. : J837-CW-6008 | REV. : B

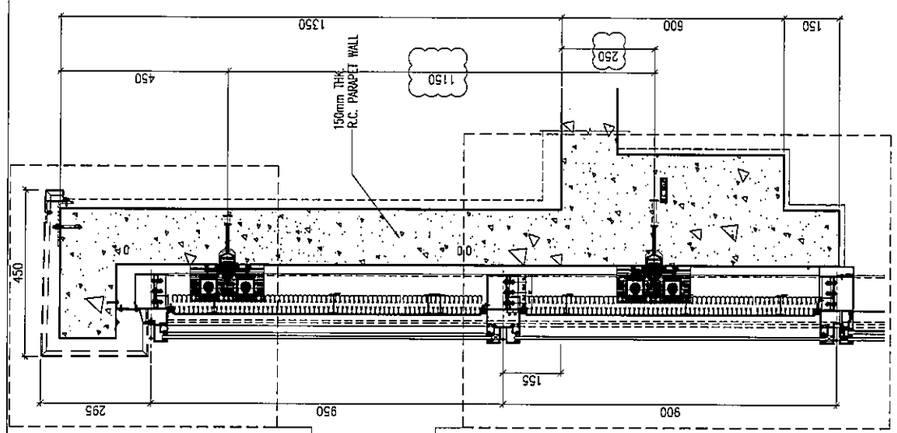

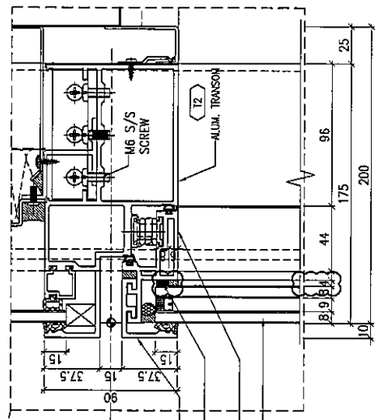

2 6009 TYPICAL TRANSOM DETAIL CURTAIN WALL

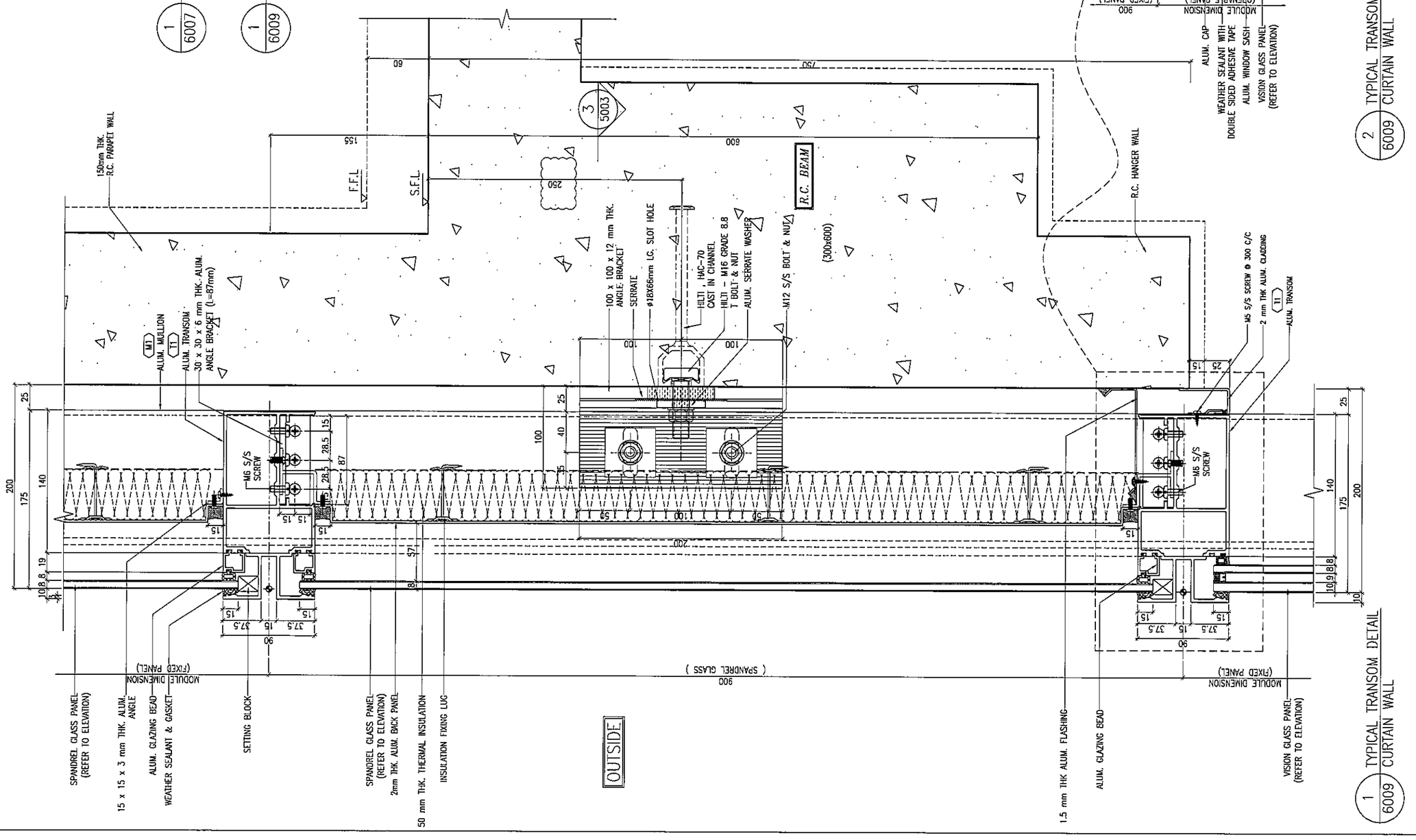

1 6009 TYPICAL TRANSOM DETAIL CURTAIN WALL

B.D. REF :

CLIENT :
信和置業有限公司
Sino Land Company Limited

ARCHITECT :
WONG TUNG & PARTNERS LIMITED
ARCHITECTS & PLANNERS

MAIN CONTRACTOR :
CR Construction Company Limited

STRUCTURAL ENGINEER :
AECOM

FACADE CONSULTANT:
AECOM

NOTE :
1. ALL DIMENSIONS ARE IN mm.
2. ALL ELEVATIONS ARE VIEWED FROM OUTSIDE.
3. ALL DIMENSIONS TO BE VERIFIED ON SITE BEFORE FABRICATION.

LEGEND :
X1 — DETAIL MARK NO.
X001 — REFER SHEET NO.

1. F.F.L. --FINISHED FLOOR LEVEL
2. S.F.L. --STRUCTURAL FLOOR LEVEL
3. (R) --REVERSED DETAIL

NO.	DATE	REVISED	BY
E	26/05/2019	GENERAL REVISED	
D	15/02/2019	GENERAL REVISED	
C	22/12/2018	GENERAL REVISED	
B	24/11/2018	GENERAL REVISED	
A	10/9/2018	GENERAL REVISED	

JOB NO. : J-837

PROJECT :
URA KWUN TONG TOWN CENTRE REDEVELOPMENT (AREA 2 & 3) AT NKIL 6514, KWUN TONG, KWLOON

TITLE :
TYPICAL TRANSOM DETAIL FOR CURTAIN WALL

DATE : 13-JUL-18 | SCALE : 1:2 (A1)

DRAWN BY : ASING | CHECKED BY : -

美特鋁質有限公司
MIDI ALUMINIUM FABRICATOR LTD.
Units 6-8, Sunray Industrial Centre, 1/F
610 Cha Kwo Ling Road, Kowloon
Tel:23489211-4 Fax:(852)27727666

DWG NO. : J837-CW-6009 | REV. : E

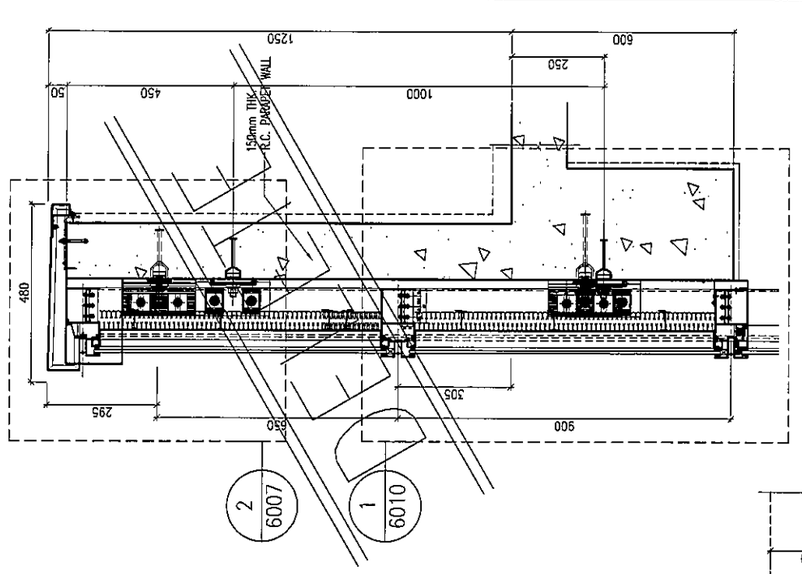

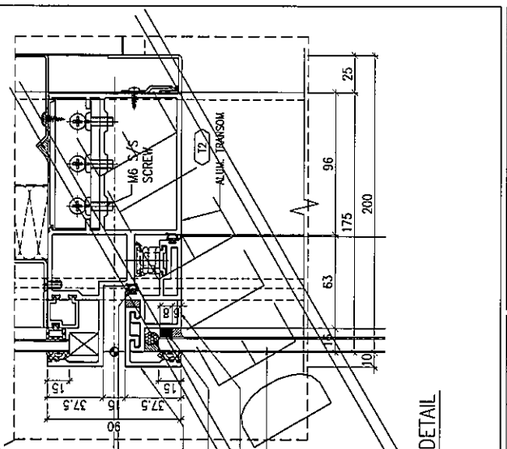

2 / 6010 TYPICAL TRANSOM DETAIL CURTAIN WALL

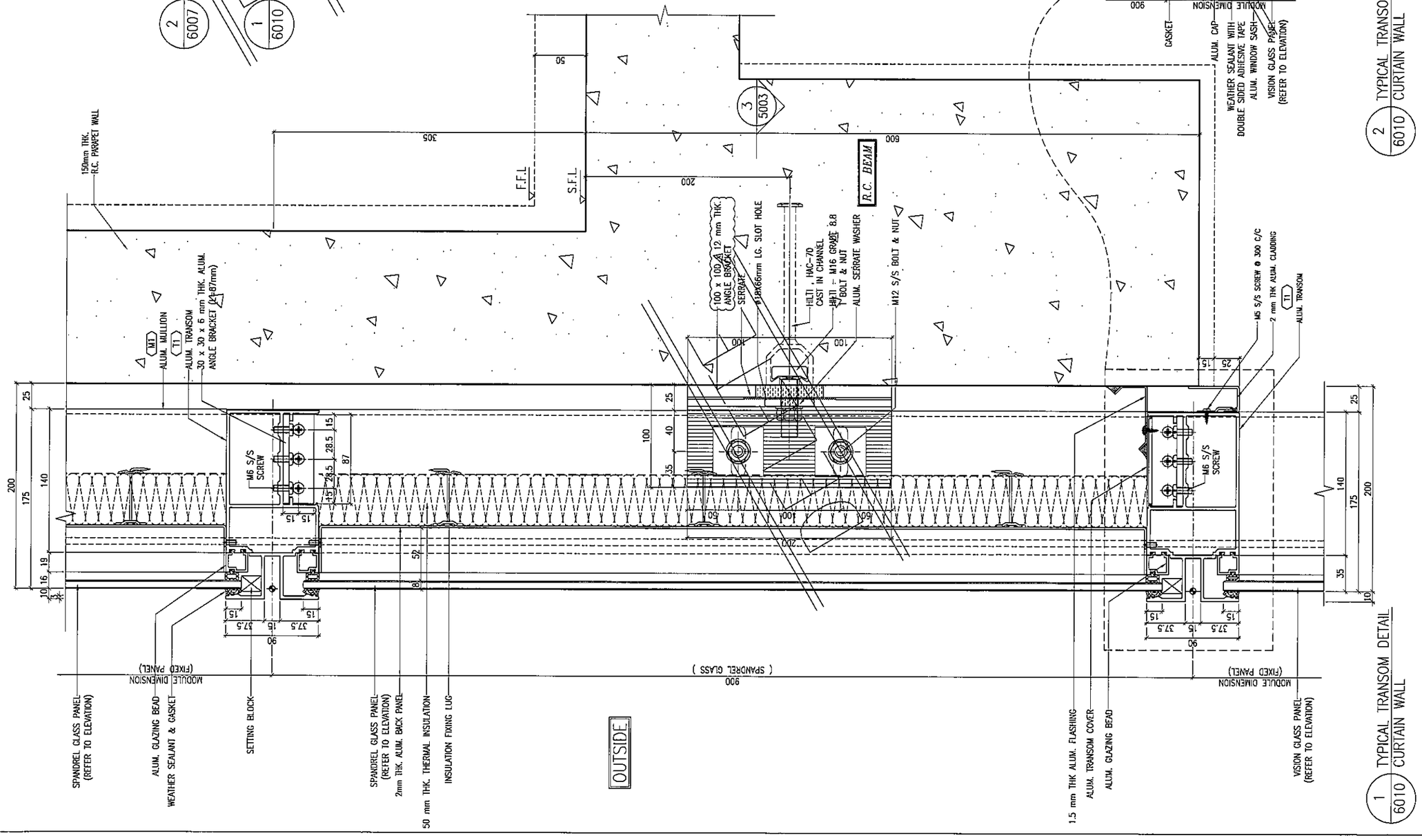

1 / 6010 TYPICAL TRANSOM DETAIL CURTAIN WALL

B.D. REF :

CLIENT :
信和置業有限公司
Sino Land Company Limited

ARCHITECT :
WONG TUNG & PARTNERS LIMITED
ARCHITECTS & PLANNERS

MAIN CONTRACTOR :
CR Construction Company Limited

STRUCTURAL ENGINEER :
AECOM

FACADE CONSULTANT:
AECOM

NOTE :
1. ALL DIMENSIONS ARE IN mm.
2. ALL ELEVATIONS ARE VIEWED FROM OUTSIDE.
3. ALL DIMENSIONS TO BE VERIFIED ON SITE BEFORE FABRICATION.

LEGEND :
- X1 / X001 — DETAIL MARK NO. / REFER SHEET NO.
1. F.F.L. --FINISHED FLOOR LEVEL
2. S.F.L. --STRUCTURAL FLOOR LEVEL
3. /R --REVERSED DETAIL

NO.	DATE	REVISED	BY
B	24/11/2018	GENERAL REVISED	
A	10/9/2018	GENERAL REVISED	

JOB NO. : J-837

PROJECT :
URA KWUN TONG TOWN CENTRE REDEVELOPMENT (AREA 2 & 3) AT NKIL 6514, KWUN TONG, KWLOON

TITLE :
TYPICAL TRANSOM DETAIL FOR CURTAIN WALL

DATE : 13-JUL-18 | SCALE : 1:2 (A1)

DRAWN BY : ASING | CHECKED BY : –

美特鋁質有限公司
MIDI ALUMINIUM FABRICATOR LTD.
Units 6-8, Sunray Industrial Centre, 1/F
610 Cha Kwo Ling Road, Kowloon
Tel:23489211-4 Fax:(852)27727686

DWG NO. : J837-CW-6010 | REV. : B

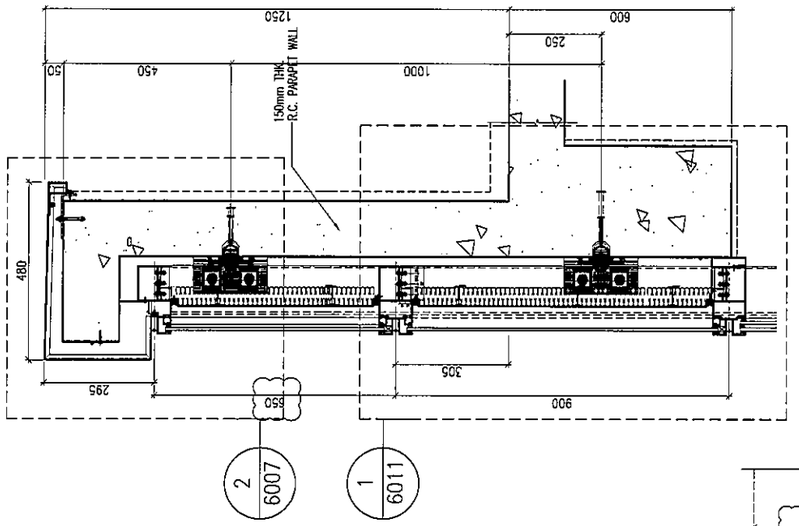

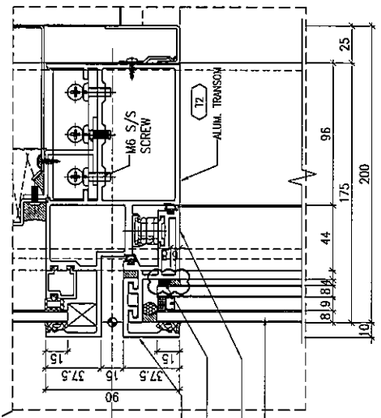

2 / 6011 TYPICAL TRANSOM DETAIL CURTAIN WALL

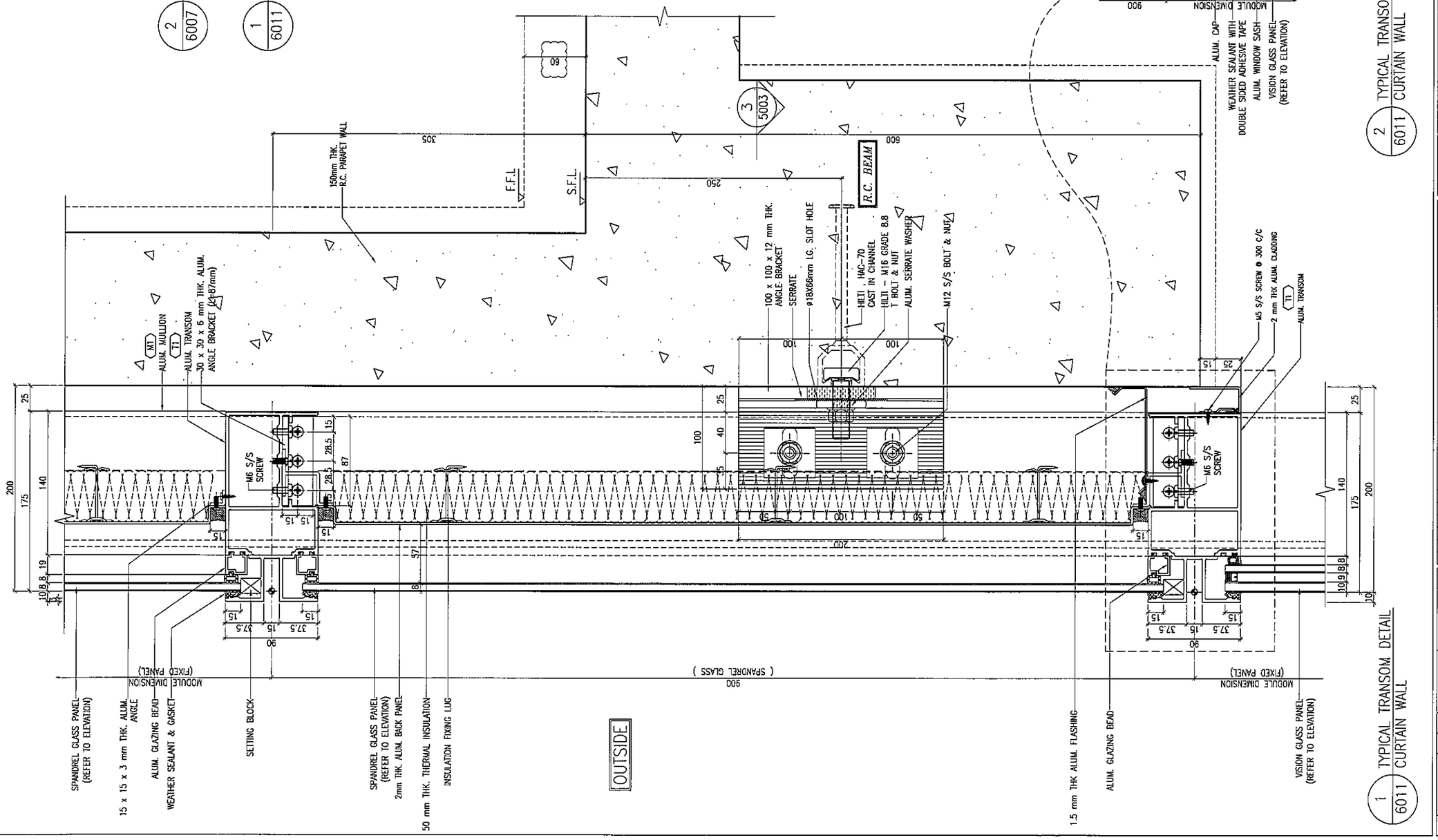

1 / 6011 TYPICAL TRANSOM DETAIL CURTAIN WALL

B.D. REF :

CLIENT :
信和置業有限公司
Sino Land Company Limited

ARCHITECT :
WONG TUNG & PARTNERS LIMITED
ARCHITECTS & PLANNERS

MAIN CONTRACTOR :
CR Construction Company Limited

STRUCTURAL ENGINEER :
AECOM

FACADE CONSULTANT:
AECOM

NOTE :
1. ALL DIMENSIONS ARE IN mm.
2. ALL ELEVATIONS ARE VIEWED FROM OUTSIDE.
3. ALL DIMENSIONS TO BE VERIFIED ON SITE BEFORE FABRICATION.

LEGEND :
X1 / X001 — DETAIL MARK NO. / REFER SHEET NO.
1. F.F.L. --FINISHED FLOOR LEVEL
2. S.F.L. --STRUCTURAL FLOOR LEVEL
3. /R --REVERSED DETAIL

NO	DATE	REVISED	BY
E	15/02/2019	GENERAL REVISED	
D	09/01/2019	GENERAL REVISED	
C	22/12/2018	GENERAL REVISED	
B	24/11/2018	GENERAL REVISED	
A	10/9/2018	GENERAL REVISED	

JOB NO. : J-837

PROJECT :
URA KWUN TONG TOWN CENTRE REDEVELOPMENT (AREA 2 & 3) AT NKIL 6514, KWUN TONG, KWLOON

TITLE :
TYPICAL TRANSOM DETAIL FOR CURTAIN WALL

DATE : 13-JUL-18 | SCALE : 1:2 (A1)

DRAWN BY : ASING | CHECKED BY : -

美特鋁製有限公司
MIDI ALUMINIUM FABRICATOR LTD.
Units 6-8, Sunray Industrial Centre, 1/F
610 Cha Kwo Ling Road, Kowloon
Tel:23489211-4 Fax:(852)27727666

DWG NO. : JB37-CW-6011 | REV. : E

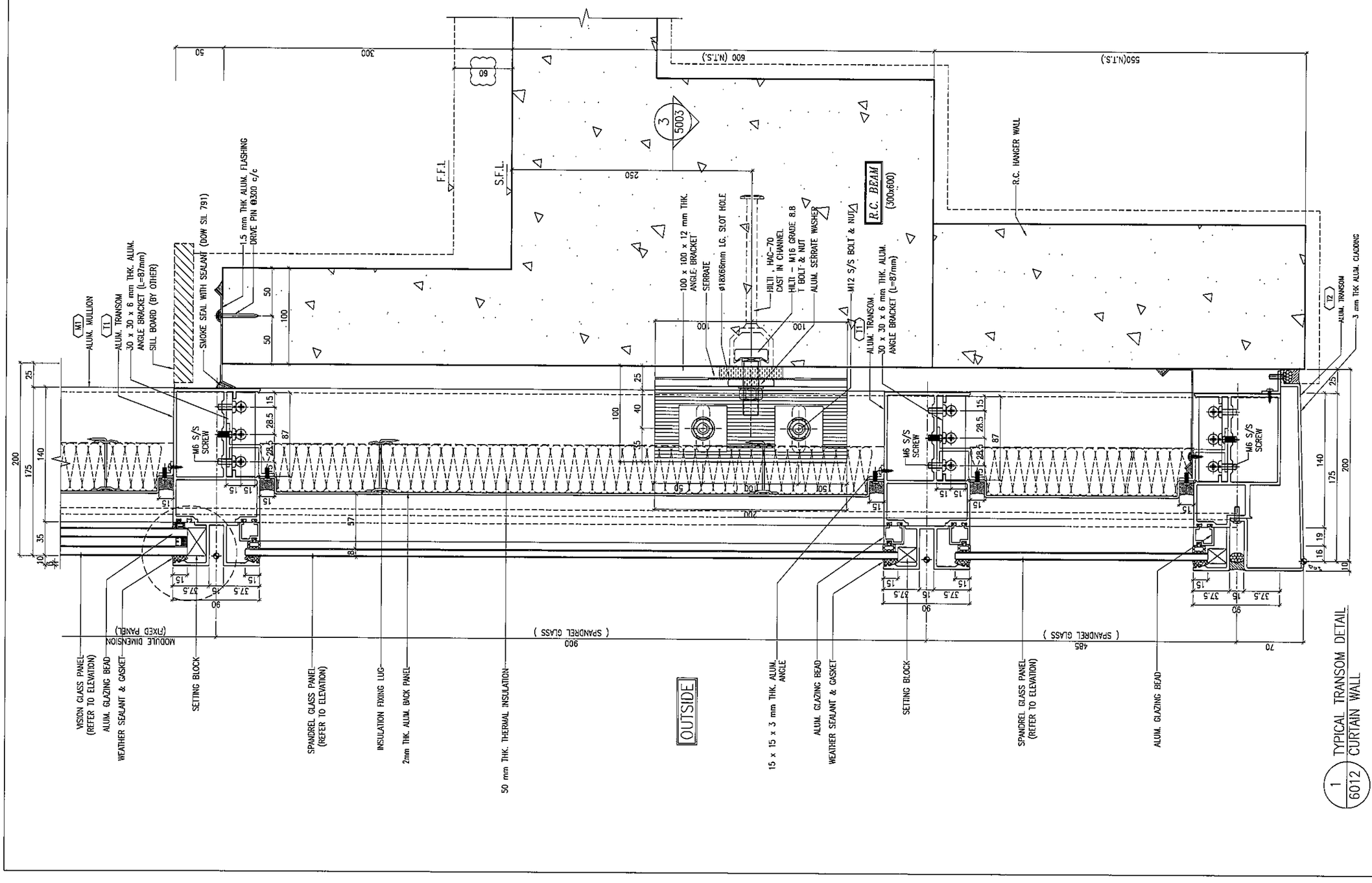

1 6012 TYPICAL TRANSOM DETAIL CURTAIN WALL

B.D. REF :

CLIENT :
信和置業有限公司
Sino Land Company Limited

ARCHITECT : WONG TUNG & PARTNERS LIMITED ARCHITECTS & PLANNERS

MAIN CONTRACTOR :
CR Construction Company Limited

STRUCTURAL ENGINEER :
AECOM

FACADE CONSULTANT:
AECOM

NOTE :
1. ALL DIMENSIONS ARE IN mm.
2. ALL ELEVATIONS ARE VIEWED FROM OUTSIDE.
3. ALL DIMENSIONS TO BE VERIFIED ON SITE BEFORE FABRICATION.

LEGEND :
X1 — DETAIL MARK NO.
X001 — REFER SHEET NO.

1. F.F.L. --FINISHED FLOOR LEVEL
2. S.F.L. --STRUCTURAL FLOOR LEVEL
3. (R) --REVERSED DETAIL

NO.	DATE	REVISED	BY
E	15/02/2019	GENERAL REVISED	
D	22/12/2018	GENERAL REVISED	
C	04/12/2018	GENERAL REVISED	
B	24/11/2018	GENERAL REVISED	
A	10/9/2018	GENERAL REVISED	

JOB NO. : J-837

PROJECT :
URA KWUN TONG TOWN CENTRE REDEVELOPMENT (AREA 2 & 3) AT NKIL 6514, KWUN TONG, KWLOON

TITLE :
TYPICAL TRANSOM DETAIL FOR CURTAIN WALL

DATE : 13-JUL-18 | SCALE : 1:2 (A1)

DRAWN BY : ASING | CHECKED BY : -

美特鋁質有限公司
MIDI ALUMINIUM FABRICATOR LTD.
Units 6-8, Sunray Industrial Centre, 1/F
610 Cha Kwo Ling Road, Kowloon
Tel:23489211-4 Fax:(852)27727666

DWG NO. : J837-CW-6012 | REV. : E

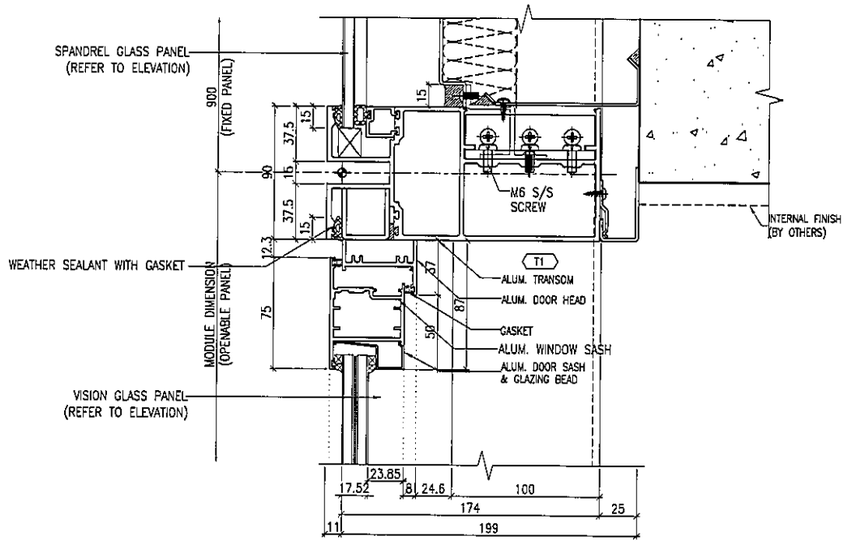

1 / 6013 TYPICAL TRANSOM DETAIL CURTAIN WALL

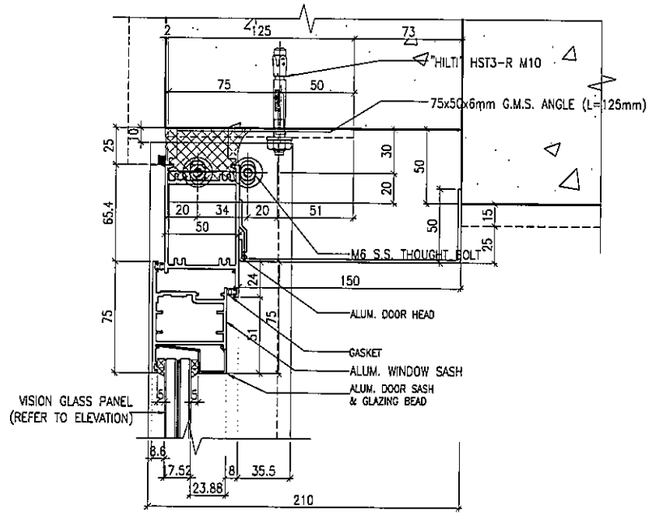

3 / 6013 TYPICAL TRANSOM DETAIL CURTAIN WALL

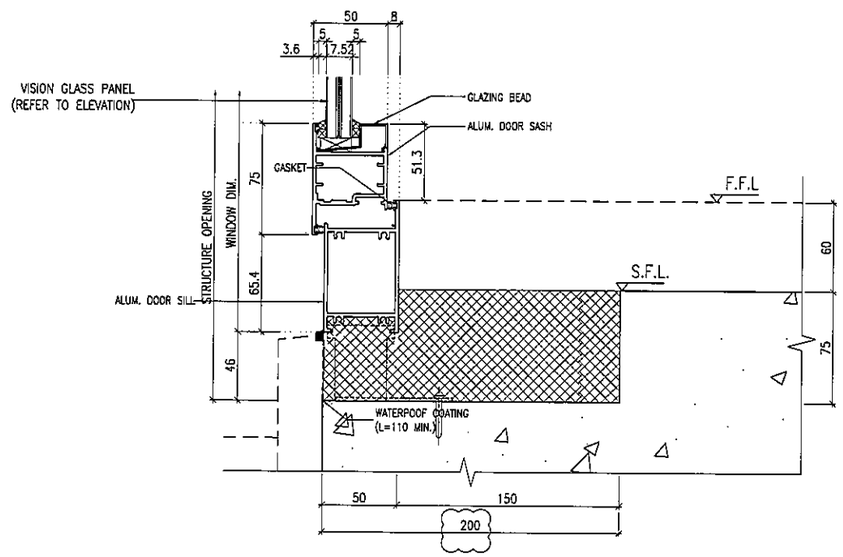

2 / 6013 TYPICAL TRANSOM DETAIL CURTAIN WALL

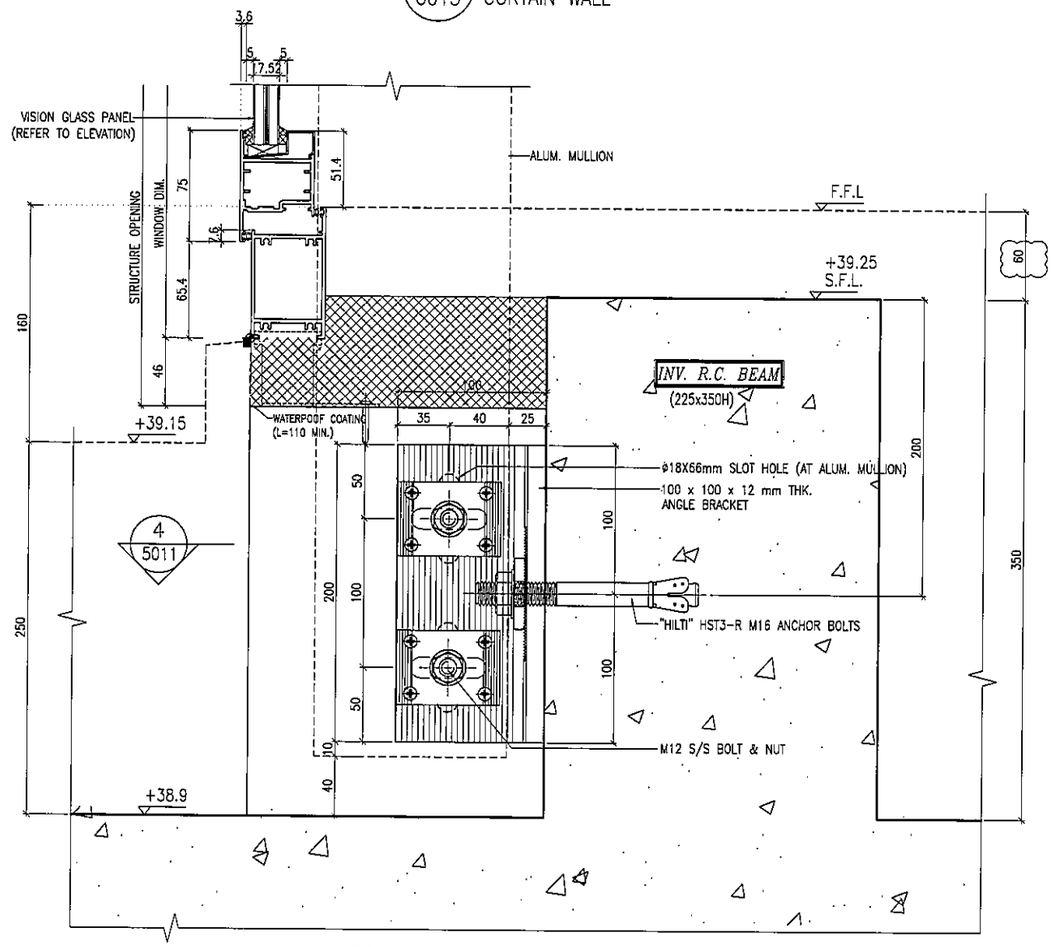

4 / 6013 TYPICAL TRANSOM DETAIL CURTAIN WALL

B.D. REF :

CLIENT :
信和置業有限公司
Sino Land Company Limited

ARCHITECT : WONG TUNG & PARTNERS LIMITED
ARCHITECTS & PLANNERS

MAIN CONTRACTOR :
CR Construction Company Limited

STRUCTURAL ENGINEER :
AECOM

FACADE CONSULTANT:
AECOM

NOTE :
1. ALL DIMENSIONS ARE IN mm.
2. ALL ELEVATIONS ARE VIEWED FROM OUTSIDE.
3. ALL DIMENSIONS TO BE VERIFIED ON SITE BEFORE FABRICATION.

LEGEND :
X1 / W001 — DETAIL MARK NO. / REFER SHEET NO.
1. F.F.L. --FINISHED FLOOR LEVEL
2. S.F.L. --STRUCTURAL FLOOR LEVEL
3. /R --REVERSED DETAIL

NO.	DATE	REVISED	BY
D	26/05/2019	GENERAL REVISED	
C	15/02/2019	GENERAL REVISED	
B	24/11/2018	GENERAL REVISED	
A	10/9/2018	GENERAL REVISED	

JOB NO. : J-837

PROJECT :
URA KWUN TONG TOWN CENTRE REDEVELOPMENT (AREA 2 & 3) AT NKIL 6514, KWUN TONG, KWLOON

TITLE :
TYPICAL TRANSOM DETAIL FOR CURTAIN WALL

DATE : 13-JUL-18 | SCALE : 1:2 (A1)

DRAWN BY : ASING | CHECKED BY : -

美特鋁質有限公司
MIDI ALUMINIUM FABRICATOR LTD.
Units 6-8, Sunray Industrial Centre, 1/F
610 Cha Kwo Ling Road, Kowloon
Tel:23489211-4 Fax:(852)27727666

DWG NO. : J837-CW-6013 | REV. : D

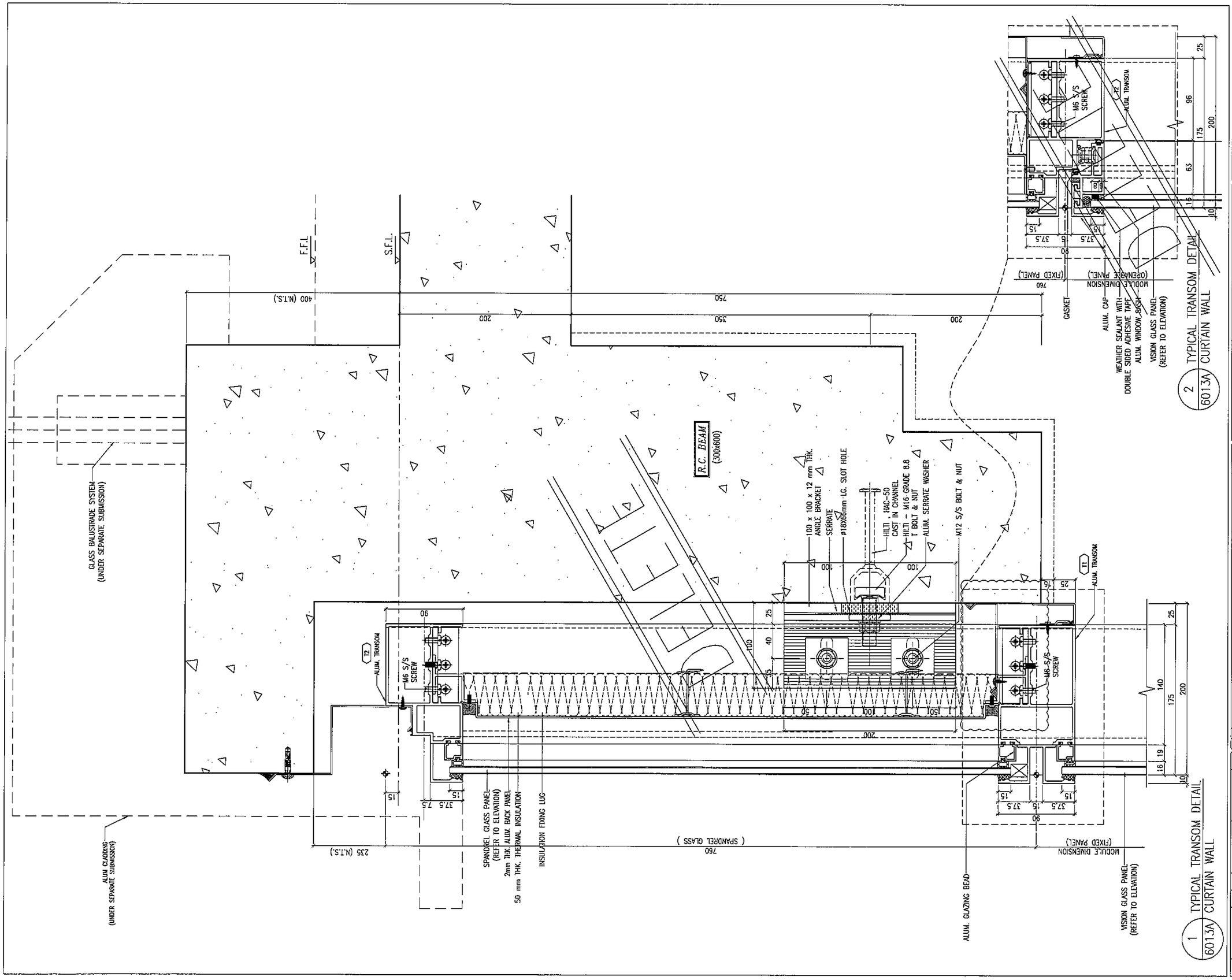

B.D. REF :

CLIENT :
信和置業有限公司
Sino Land Company Limited

ARCHITECT :
WONG TUNG & PARTNERS LIMITED
ARCHITECTS & PLANNERS

MAIN CONTRACTOR :
CR Construction Company Limited

STRUCTURAL ENGINEER :
AECOM

FACADE CONSULTANT:
AECOM

NOTE :
1. ALL DIMENSIONS ARE IN mm.
2. ALL ELEVATIONS ARE VIEWED FROM OUTSIDE.
3. ALL DIMENSIONS TO BE VERIFIED ON SITE BEFORE FABRICATION.

LEGEND :
- X1 / X001 — DETAIL MARK NO. / REFER SHEET NO.
1. F.F.L. --FINISHED FLOOR LEVEL
2. S.F.L. --STRUCTURAL FLOOR LEVEL
3. (/R) --REVERSED DETAIL

NO.	DATE	REVISED	BY
A	24/11/2018	GENERAL REVISED	

JOB NO. : J-837

PROJECT :
URA KWUN TONG TOWN CENTRE
REDEVELOPMENT (AREA 2 & 3) AT
NKIL 6514, KWUN TONG, KWLOON

TITLE :
TYPICAL TRANSOM DETAIL
FOR CURTAIN WALL

DATE : 13-JUL-18	SCALE : 1:2 (A1)
DRAWN BY : ASING	CHECKED BY : -

美特鋁質有限公司
MIDI ALUMINIUM FABRICATOR LTD.
Units 6-8, Sunray Industrial Centre, 1/F
610 Cha Kwo Ling Road, Kowloon
Tel:23489211-4 Fax:(852)27727666

DWG NO. : J837-CW-6013A | REV. : A

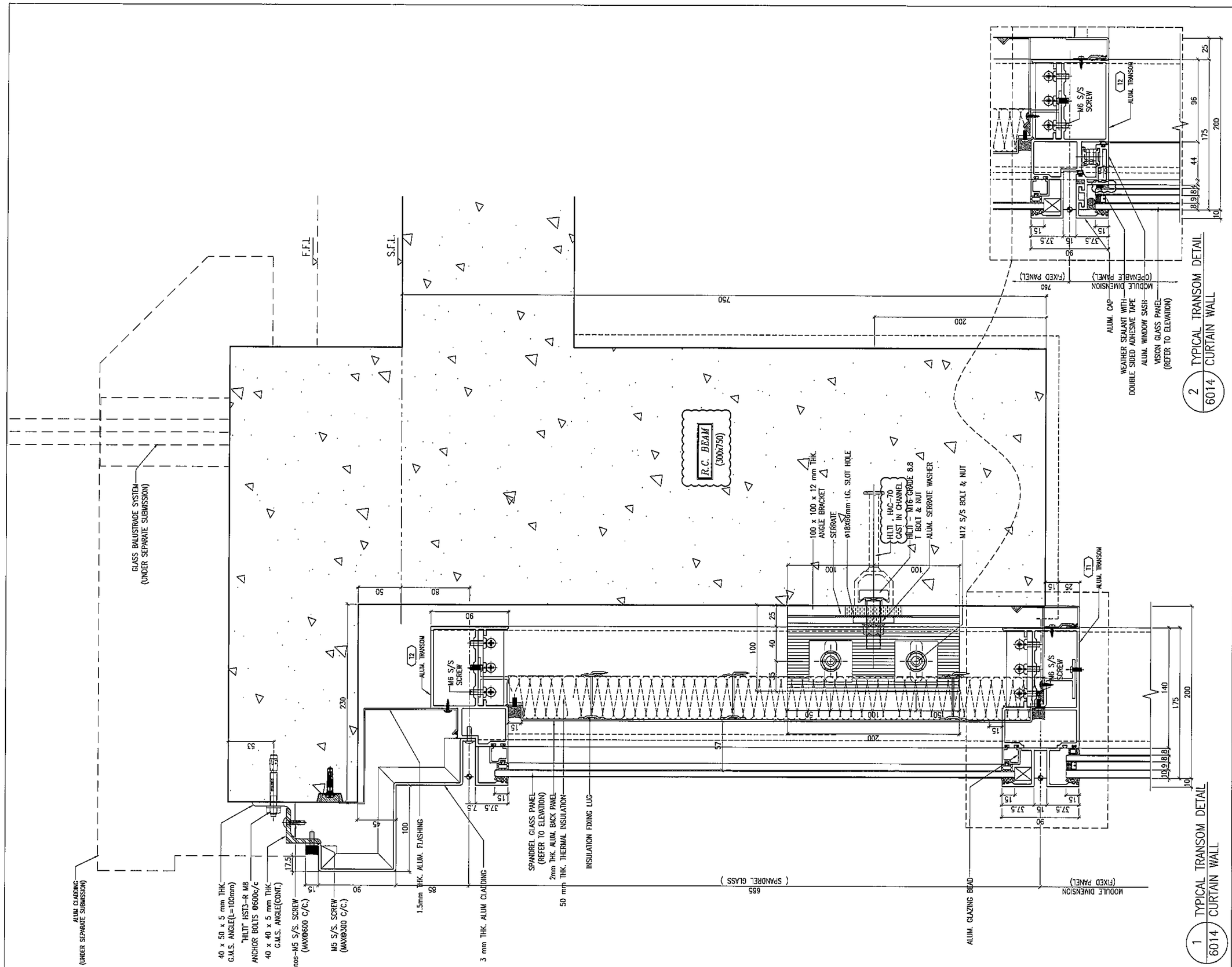

B.D. REF :

CLIENT :
信和置業有限公司
Sino Land Company Limited

ARCHITECT :
WONG TUNG & PARTNERS LIMITED
ARCHITECTS & PLANNERS

MAIN CONTRACTOR :
CR Construction Company Limited

STRUCTURAL ENGINEER :
AECOM

FACADE CONSULTANT:
AECOM

NOTE :
1. ALL DIMENSIONS ARE IN mm.
2. ALL ELEVATIONS ARE VIEWED FROM OUTSIDE.
3. ALL DIMENSIONS TO BE VERIFIED ON SITE BEFORE FABRICATION.

LEGEND :
- X1 / X001 — DETAIL MARK NO. / REFER SHEET NO.
1. F.F.L. --FINISHED FLOOR LEVEL
2. S.F.L. --STRUCTURAL FLOOR LEVEL
3. (R) --REVERSED DETAIL

NO.	DATE	REVISED	BY
B	22/12/2018	GENERAL REVISED	
A	24/11/2018	GENERAL REVISED	

JOB NO. : J-837

PROJECT :
URA KWUN TONG TOWN CENTRE REDEVELOPMENT (AREA 2 & 3) AT NKIL 6514, KWUN TONG, KWLOON

TITLE :
TYPICAL TRANSOM DETAIL FOR CURTAIN WALL

DATE : 13-JUL-18 | SCALE : 1:2 (A1)

DRAWN BY : ASING | CHECKED BY : -

美特鋁質有限公司
MIDI ALUMINIUM FABRICATOR LTD.
Units 6-8, Sunray Industrial Centre, 1/F
610 Cha Kwo Ling Road, Kowloon
Tel:23489211-4 Fax:(852)27727666

DWG NO. : J837-CW-6014 | REV. : B

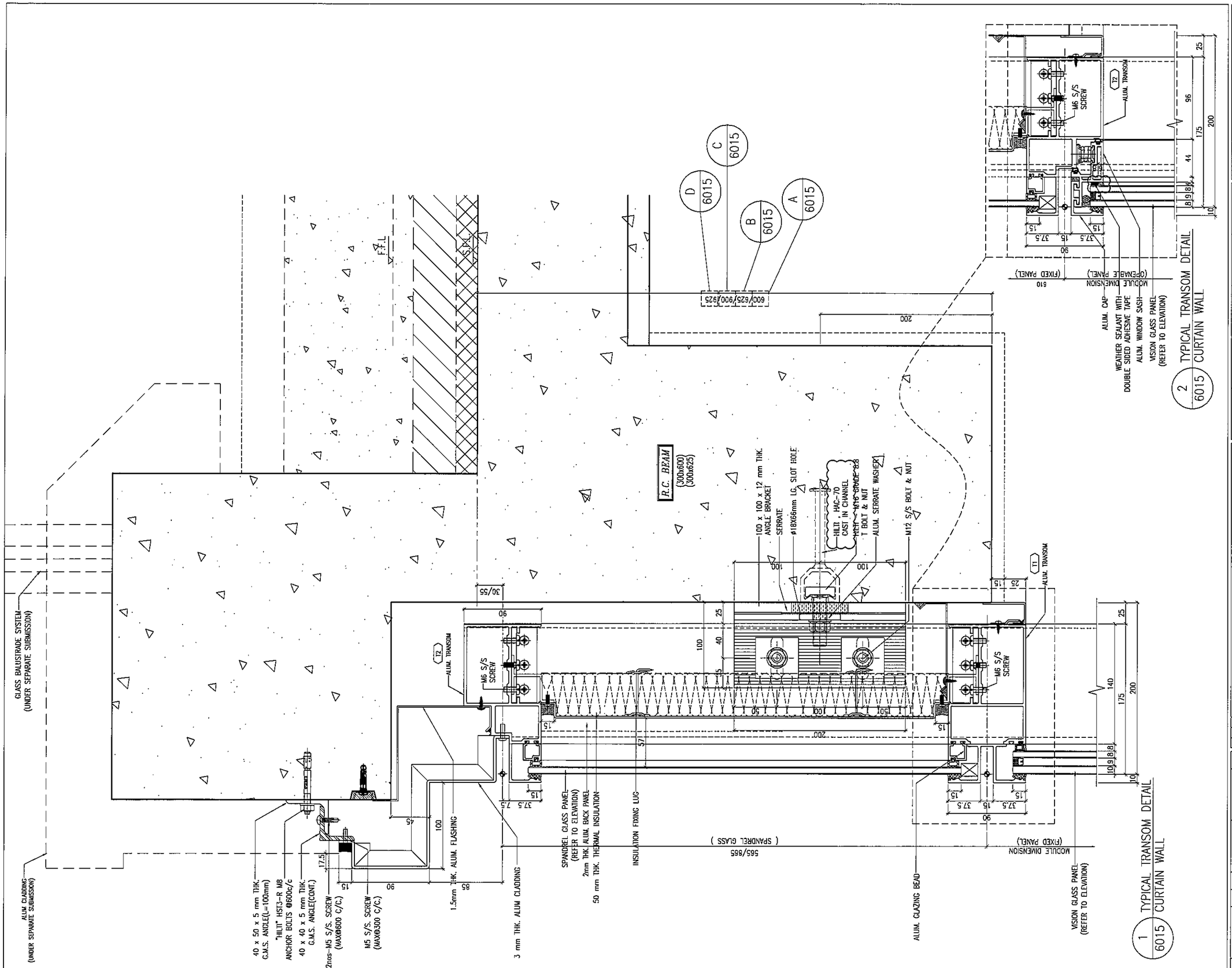

B.D. REF :

CLIENT :
信和置業有限公司
Sino Land Company Limited

ARCHITECT :
WONG TUNG & PARTNERS LIMITED
ARCHITECTS & PLANNERS

MAIN CONTRACTOR :
CR Construction Company Limited

STRUCTURAL ENGINEER :
AECOM

FACADE CONSULTANT:
AECOM

NOTE :
1. ALL DIMENSIONS ARE IN mm.
2. ALL ELEVATIONS ARE VIEWED FROM OUTSIDE.
3. ALL DIMENSIONS TO BE VERIFIED ON SITE BEFORE FABRICATION.

LEGEND :
X1 — DETAIL MARK NO.
X001 — REFER SHEET NO.

1. F.F.L. --FINISHED FLOOR LEVEL
2. S.F.L. --STRUCTURAL FLOOR LEVEL
3. /R --REVERSED DETAIL

NO.	DATE	REVISED	BY
B	22/12/2018	GENERAL REVISED	
A	24/11/2018	GENERAL REVISED	

JOB NO. : J-837

PROJECT :
URA KWUN TONG TOWN CENTRE REDEVELOPMENT (AREA 2 & 3) AT NKIL 6514, KWUN TONG, KWLOON

TITLE :
TYPICAL TRANSOM DETAIL FOR CURTAIN WALL

DATE : 13-JUL-18 | SCALE : 1:2 (A1)

DRAWN BY : ASING | CHECKED BY : -

美特鋁質有限公司
MIDI ALUMINIUM FABRICATOR LTD.
Units 6-8, Sunray Industrial Centre, 1/F
610 Cha Kwo Ling Road, Kowloon
Tel:23489211-4 Fax:(852)27727666

DWG NO. : J837-CW-6015 | REV. : B

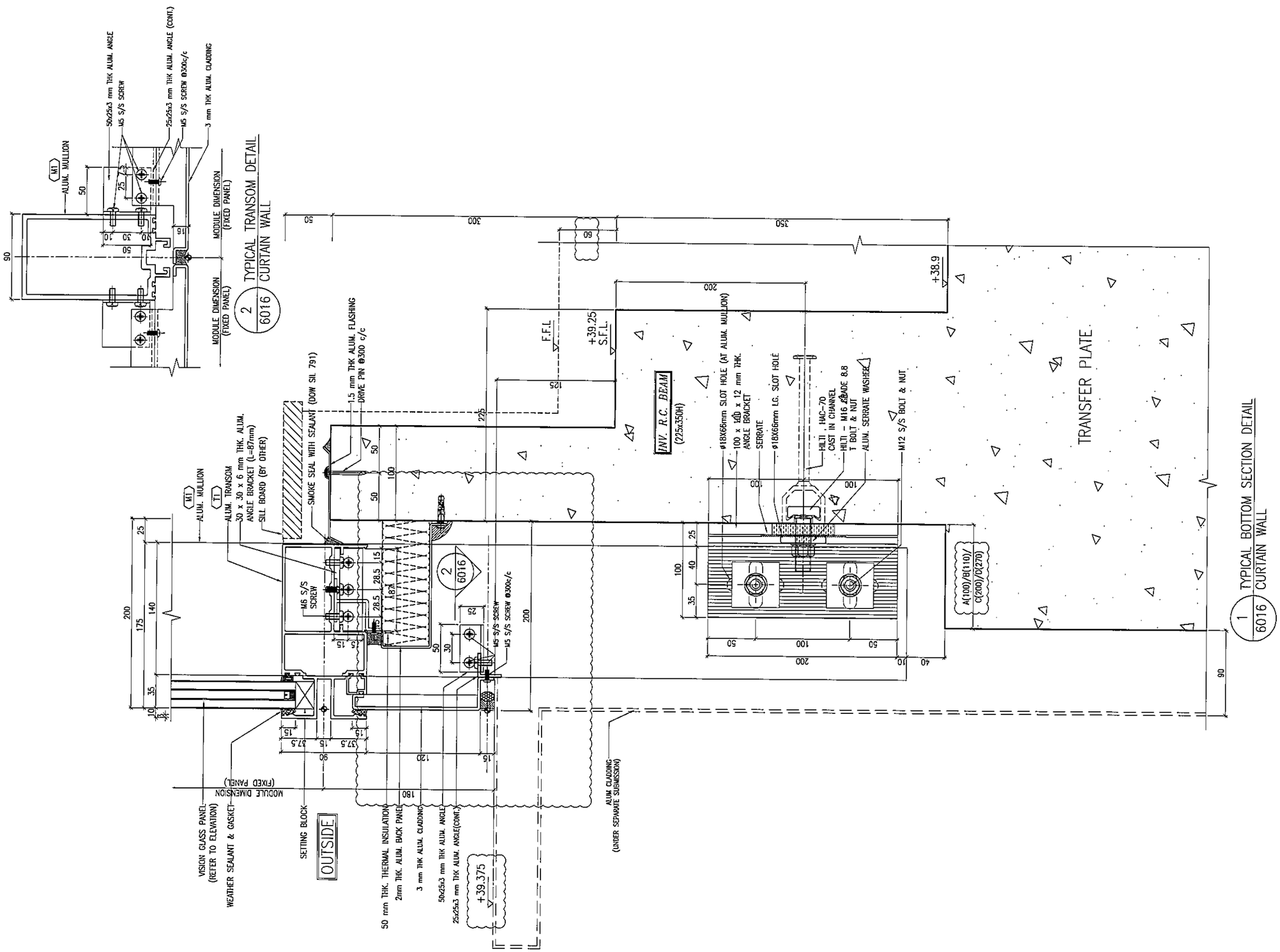

B.D. REF :

CLIENT :
信和置業有限公司
Sino Land Company Limited

ARCHITECT :
WONG TUNG & PARTNERS LIMITED
ARCHITECTS & PLANNERS

MAIN CONTRACTOR :
CR Construction Company Limited

STRUCTURAL ENGINEER :
AECOM

FACADE CONSULTANT:
AECOM

NOTE :
1. ALL DIMENSIONS ARE IN mm.
2. ALL ELEVATIONS ARE VIEWED FROM OUTSIDE.
3. ALL DIMENSIONS TO BE VERIFIED ON SITE BEFORE FABRICATION.

LEGEND :
X1 / X001 — DETAIL MARK NO. / REFER SHEET NO.
1. F.F.L. --FINISHED FLOOR LEVEL
2. S.F.L. --STRUCTURAL FLOOR LEVEL
3. /R --REVERSED DETAIL

NO.	DATE	REVISED	BY
B	15/02/2019	GENERAL REVISED	
A	24/11/2018	GENERAL REVISED	

JOB NO. : J-837

PROJECT :
URA KWUN TONG TOWN CENTRE REDEVELOPMENT (AREA 2 & 3) AT NKIL 6514, KWUN TONG, KWLOON

TITLE :
TYPICAL TRANSOM DETAIL FOR CURTAIN WALL

DATE : 13-JUL-18 | SCALE : 1:2 (A1)

DRAWN BY : Asing | CHECKED BY : -

美特鋁製有限公司
MIDI ALUMINIUM FABRICATOR LTD.
Units 6-8, Sunray Industrial Centre, 1/F
610 Cha Kwo Ling Road, Kowloon
Tel:23489211-4 Fax:(852)27727666

DWG NO. : J837-CW-6016 | REV. : B

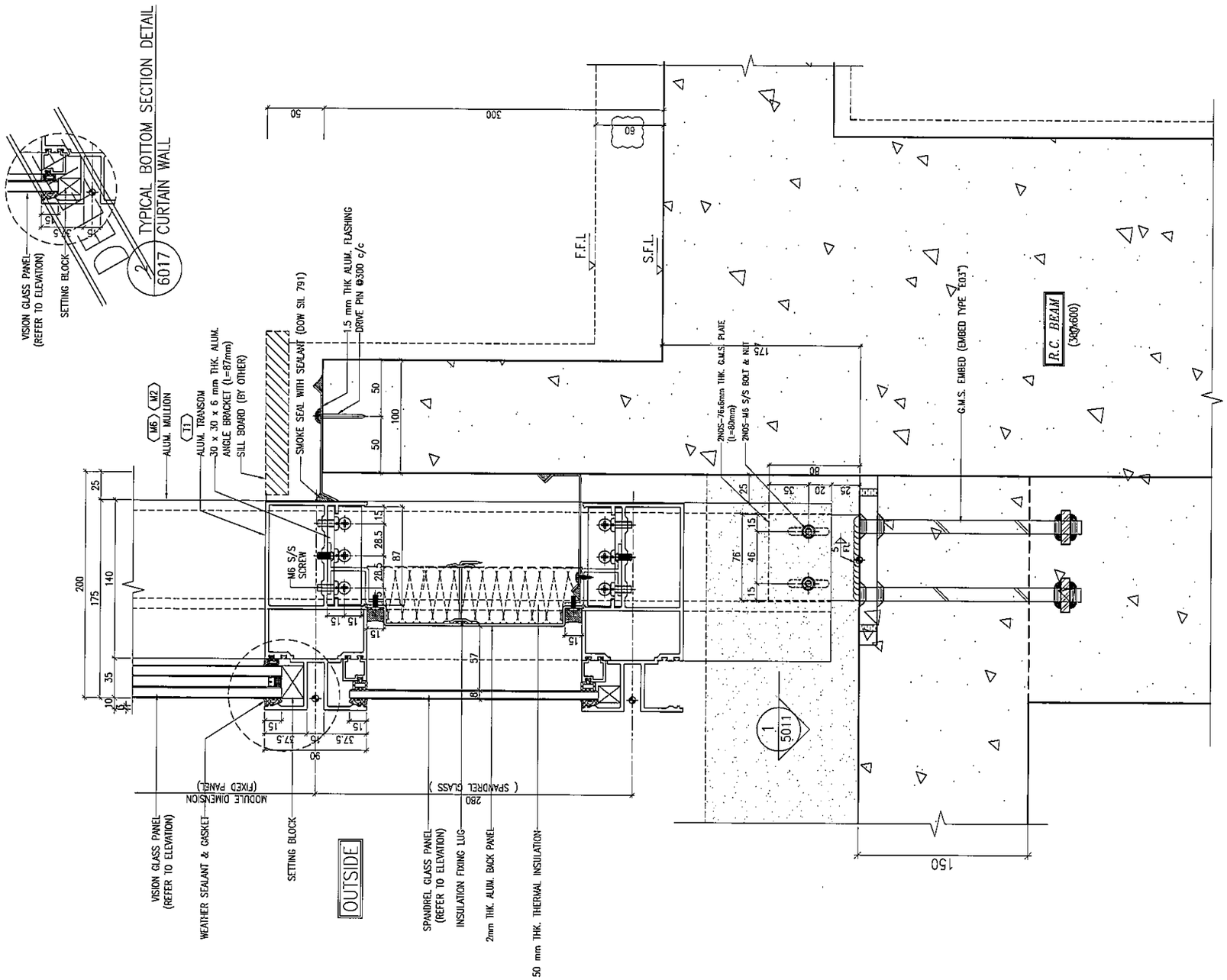

B.D. REF :

CLIENT :
信和置業有限公司
Sino Land Company Limited

ARCHITECT :
WONG TUNG & PARTNERS LIMITED
ARCHITECTS & PLANNERS

MAIN CONTRACTOR :
CR Construction Company Limited

STRUCTURAL ENGINEER :
AECOM

FACADE CONSULTANT:
AECOM

NOTE :
1. ALL DIMENSIONS ARE IN mm.
2. ALL ELEVATIONS ARE VIEWED FROM OUTSIDE.
3. ALL DIMENSIONS TO BE VERIFIED ON SITE BEFORE FABRICATION.

LEGEND :
- X1 / X001 — DETAIL MARK NO. / REFER SHEET NO.
1. F.F.L. --FINISHED FLOOR LEVEL
2. S.F.L. --STRUCTURAL FLOOR LEVEL
3. /R --REVERSED DETAIL

NO.	DATE	REVISED	BY
B	15/02/2019	GENERAL REVISED	
A	24/11/2018	GENERAL REVISED	

JOB NO. : J-837

PROJECT :
URA KWUN TONG TOWN CENTRE REDEVELOPMENT (AREA 2 & 3) AT NKIL 6514, KWUN TONG, KWLOON

TITLE :
TYPICAL TRANSOM DETAIL FOR CURTAIN WALL

DATE : 13-JUL-18 | SCALE : 1:2 (A1)

DRAWN BY : Asing | CHECKED BY : -

美特鋁質有限公司
MIDI ALUMINIUM FABRICATOR LTD.
Units 6-8, Sunray Industrial Centre, 1/F
610 Cha Kwo Ling Road, Kowloon
Tel:23489211-4 Fax:(852)27727666

DWG NO. : J837-CW-6017 | REV. : B

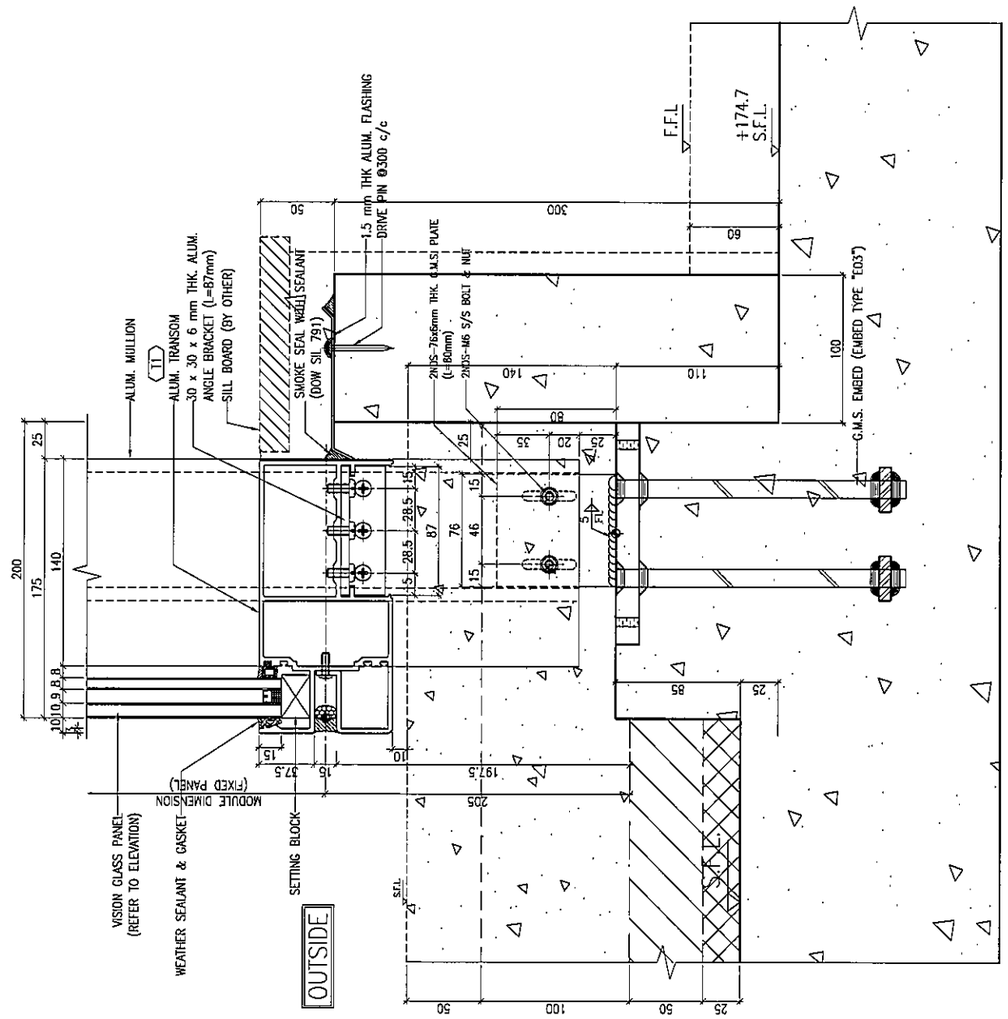

1 / 6018 TYPICAL TRANSOM DETAIL CURTAIN WALL

REFER TO J837-CW-2513

B.D. REF :

CLIENT :
信和置業有限公司
Sino Land Company Limited

ARCHITECT :
WONG TUNG & PARTNERS LIMITED
ARCHITECTS & PLANNERS

MAIN CONTRACTOR :
CR Construction Company Limited

STRUCTURAL ENGINEER :
AECOM

FACADE CONSULTANT:
AECOM

NOTE :
1. ALL DIMENSIONS ARE IN mm.
2. ALL ELEVATIONS ARE VIEWED FROM OUTSIDE.
3. ALL DIMENSIONS TO BE VERIFIED ON SITE BEFORE FABRICATION.

LEGEND :
- X1 / X001 — DETAIL MARK NO. / REFER SHEET NO.
1. F.F.L. --FINISHED FLOOR LEVEL
2. S.F.L. --STRUCTURAL FLOOR LEVEL
3. /R --REVERSED DETAIL

NO.	DATE	REVISED	BY
B	15/02/2019	GENERAL REVISED	
A	24/11/2018	GENERAL REVISED	

JOB NO. : J-837

PROJECT :
URA KWUN TONG TOWN CENTRE REDEVELOPMENT (AREA 2 & 3) AT NKIL 6514, KWUN TONG, KWLOON

TITLE :
TYPICAL TRANSOM DETAIL FOR CURTAIN WALL

DATE : 13-JUL-18 | SCALE : 1:2 (A1)

DRAWN BY : Asing | CHECKED BY : -

美特鋁質有限公司
MIDI ALUMINIUM FABRICATOR LTD.
Units 6-8, Sunray Industrial Centre, 1/F
610 Cha Kwo Ling Road, Kowloon
Tel:23489211-4 Fax:(852)27727666

DWG NO. : J837-CW-6018 | REV. : B

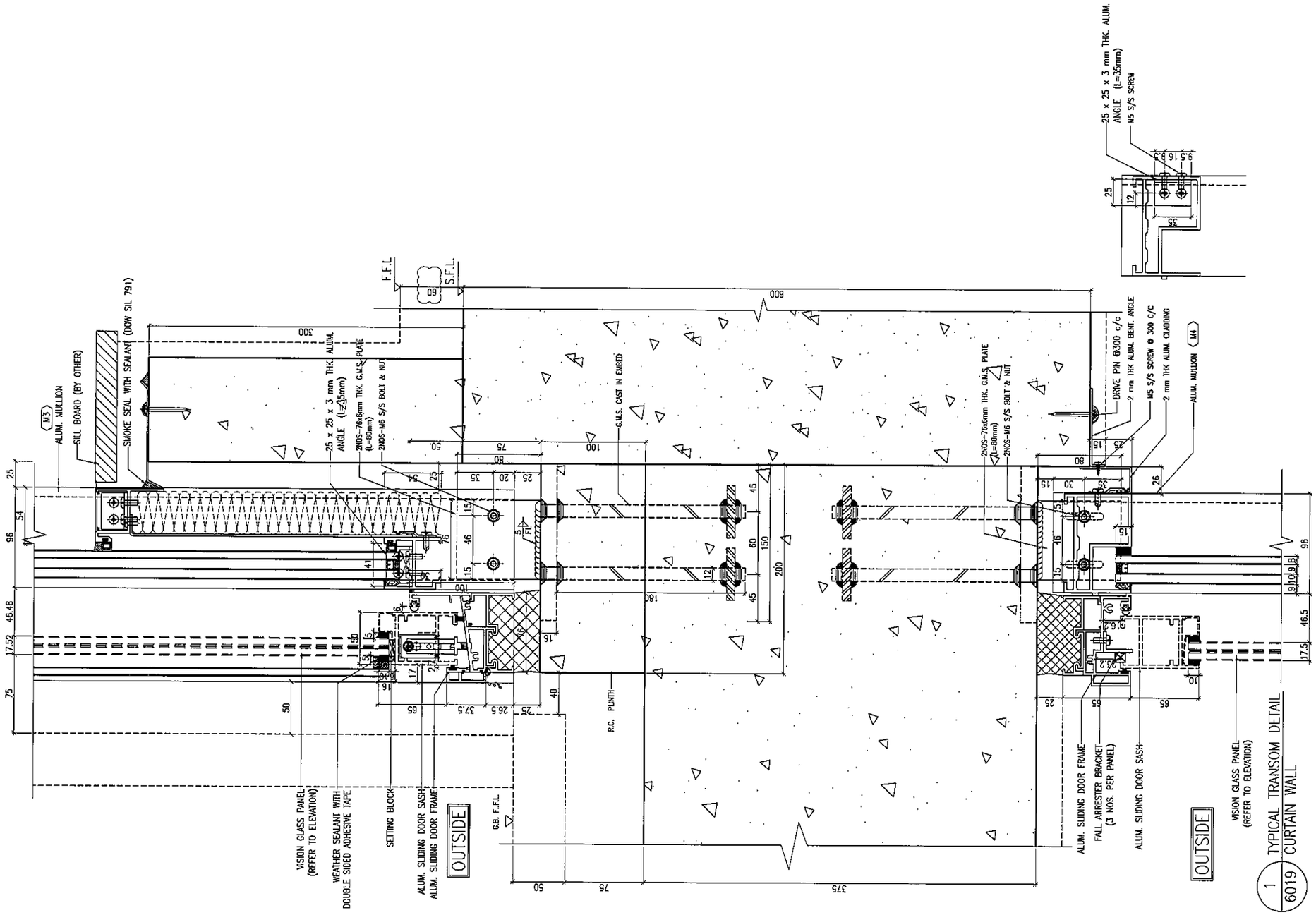

1 / 6019 TYPICAL TRANSOM DETAIL CURTAIN WALL

B.D. REF :

CLIENT :
信和置業有限公司
Sino Land Company Limited

ARCHITECT :
WONG TUNG & PARTNERS LIMITED
ARCHITECTS & PLANNERS

MAIN CONTRACTOR :
CR Construction Company Limited

STRUCTURAL ENGINEER :
AECOM

FACADE CONSULTANT:
AECOM

NOTE :
1. ALL DIMENSIONS ARE IN mm.
2. ALL ELEVATIONS ARE VIEWED FROM OUTSIDE.
3. ALL DIMENSIONS TO BE VERIFIED ON SITE BEFORE FABRICATION.

LEGEND :
X1 — DETAIL MARK NO.
X001 — REFER SHEET NO.

1. F.F.L. --FINISHED FLOOR LEVEL
2. S.F.L. --STRUCTURAL FLOOR LEVEL
3. /R --REVERSED DETAIL

NO.	DATE	REVISED	BY
B	15/02/2019	GENERAL REVISED	
A	04/12/2018	GENERAL REVISED	

JOB NO. : J-837

PROJECT :
URA KWUN TONG TOWN CENTRE REDEVELOPMENT (AREA 2 & 3) AT NKIL 6514, KWUN TONG, KWLOON

TITLE :
TYPICAL TRANSOM DETAIL FOR CURTAIN WALL

DATE : 24-NOV-18 | SCALE : 1:2 (A1)

DRAWN BY : Asing | CHECKED BY : -

美特鋁質有限公司
MIDI ALUMINIUM FABRICATOR LTD.
Units 6-8, Sunray Industrial Centre, 1/F
610 Cha Kwo Ling Road, Kowloon
Tel:23489211-4 Fax:(852)27727666

DWG NO. : J837-CW-6019 | REV. : B

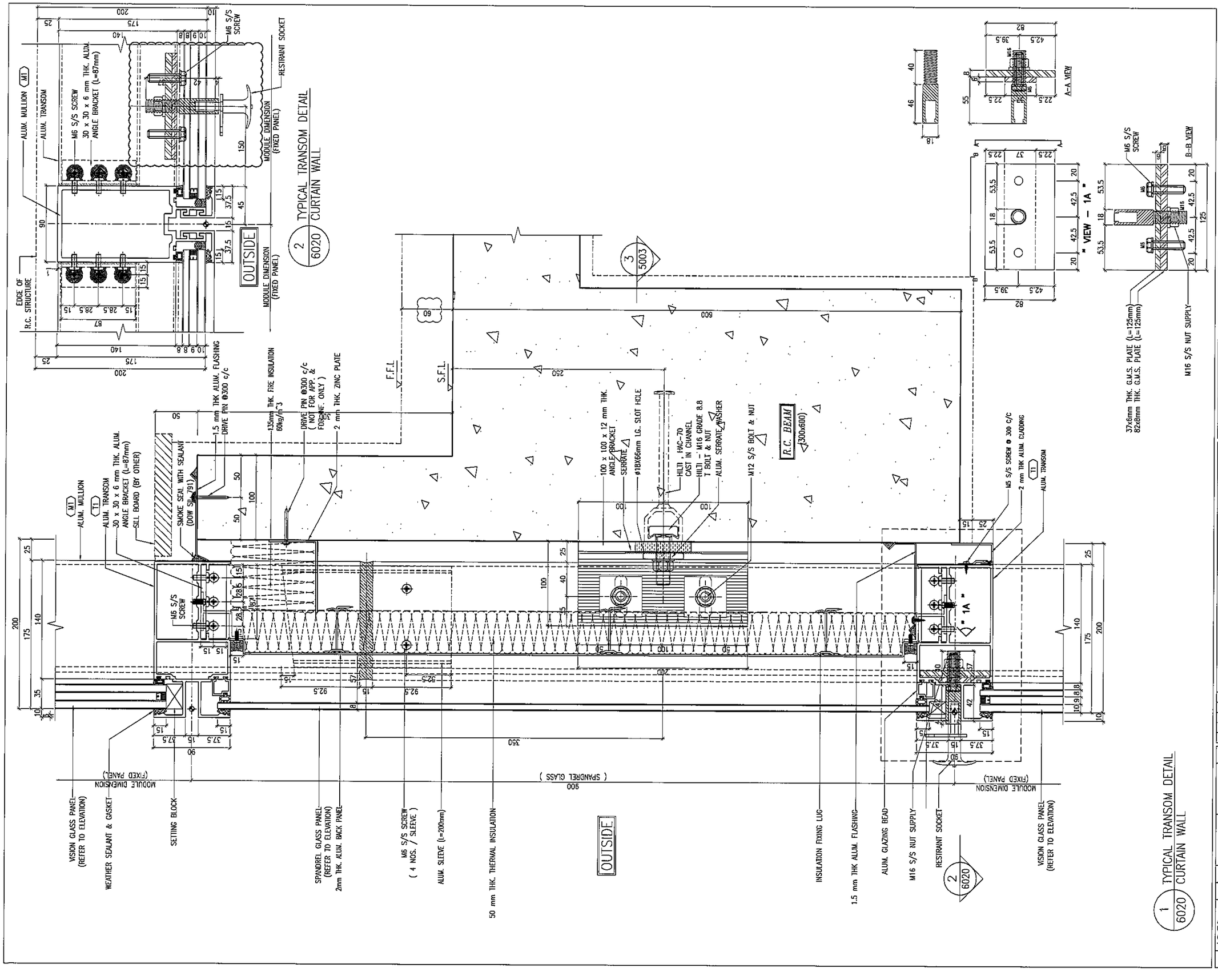

B.D. REF :

CLIENT :
信和置業有限公司
Sino Land Company Limited

ARCHITECT :
WONG TUNG & PARTNERS LIMITED
ARCHITECTS & PLANNERS

MAIN CONTRACTOR :
CR Construction Company Limited

STRUCTURAL ENGINEER :
AECOM

FACADE CONSULTANT:
AECOM

NOTE :
1. ALL DIMENSIONS ARE IN mm.
2. ALL ELEVATIONS ARE VIEWED FROM OUTSIDE.
3. ALL DIMENSIONS TO BE VERIFIED ON SITE BEFORE FABRICATION.

LEGEND :
X1 / X001 — DETAIL MARK NO. / REFER SHEET NO.
1. F.F.L. --FINISHED FLOOR LEVEL
2. S.F.L. --STRUCTURAL FLOOR LEVEL
3. /R --REVERSED DETAIL

NO.	DATE	REVISED	BY
D	15/02/2019	GENERAL REVISED	
C	04/01/2019	GENERAL REVISED	
B	22/12/2018	GENERAL REVISED	
A	04/12/2018	GENERAL REVISED	

JOB NO. : J-837

PROJECT :
URA KWUN TONG TOWN CENTRE REDEVELOPMENT (AREA 2 & 3) AT NKIL 6514, KWUN TONG, KWLOON

TITLE :
TYPICAL TRANSOM DETAIL FOR CURTAIN WALL

DATE : 24-NOV-18 | SCALE : 1:2 (A1)

DRAWN BY : ASING | CHECKED BY : -

美特鋁質有限公司
MIDI ALUMINIUM FABRICATOR LTD.
Units 6-8, Sunray Industrial Centre, 1/F
610 Cha Kwo Ling Road, Kowloon
Tel:23489211-4 Fax:(852)27727866

DWG NO. : J837-CW-6020 | REV. : D

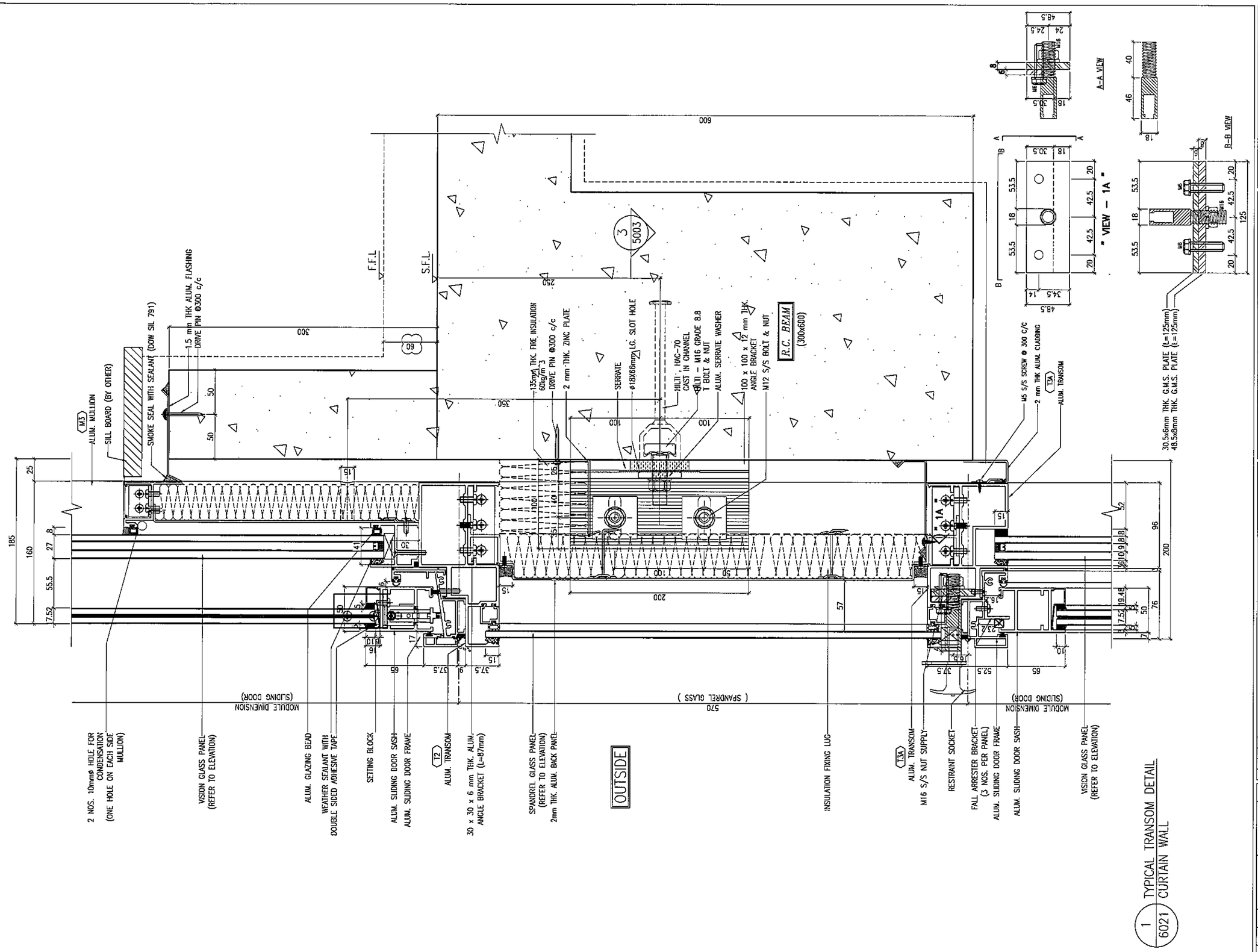

1 / 6021 TYPICAL TRANSOM DETAIL CURTAIN WALL

B.D. REF :

CLIENT :
信和置業有限公司
Sino Land Company Limited

ARCHITECT :
WONG TUNG & PARTNERS LIMITED
ARCHITECTS & PLANNERS

MAIN CONTRACTOR :
CR Construction Company Limited

STRUCTURAL ENGINEER :
AECOM

FACADE CONSULTANT:
AECOM

NOTE :
1. ALL DIMENSIONS ARE IN mm.
2. ALL ELEVATIONS ARE VIEWED FROM OUTSIDE.
3. ALL DIMENSIONS TO BE VERIFIED ON SITE BEFORE FABRICATION.

LEGEND :
X1 — DETAIL MARK NO.
X001 — REFER SHEET NO.

1. F.F.L. --FINISHED FLOOR LEVEL
2. S.F.L. --STRUCTURAL FLOOR LEVEL
3. /R --REVERSED DETAIL

NO.	DATE	REVISED	BY
C	15/02/2019	GENERAL REVISED	
B	04/01/2019	GENERAL REVISED	
A	22/12/2018	GENERAL REVISED	

JOB NO. : J-837

PROJECT :
URA KWUN TONG TOWN CENTRE REDEVELOPMENT (AREA 2 & 3) AT NKIL 6514, KWUN TONG, KWLOON

TITLE :
TYPICAL TRANSOM DETAIL FOR CURTAIN WALL

DATE : 22-DEC-18 | SCALE : 1:2 (A1)

DRAWN BY : ASING | CHECKED BY : -

美特鋁質有限公司
MIDI ALUMINIUM FABRICATOR LTD.
Units 6-8, Sunray Industrial Centre, 1/F
610 Cha Kwo Ling Road, Kowloon
Tel:23489211-4 Fax:(852)27727656

DWG NO. : J837-CW-6021 | REV. : C

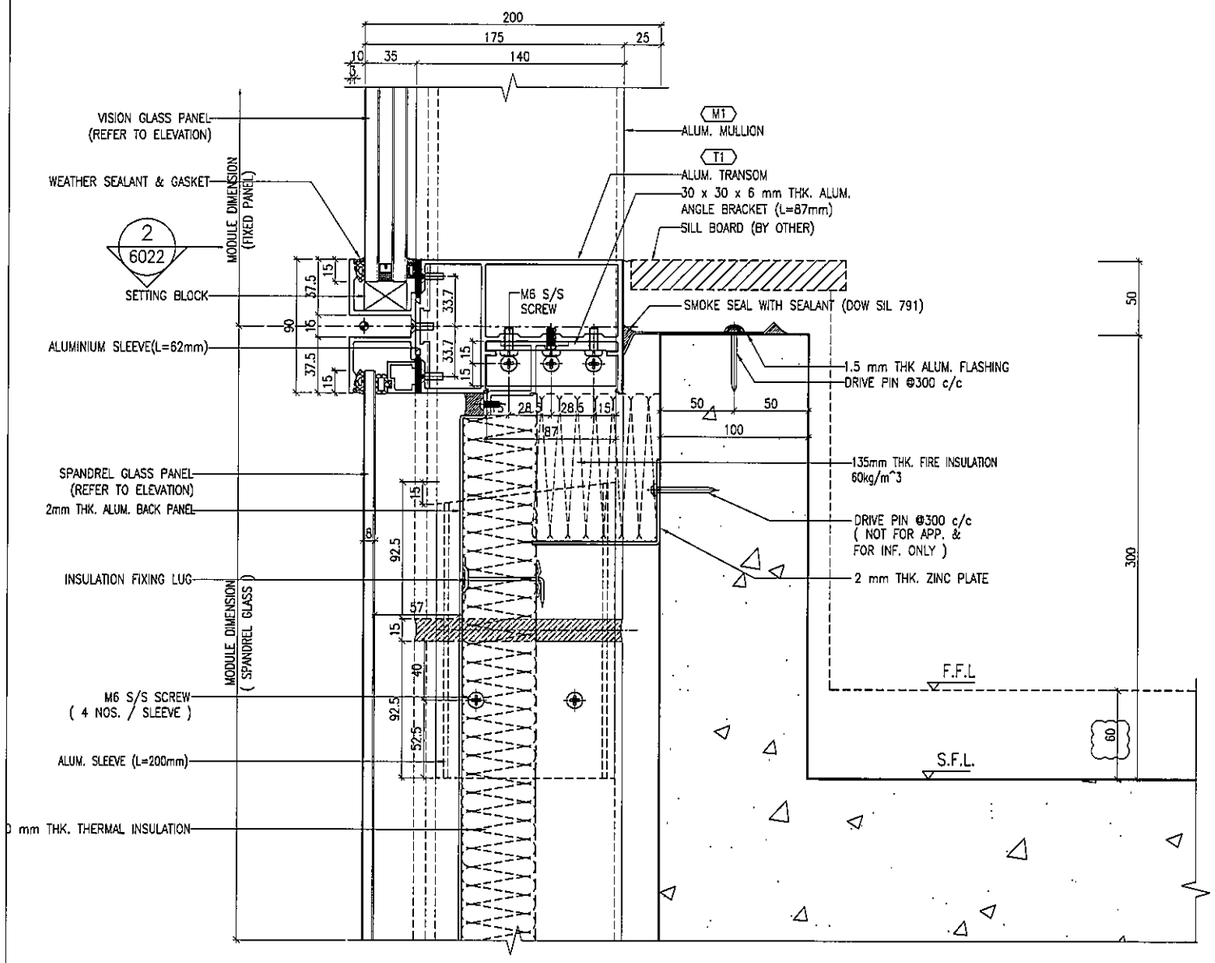

1 / 6022 TYPICAL TRANSOM DETAIL
CURTAIN WALL

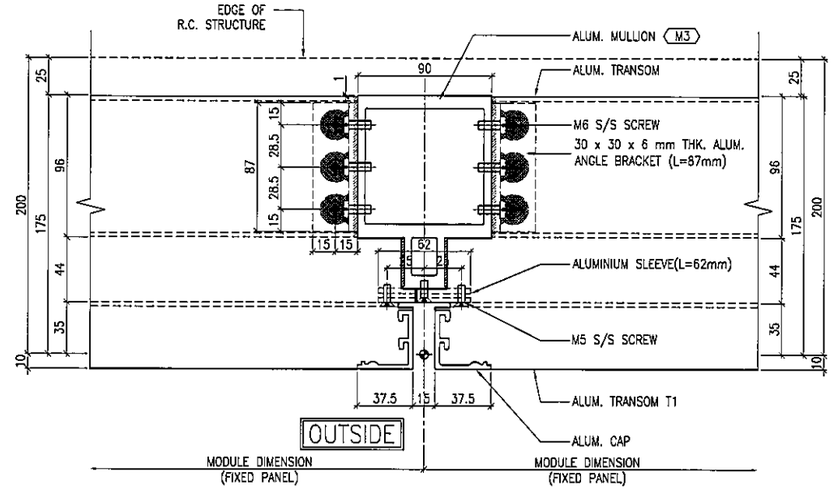

2 / 6022 TYPICAL MULLION DETAIL
CURTAIN WALL

B.D. REF :

CLIENT :
信和置業有限公司
Sino Land Company Limited

ARCHITECT :
WONG TUNG & PARTNERS LIMITED
ARCHITECTS & PLANNERS

MAIN CONTRACTOR :
CR Construction Company Limited

STRUCTURAL ENGINEER :
AECOM

FACADE CONSULTANT:
AECOM

NOTE :
1. ALL DIMENSIONS ARE IN mm.
2. ALL ELEVATIONS ARE VIEWED FROM OUTSIDE.
3. ALL DIMENSIONS TO BE VERIFIED ON SITE BEFORE FABRICATION.

LEGEND :
X1 / X001 — DETAIL MARK NO. / REFER SHEET NO.
1. F.F.L. --FINISHED FLOOR LEVEL
2. S.F.L. --STRUCTURAL FLOOR LEVEL
3. (R) --REVERSED DETAIL

NO.	DATE	REVISED	BY
A	15/02/2019	GENERAL REVISED	

JOB NO. : J-837

PROJECT :
URA KWUN TONG TOWN CENTRE
REDEVELOPMENT (AREA 2 & 3) AT
NKIL 6514, KWUN TONG, KWLOON

TITLE :
TYPICAL TRANSOM DETAIL
FOR CURTAIN WALL

DATE : 22-DEC-18 | SCALE : 1:2 (A1)

DRAWN BY : ASING | CHECKED BY : -

美特鋁質有限公司
MIDI ALUMINIUM FABRICATOR LTD.
Units 6-8, Sunray Industrial Centre, 1/F
610 Cha Kwo Ling Road, Kowloon
Tel:23489211-4 Fax:(852)27727666

DWG NO. : J837-CW-6022 | REV. : A

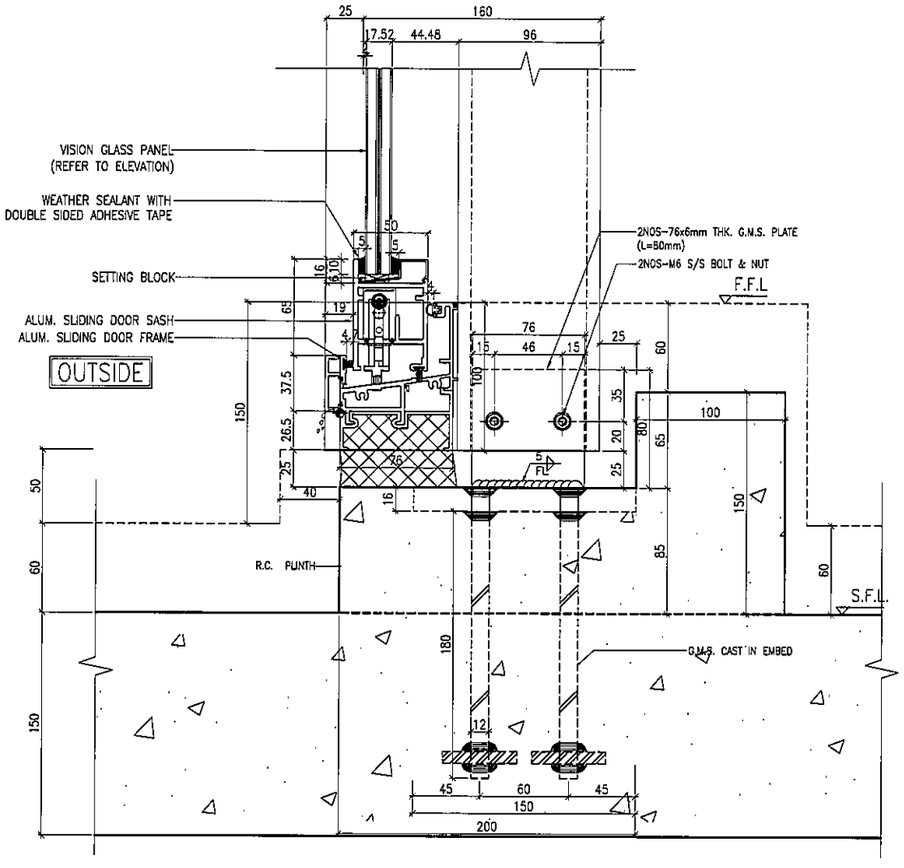

1 / 6023 TYPICAL TRANSOM DETAIL CURTAIN WALL

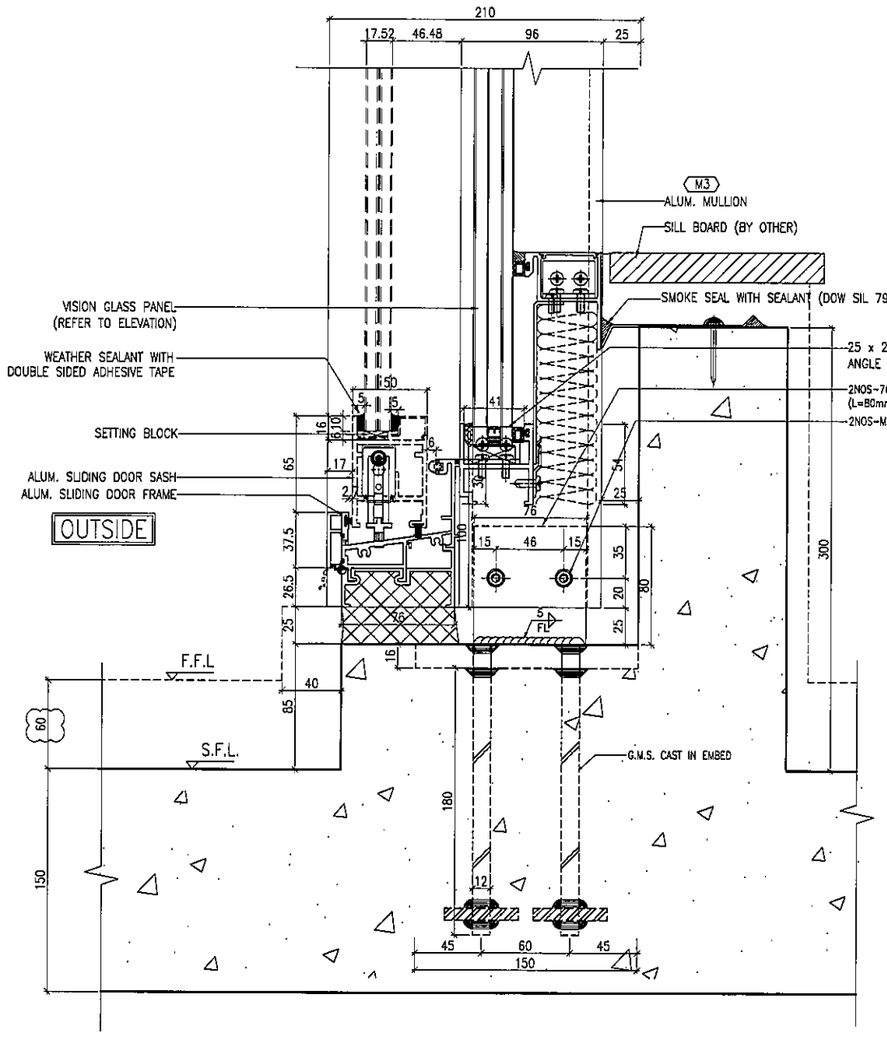

2 / 6023 TYPICAL TRANSOM DETAIL CURTAIN WALL

B.D. REF :

CLIENT :
信和置業有限公司
Sino Land Company Limited

ARCHITECT :
WONG TUNG & PARTNERS LIMITED
ARCHITECTS & PLANNERS

MAIN CONTRACTOR :
CR Construction Company Limited

STRUCTURAL ENGINEER :
AECOM

FACADE CONSULTANT:
AECOM

NOTE :
1. ALL DIMENSIONS ARE IN mm.
2. ALL ELEVATIONS ARE VIEWED FROM OUTSIDE.
3. ALL DIMENSIONS TO BE VERIFIED ON SITE BEFORE FABRICATION.

LEGEND :
X1 / X001 — DETAIL MARK NO. / REFER SHEET NO.
1. F.F.L. --FINISHED FLOOR LEVEL
2. S.F.L. --STRUCTURAL FLOOR LEVEL
3. /R --REVERSED DETAIL

NO.	DATE	REVISED	BY
A	15/02/2019	GENERAL REVISED	

JOB NO. : J-837

PROJECT :
URA KWUN TONG TOWN CENTRE
REDEVELOPMENT (AREA 2 & 3) AT
NKIL 6514, KWUN TONG, KWLOON

TITLE :
TYPICAL TRANSOM DETAIL
FOR CURTAIN WALL

DATE : 22-DEC-18 | SCALE : 1:2 (A1)

DRAWN BY : ASING | CHECKED BY : -

美特鋁質有限公司
MIDI ALUMINIUM FABRICATOR LTD.
Units 6-8, Sunray Industrial Centre, 1/F
610 Cha Kwo Ling Road, Kowloon
Tel:23489211-4 Fax:(852)27727666

DWG NO. : J837-CW-6023 | REV. : A

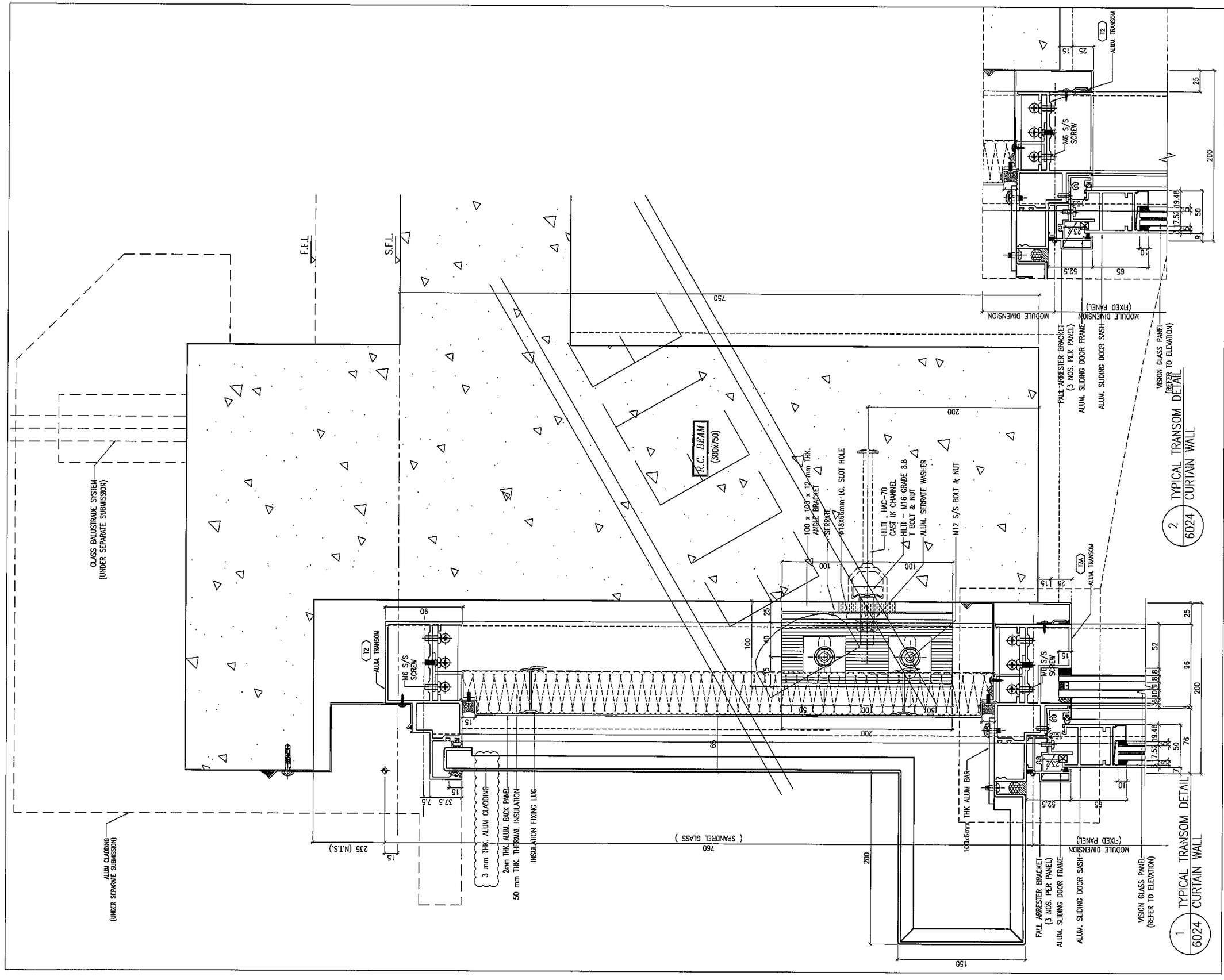

B.D. REF :

CLIENT :
信和置業有限公司
Sino Land Company Limited

ARCHITECT :
WONG TUNG & PARTNERS LIMITED
ARCHITECTS & PLANNERS

MAIN CONTRACTOR :
CR Construction Company Limited

STRUCTURAL ENGINEER :
AECOM

FACADE CONSULTANT:
AECOM

NOTE :
1. ALL DIMENSIONS ARE IN mm.
2. ALL ELEVATIONS ARE VIEWED FROM OUTSIDE.
3. ALL DIMENSIONS TO BE VERIFIED ON SITE BEFORE FABRICATION.

LEGEND :
X1 — DETAIL MARK NO.
X001 — REFER SHEET NO.

1. F.F.L. --FINISHED FLOOR LEVEL
2. S.F.L. --STRUCTURAL FLOOR LEVEL
3. /R --REVERSED DETAIL

NO.	DATE	REVISED	BY
A	16/06/2019	GENERAL REVISED	

JOB NO. : J-837

PROJECT :
URA KWUN TONG TOWN CENTRE REDEVELOPMENT (AREA 2 & 3) AT NKIL 6514, KWUN TONG, KWLOON

TITLE :
TYPICAL TRANSOM DETAIL FOR CURTAIN WALL

DATE : 22-DEC-18 | SCALE : 1:2 (A1)

DRAWN BY : ASING | CHECKED BY : -

美特鋁質有限公司
MIDI ALUMINIUM FABRICATOR LTD.
Units 6-8, Sunray Industrial Centre, 1/F
610 Cha Kwo Ling Road, Kowloon
Tel:23489211-4 Fax:(852)27727666

DWG NO. : J837-CW-6024 | REV. : A

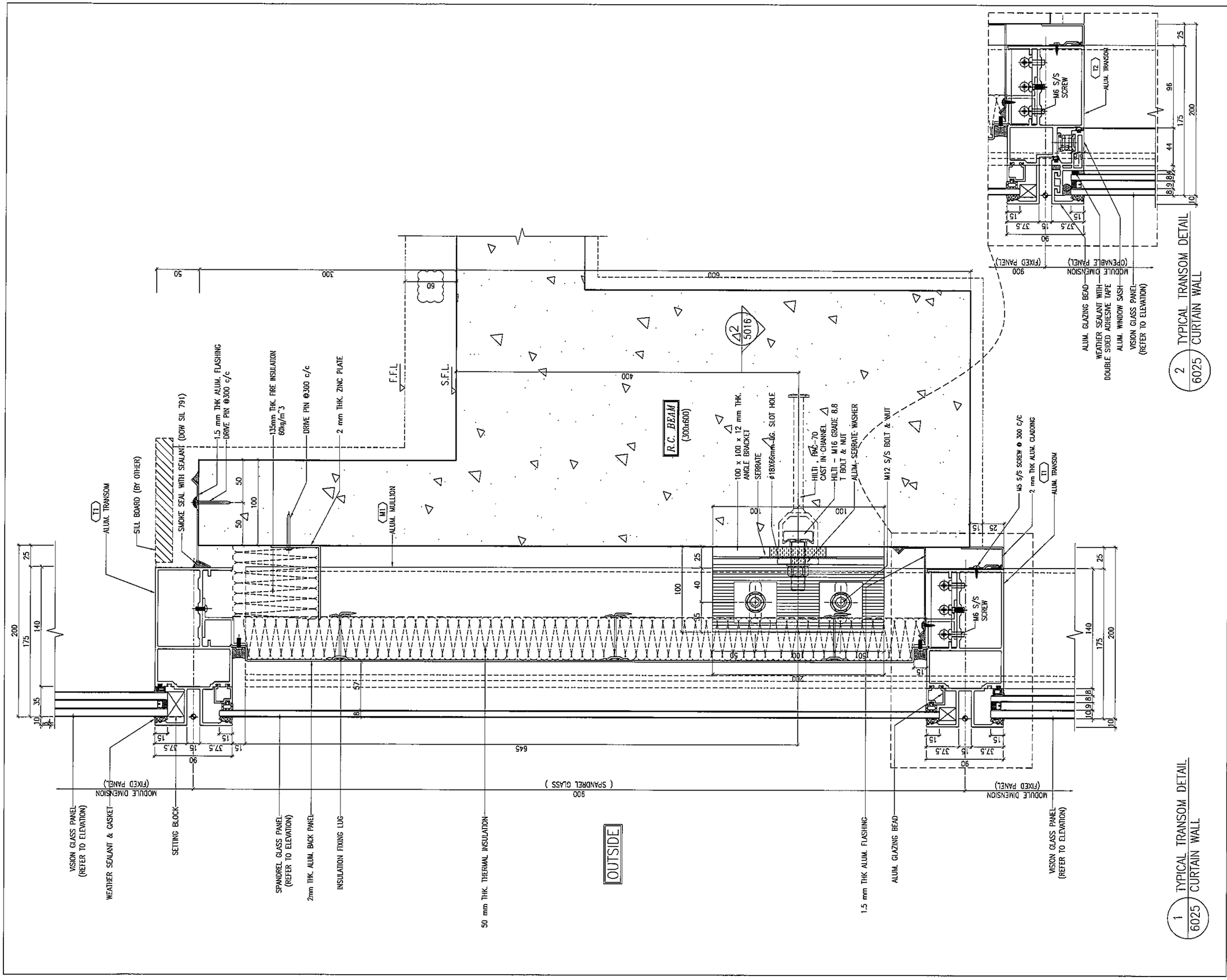

B.D. REF :

CLIENT :
信和置業有限公司
Sino Land Company Limited

ARCHITECT :
WONG TUNG & PARTNERS LIMITED
ARCHITECTS & PLANNERS

MAIN CONTRACTOR :
CR Construction Company Limited

STRUCTURAL ENGINEER :
AECOM

FACADE CONSULTANT:
AECOM

NOTE :
1. ALL DIMENSIONS ARE IN mm.
2. ALL ELEVATIONS ARE VIEWED FROM OUTSIDE.
3. ALL DIMENSIONS TO BE VERIFIED ON SITE BEFORE FABRICATION.

LEGEND :
X1 — DETAIL MARK NO.
X001 — REFER SHEET NO.

1. F.F.L. --FINISHED FLOOR LEVEL
2. S.F.L. --STRUCTURAL FLOOR LEVEL
3. /R --REVERSED DETAIL

NO.	DATE	REVISED	BY
A	15/02/2019	GENERAL REVISED	

JOB NO. : J-837

PROJECT :
URA KWUN TONG TOWN CENTRE REDEVELOPMENT (AREA 2 & 3) AT NKIL 6514, KWUN TONG, KWLOON

TITLE :
TYPICAL TRANSOM DETAIL FOR CURTAIN WALL

DATE : 28-JAN-19 | SCALE : 1:2 (A1)

DRAWN BY : ASING | CHECKED BY : --

美特鋁質有限公司
MIDI ALUMINIUM FABRICATOR LTD.
Units 6-8, Sunray Industrial Centre, 1/F
610 Cha Kwo Ling Road, Kowloon
Tel:23489211-4 Fax:(852)27727666

DWG NO. : J837-CW-6025 | REV. : A

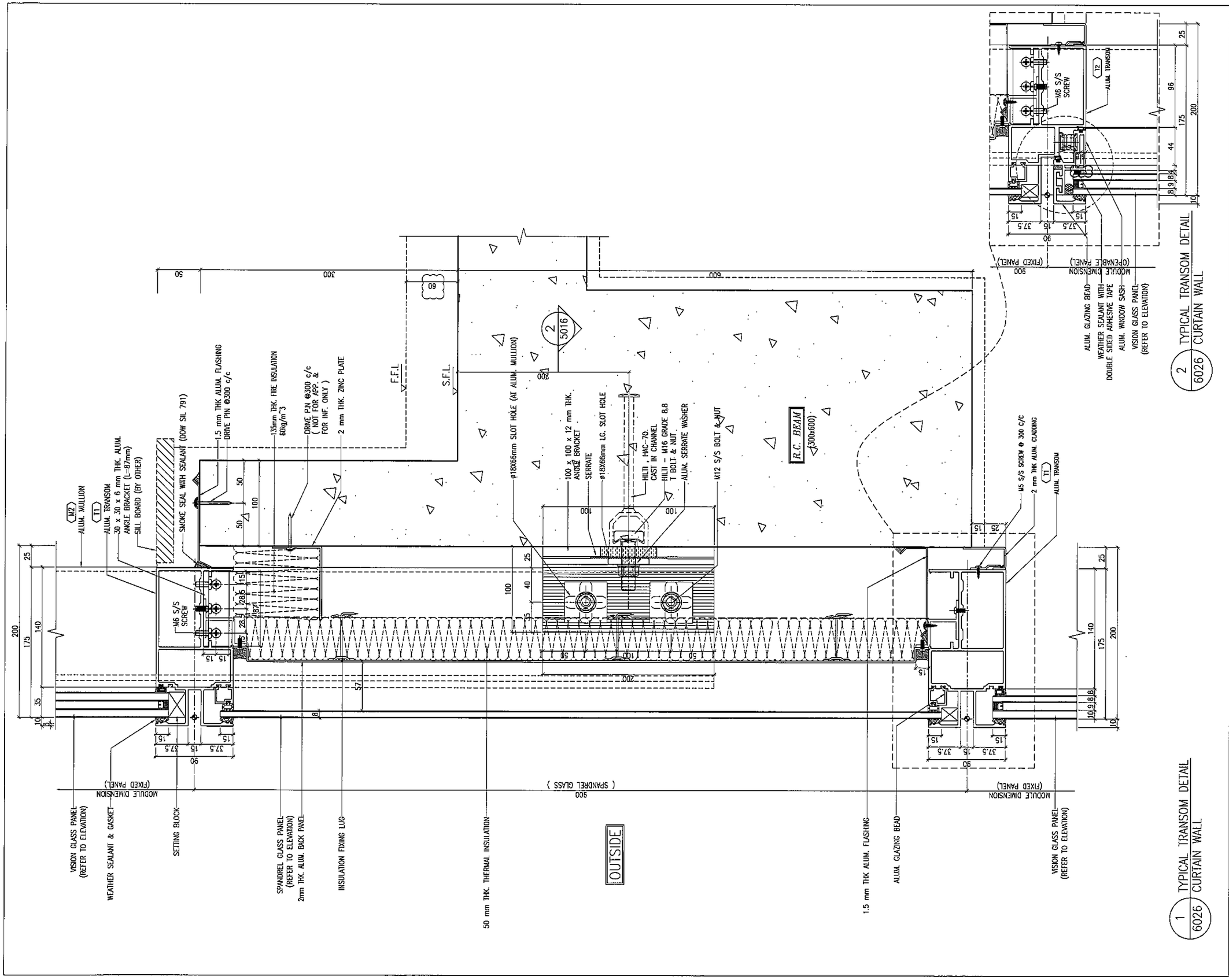

B.D. REF :

CLIENT :
信和置業有限公司
Sino Land Company Limited

ARCHITECT :
WONG TUNG & PARTNERS LIMITED
ARCHITECTS & PLANNERS

MAIN CONTRACTOR :
CR Construction Company Limited

STRUCTURAL ENGINEER :
AECOM

FACADE CONSULTANT:
AECOM

NOTE :
1. ALL DIMENSIONS ARE IN mm.
2. ALL ELEVATIONS ARE VIEWED FROM OUTSIDE.
3. ALL DIMENSIONS TO BE VERIFIED ON SITE BEFORE FABRICATION.

LEGEND :
X1 — DETAIL MARK NO.
X001 — REFER SHEET NO.

1. F.F.L. --FINISHED FLOOR LEVEL
2. S.F.L. --STRUCTURAL FLOOR LEVEL
3. /R --REVERSED DETAIL

NO.	DATE	REVISED	BY
A	15/02/2019	GENERAL REVISED	

JOB NO. : J-837

PROJECT :
URA KWUN TONG TOWN CENTRE REDEVELOPMENT (AREA 2 & 3) AT NKIL 6514, KWUN TONG, KWLOON

TITLE :
TYPICAL TRANSOM DETAIL FOR CURTAIN WALL

DATE : 28-JAN-19 | SCALE : 1:2 (A1)

DRAWN BY : ASING | CHECKED BY : -

美特鋁質有限公司
MIDI ALUMINIUM FABRICATOR LTD.
Units 6-8, Sunray Industrial Centre, 1/F
610 Cha Kwo Ling Road, Kowloon
Tel:23489211~4 Fax:(852)27727666

DWG NO. : JB37-CW-6026 | REV. : A

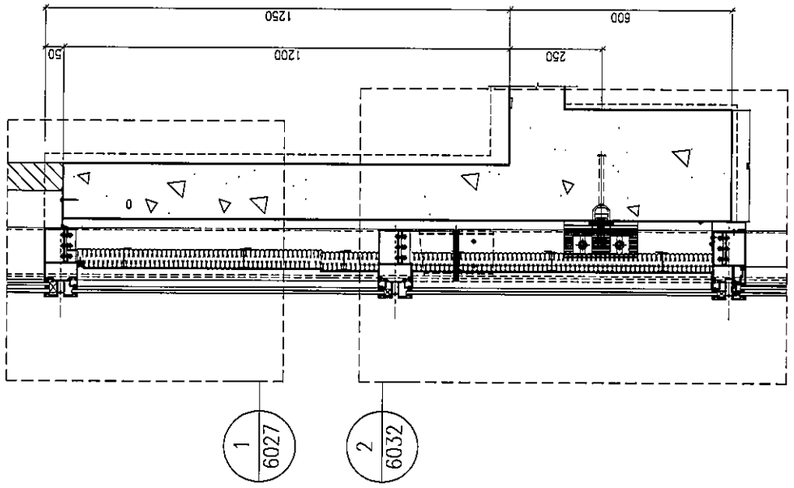

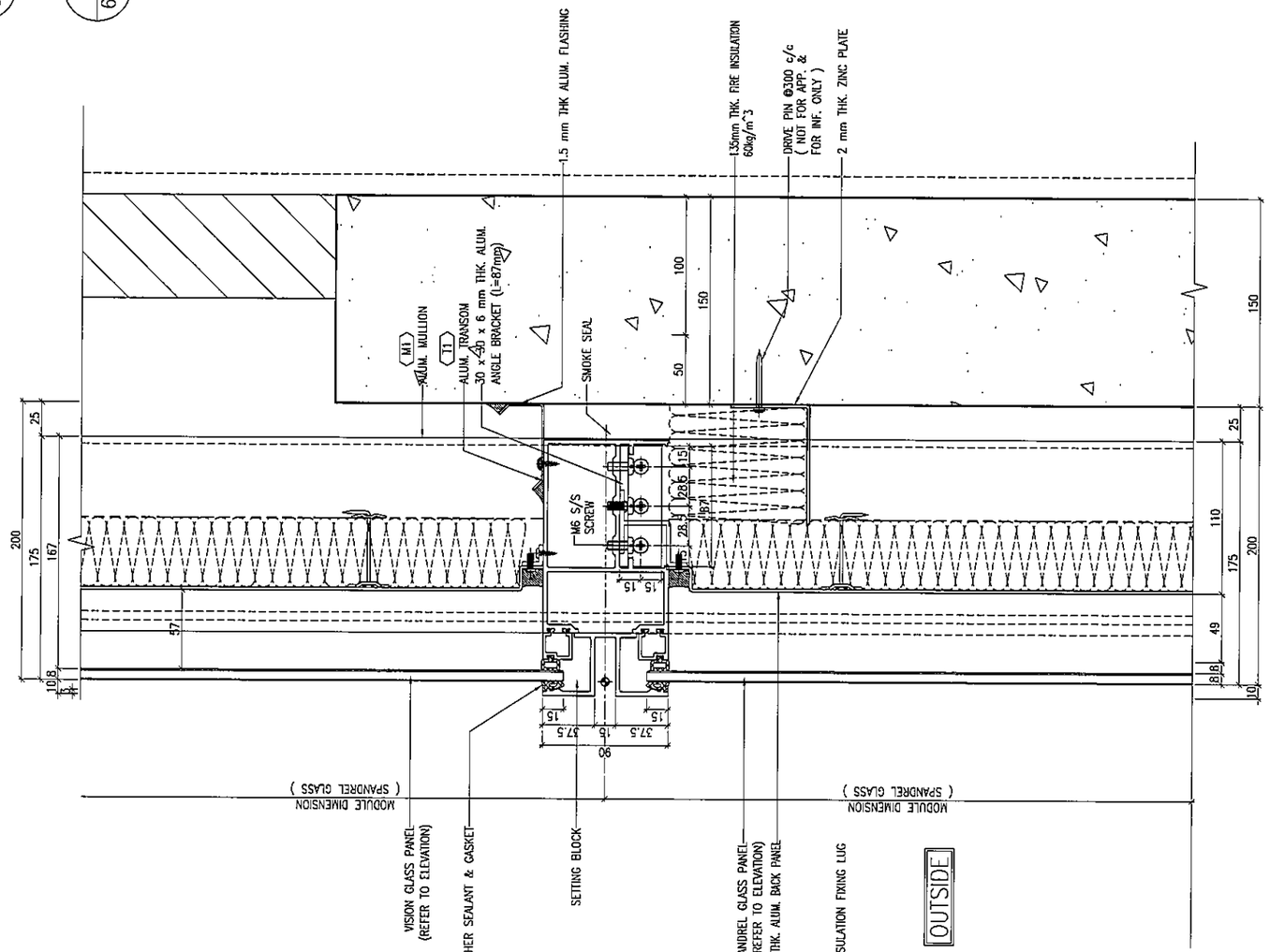

1 / 6027 TYPICAL TRANSOM DETAIL CURTAIN WALL

B.D. REF :

CLIENT :
信和置業有限公司
Sino Land Company Limited

ARCHITECT :
WONG TUNG & PARTNERS LIMITED
ARCHITECTS & PLANNERS

MAIN CONTRACTOR :
CR Construction Company Limited

STRUCTURAL ENGINEER :
AECOM

FACADE CONSULTANT:
AECOM

NOTE :
1. ALL DIMENSIONS ARE IN mm.
2. ALL ELEVATIONS ARE VIEWED FROM OUTSIDE.
3. ALL DIMENSIONS TO BE VERIFIED ON SITE BEFORE FABRICATION.

LEGEND :
X1 / XOO1 — DETAIL MARK NO. / REFER SHEET NO.
1. F.F.L. --FINISHED FLOOR LEVEL
2. S.F.L. --STRUCTURAL FLOOR LEVEL
3. /R --REVERSED DETAIL

NO.	DATE	REVISED	BY

JOB NO. : J-837

PROJECT :
URA KWUN TONG TOWN CENTRE REDEVELOPMENT (AREA 2 & 3) AT NKIL 6514, KWUN TONG, KWLOON

TITLE :
TYPICAL TRANSOM DETAIL FOR CURTAIN WALL

DATE : 28-JAN-19	SCALE : 1:2 (A1)
DRAWN BY : ASING	CHECKED BY : -

美特鋁質有限公司
MIDI ALUMINIUM FABRICATOR LTD.
Units 6-8, Sunray Industrial Centre, 1/F
610 Cha Kwo Ling Road, Kowloon
Tel:23489211-4 Fax:(852)27727666

DWG NO. : J837-CW-6027 REV. : -

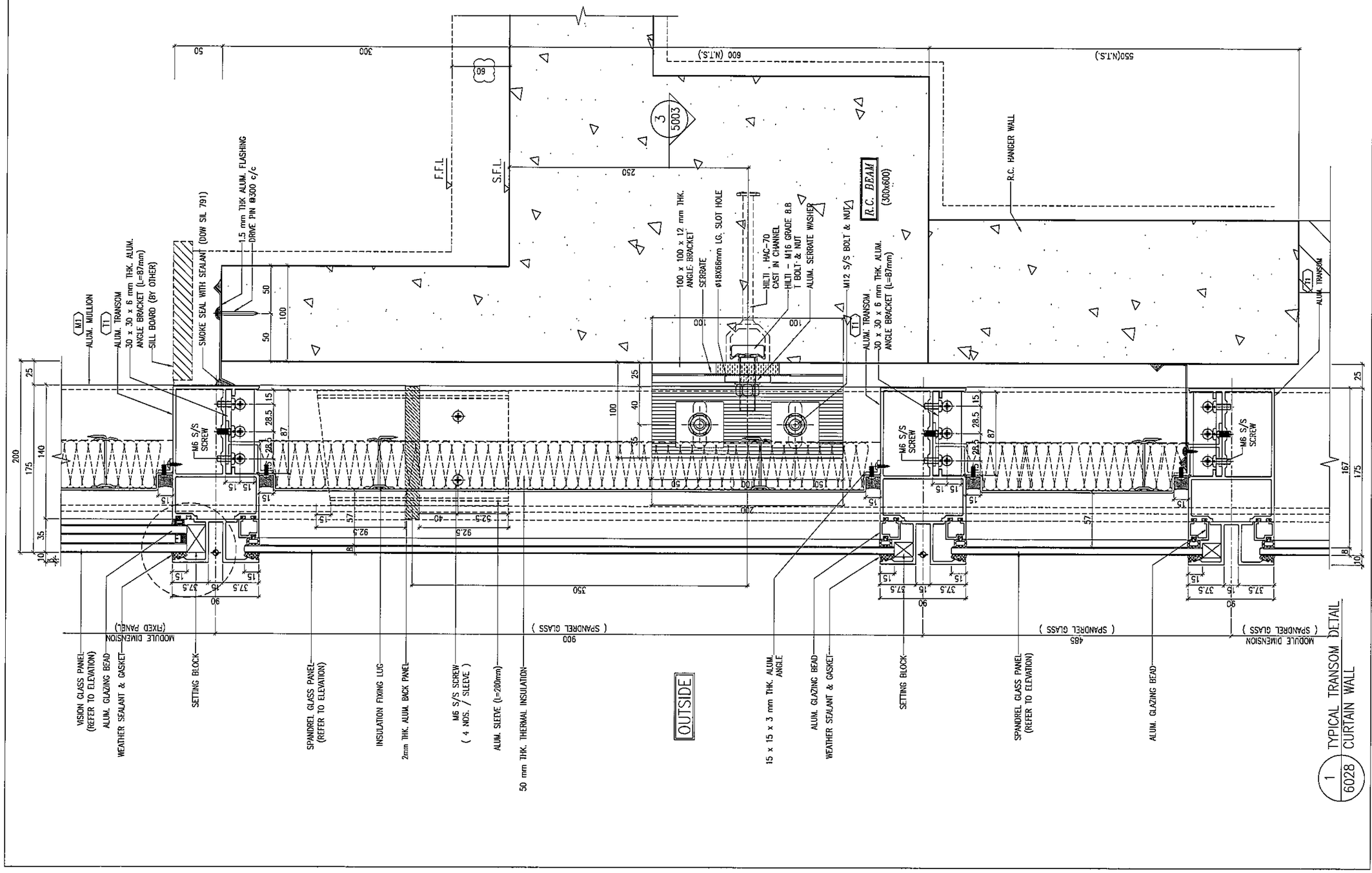

B.D. REF :

CLIENT :
信和置業有限公司
Sino Land Company Limited

ARCHITECT :
WONG TUNG & PARTNERS LIMITED
ARCHITECTS & PLANNERS

MAIN CONTRACTOR :
CR Construction Company Limited

STRUCTURAL ENGINEER :
AECOM

FACADE CONSULTANT:
AECOM

NOTE :
1. ALL DIMENSIONS ARE IN mm.
2. ALL ELEVATIONS ARE VIEWED FROM OUTSIDE.
3. ALL DIMENSIONS TO BE VERIFIED ON SITE BEFORE FABRICATION.

LEGEND :
X1 / XOO1 — DETAIL MARK NO. / REFER SHEET NO.
1. F.F.L. --FINISHED FLOOR LEVEL
2. S.F.L. --STRUCTURAL FLOOR LEVEL
3. /R --REVERSED DETAIL

NO.	DATE	REVISED	BY
A	15/02/2019	GENERAL REVISED	

JOB NO. : J-837

PROJECT :
URA KWUN TONG TOWN CENTRE REDEVELOPMENT (AREA 2 & 3) AT NKIL 6514, KWUN TONG, KWLOON

TITLE :
TYPICAL TRANSOM DETAIL FOR CURTAIN WALL

DATE : 28-JAN-19	SCALE : 1:2 (A1)
DRAWN BY : ASING	CHECKED BY : -

美特鋁質有限公司
MIDI ALUMINIUM FABRICATOR LTD.
Units 6-8, Sunray Industriol Centre, 1/F
610 Cha Kwo Ling Road, Kowloon
Tel:23489211-4 Fax:(852)27727666

DWG NO. : J837-CW-6028 | REV. : A

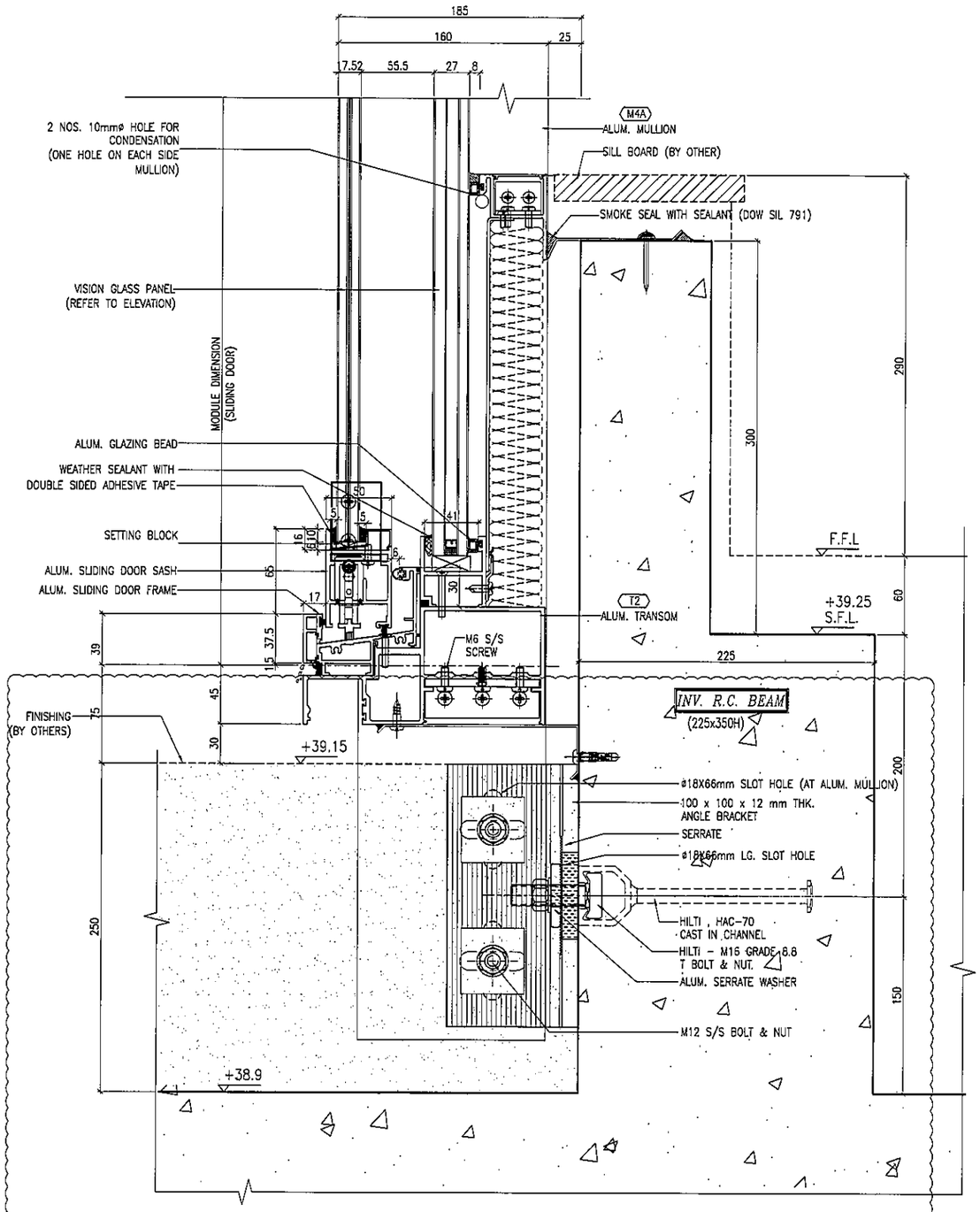

1 / 6029 TYPICAL BOTTOM SECTION DETAIL CURTAIN WALL

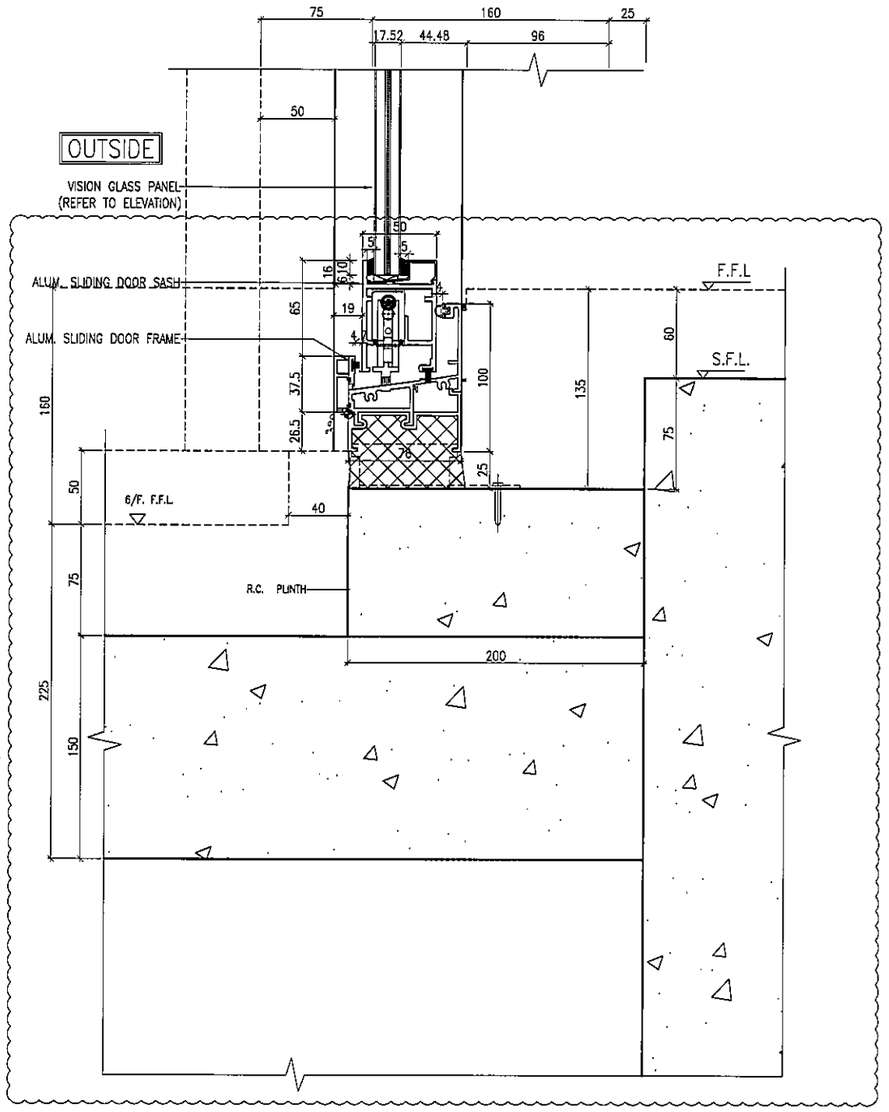

2 / 6029 TYPICAL BOTTOM SECTION DETAIL CURTAIN WALL

B.D. REF :

CLIENT :
信和置業有限公司
Sino Land Company Limited

ARCHITECT :
WONG TUNG & PARTNERS LIMITED
ARCHITECTS & PLANNERS

MAIN CONTRACTOR :
CR Construction Company Limited

STRUCTURAL ENGINEER :
AECOM

FACADE CONSULTANT:
AECOM

NOTE :
1. ALL DIMENSIONS ARE IN mm.
2. ALL ELEVATIONS ARE VIEWED FROM OUTSIDE.
3. ALL DIMENSIONS TO BE VERIFIED ON SITE BEFORE FABRICATION.

LEGEND :
X1 / X001 — DETAIL MARK NO. / REFER SHEET NO.
1. F.F.L. --FINISHED FLOOR LEVEL
2. S.F.L. --STRUCTURAL FLOOR LEVEL
3. /R --REVERSED DETAIL

NO.	DATE	REVISED	BY
B	16/06/2019	GENERAL REVISED	
A	15/02/2019	GENERAL REVISED	

JOB NO. : J-837

PROJECT :
URA KWUN TONG TOWN CENTRE REDEVELOPMENT (AREA 2 & 3) AT NKIL 6514, KWUN TONG, KWLOON

TITLE :
TYPICAL TRANSOM DETAIL FOR CURTAIN WALL

DATE : 28-JAN-19 | SCALE : 1:2 (A1)

DRAWN BY : ASING | CHECKED BY : -

美特鋁質有限公司
MIDI ALUMINIUM FABRICATOR LTD.
Units 6-8, Sunray Industrial Centre, 1/F
610 Cha Kwo Ling Road, Kowloon
Tel:23489211-4 Fax:(852)27727666

DWG NO. : J837-CW-6029 | REV. : B

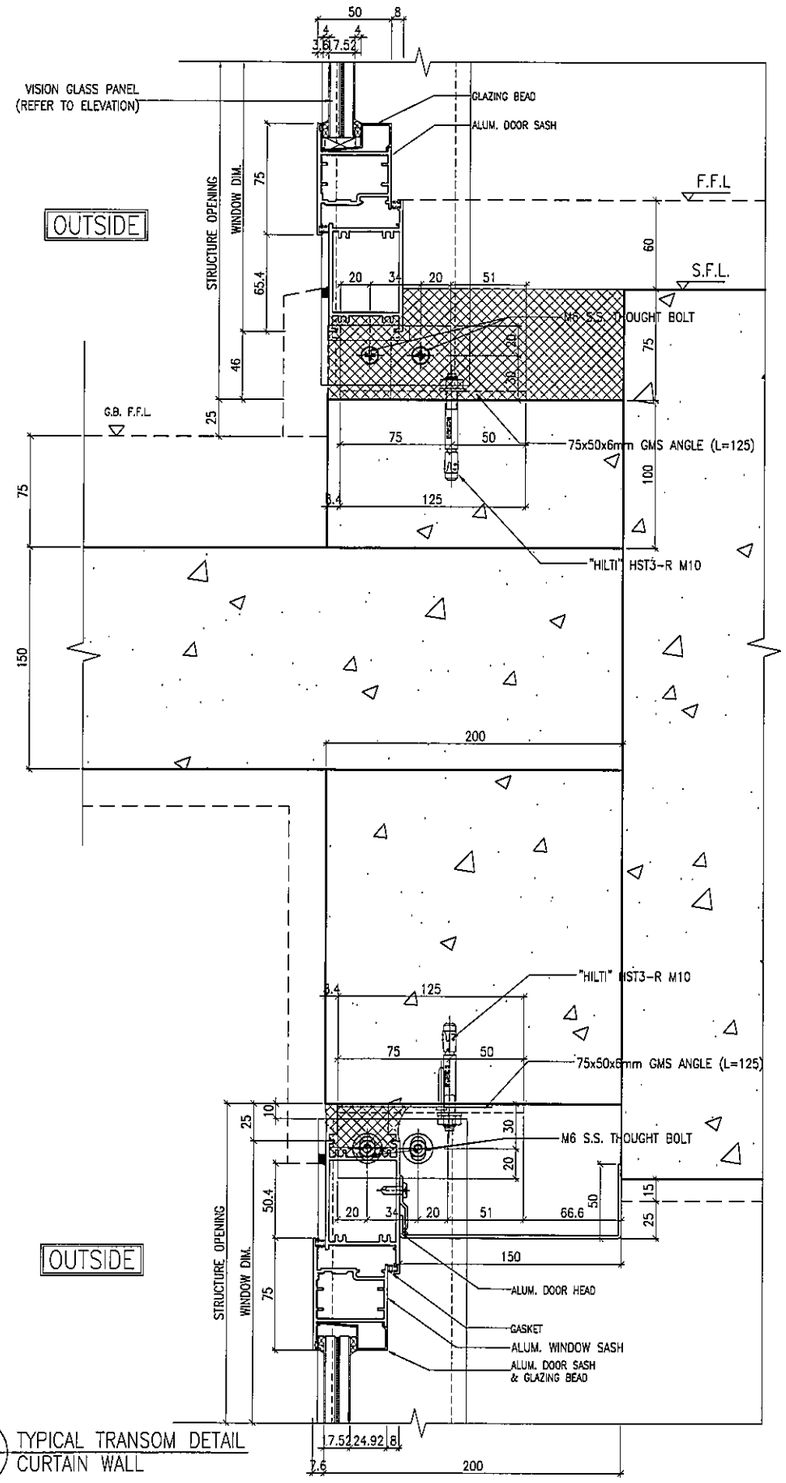

1 / 6030 TYPICAL TRANSOM DETAIL CURTAIN WALL

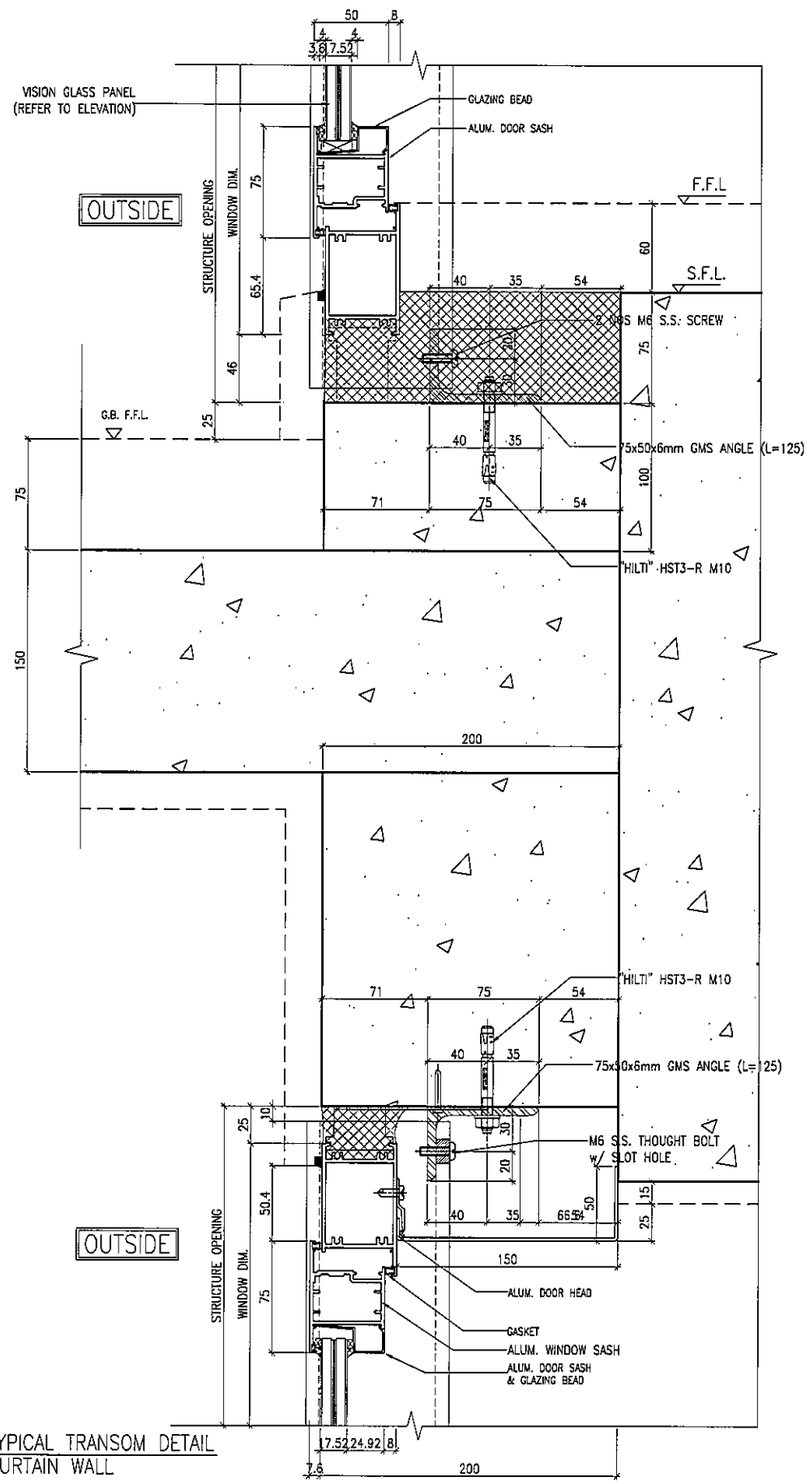

2 / 6030 TYPICAL TRANSOM DETAIL CURTAIN WALL

B.D. REF :

CLIENT :
信和置業有限公司
Sino Land Company Limited

ARCHITECT :
WONG TUNG & PARTNERS LIMITED
ARCHITECTS & PLANNERS

MAIN CONTRACTOR :
CR Construction Company Limited

STRUCTURAL ENGINEER :
AECOM

FACADE CONSULTANT:
AECOM

NOTE :
1. ALL DIMENSIONS ARE IN mm.
2. ALL ELEVATIONS ARE VIEWED FROM OUTSIDE.
3. ALL DIMENSIONS TO BE VERIFIED ON SITE BEFORE FABRICATION.

LEGEND :
X1 / X001 — DETAIL MARK NO. / REFER SHEET NO.
1. F.F.L. --FINISHED FLOOR LEVEL
2. S.F.L. --STRUCTURAL FLOOR LEVEL
3. /R --REVERSED DETAIL

NO.	DATE	REVISED	BY

JOB NO. : J-837

PROJECT :
URA KWUN TONG TOWN CENTRE REDEVELOPMENT (AREA 2 & 3) AT NKIL 6514, KWUN TONG, KWLOON

TITLE :
TYPICAL TRANSOM DETAIL FOR CURTAIN WALL

DATE : 15-FEB-19 | SCALE : 1:2 (A1)

DRAWN BY : ASING | CHECKED BY : -

美特鋁質有限公司
MIDI ALUMINIUM FABRICATOR LTD.
Units 6-8, Sunray Industrial Centre, 1/F
610 Cha Kwo Ling Road, Kowloon
Tel:23489211-4 Fax:(852)27727666

DWG NO. : J837-CW-6030 | REV. : -

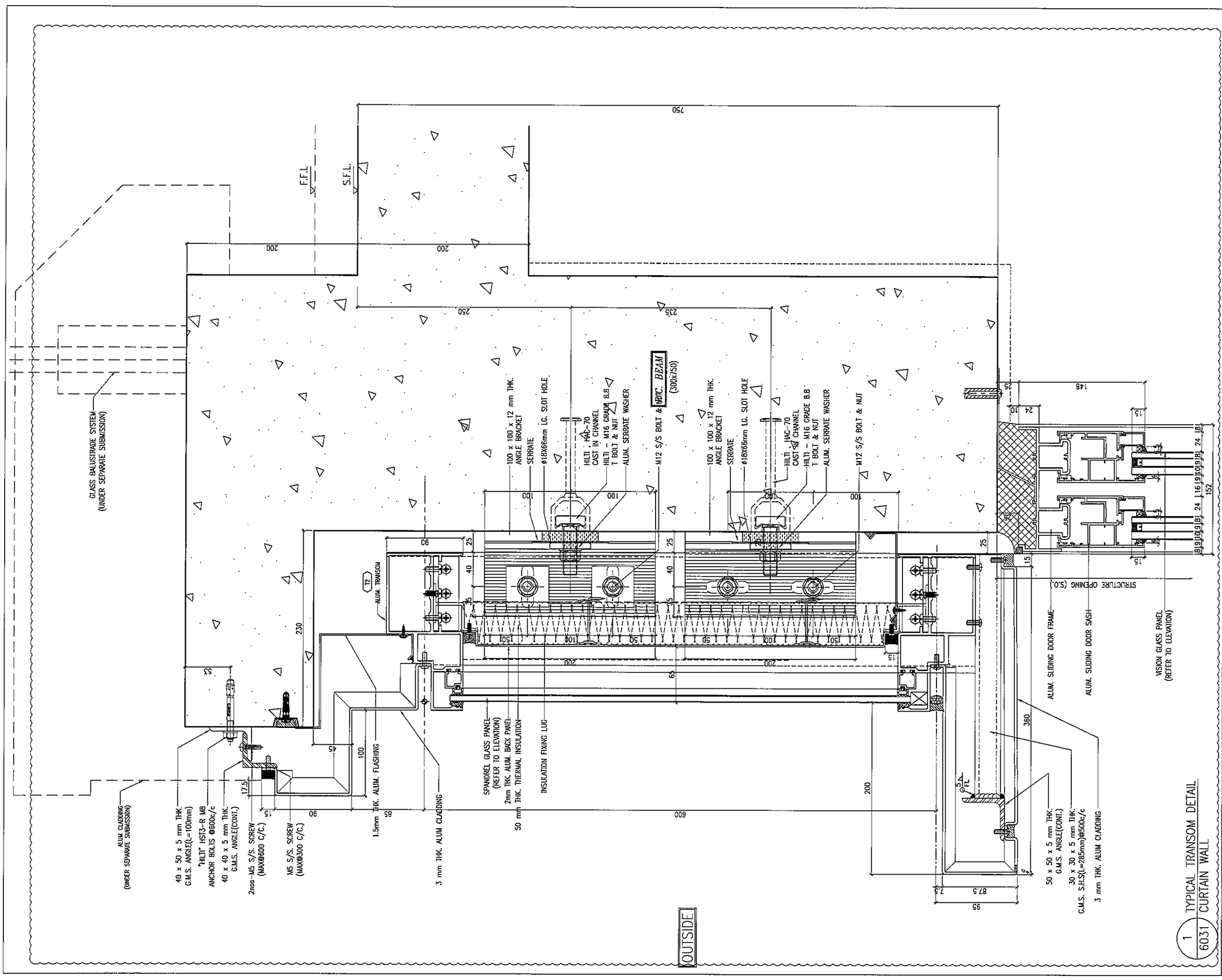

1 TYPICAL TRANSOM DETAIL
6031 CURTAIN WALL

B.D. REF :

CLIENT :
信和置業有限公司
Sino Land Company Limited

ARCHITECT :
WONG TUNG & PARTNERS LIMITED
ARCHITECTS & PLANNERS

MAIN CONTRACTOR :
CR Construction Company Limited

STRUCTURAL ENGINEER :
AECOM

FACADE CONSULTANT:
AECOM

NOTE :
1. ALL DIMENSIONS ARE IN mm.
2. ALL ELEVATIONS ARE VIEWED FROM OUTSIDE.
3. ALL DIMENSIONS TO BE VERIFIED ON SITE BEFORE FABRICATION.

LEGEND :
X1 — DETAIL MARK NO.
X001 — REFER SHEET NO.
1. F.F.L. --FINISHED FLOOR LEVEL
2. S.F.L. --STRUCTURAL FLOOR LEVEL
3. (R) --REVERSED DETAIL

NO.	DATE	REVISED	BY
A	16/06/2019	GENERAL REVISED	

JOB NO. : J-837

PROJECT :
URA KWUN TONG TOWN CENTRE
REDEVELOPMENT (AREA 2 & 3) AT
NKIL 6514, KWUN TONG, KWLOON

TITLE :
TYPICAL TRANSOM DETAIL
FOR CURTAIN WALL

DATE : 18-FEB-19 | SCALE : 1:2 (A1)

DRAWN BY : ASING | CHECKED BY : -

美特鋁製有限公司
MIDI ALUMINIUM FABRICATOR LTD.
Units 6-8, Sunray Industrial Centre, 1/F
610 Cha Kwo Ling Road, Kowloon
Tel:23489211-4 Fax:(852)27727666

DWG NO. : J837-CW-6031 | REV. : A

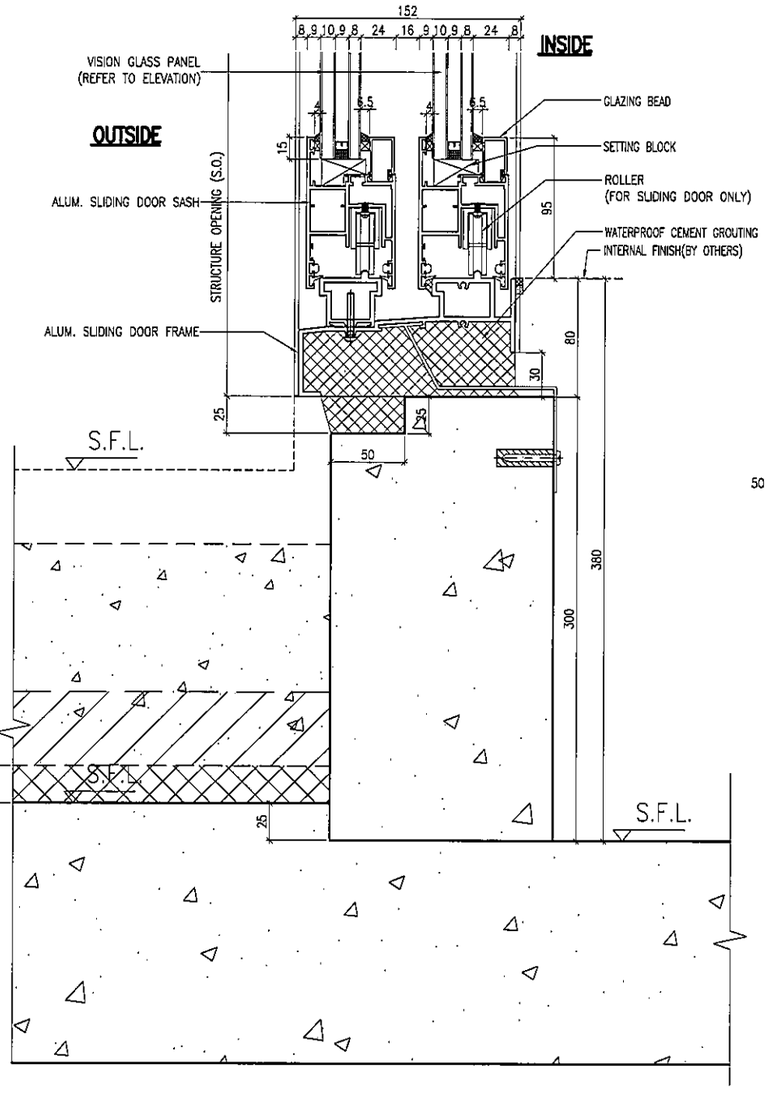

1 / 6032 TYPICAL TRANSOM DETAIL CURTAIN WALL

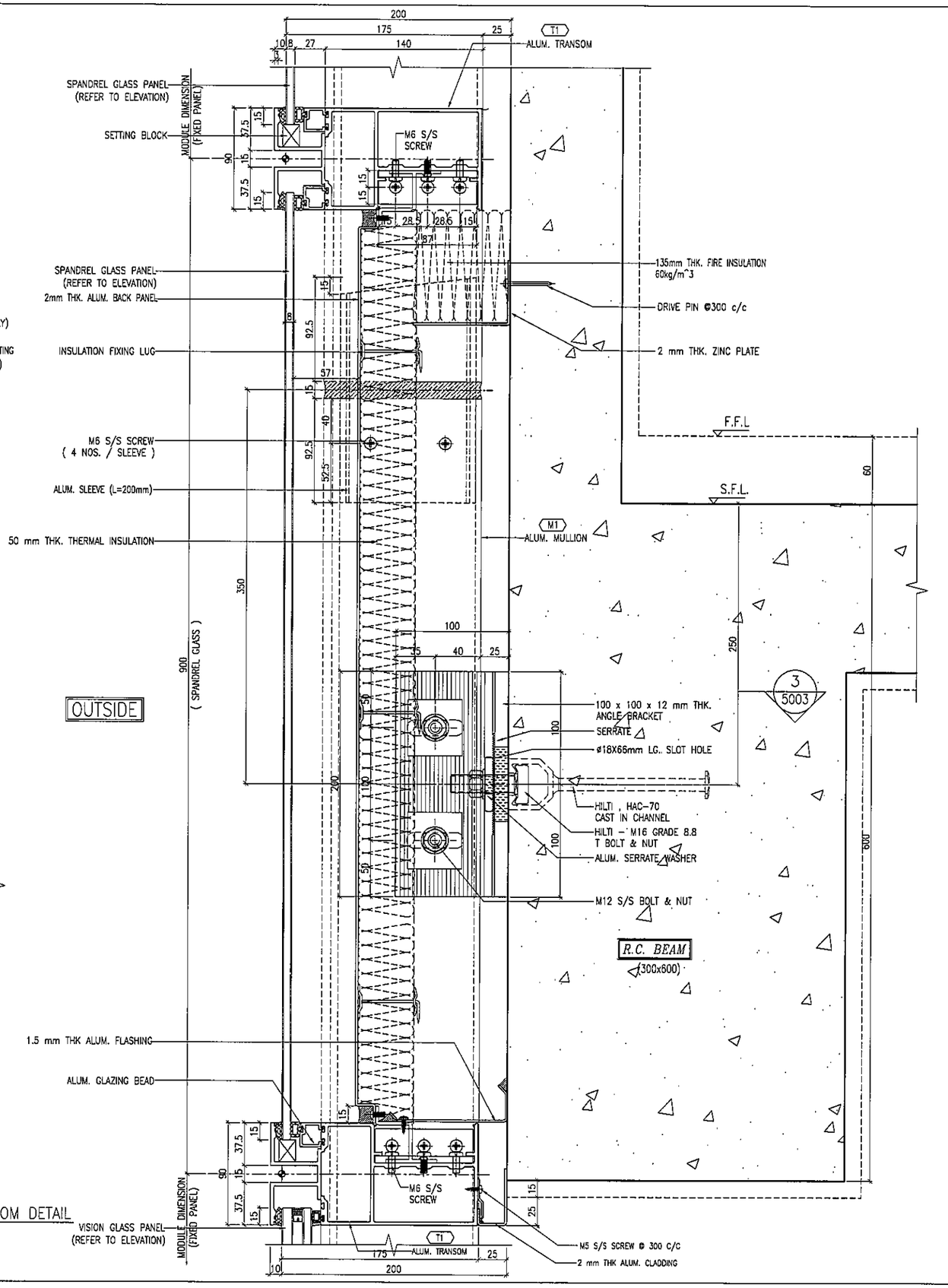

2 / 6032 TYPICAL TRANSOM DETAIL CURTAIN WALL

B.D. REF :

CLIENT :
信和置業有限公司
Sino Land Company Limited

ARCHITECT :
WONG TUNG & PARTNERS LIMITED
ARCHITECTS & PLANNERS

MAIN CONTRACTOR :
CR Construction Company Limited

STRUCTURAL ENGINEER :
AECOM

FACADE CONSULTANT:
AECOM

NOTE :
1. ALL DIMENSIONS ARE IN mm.
2. ALL ELEVATIONS ARE VIEWED FROM OUTSIDE.
3. ALL DIMENSIONS TO BE VERIFIED ON SITE BEFORE FABRICATION.

LEGEND :
X1 / X001 — DETAIL MARK NO. / REFER SHEET NO.
1. F.F.L. --FINISHED FLOOR LEVEL
2. S.F.L. --STRUCTURAL FLOOR LEVEL
3. (R) --REVERSED DETAIL

NO.	DATE	REVISED	BY

JOB NO. : J-837

PROJECT :
URA KWUN TONG TOWN CENTRE REDEVELOPMENT (AREA 2 & 3) AT NKIL 6514, KWUN TONG, KWLOON

TITLE :
TYPICAL TRANSOM DETAIL FOR CURTAIN WALL

DATE : 18-FEB-19 | SCALE : 1:2 (A1)

DRAWN BY : ASING | CHECKED BY : -

美特鋁質有限公司
MIDI ALUMINIUM FABRICATOR LTD.
Units 6-8, Sunray Industrial Centre, 1/F
610 Cha Kwo Ling Road, Kowloon
Tel:23489211-4 Fax:(852)27727666

DWG NO. : J837-CW-6032 | REV. : -

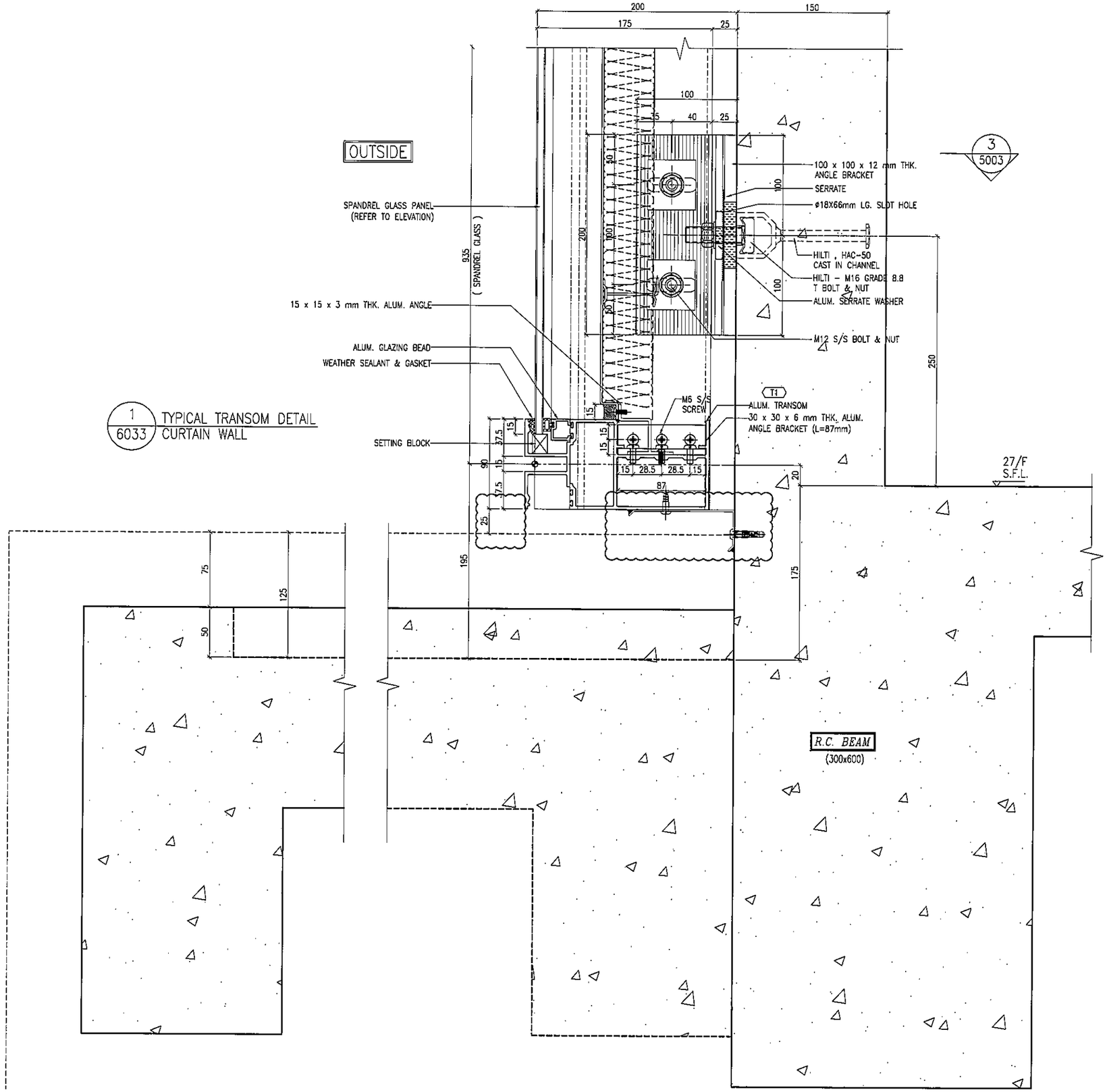

1 / 6033 TYPICAL TRANSOM DETAIL
CURTAIN WALL

B.D. REF :

CLIENT :
信和置業有限公司
Sino Land Company Limited

ARCHITECT :
WONG TUNG & PARTNERS LIMITED
ARCHITECTS & PLANNERS

MAIN CONTRACTOR :
CR Construction Company Limited

STRUCTURAL ENGINEER :
AECOM

FACADE CONSULTANT:
AECOM

NOTE :
1. ALL DIMENSIONS ARE IN mm.
2. ALL ELEVATIONS ARE VIEWED FROM OUTSIDE.
3. ALL DIMENSIONS TO BE VERIFIED ON SITE BEFORE FABRICATION.

LEGEND :
X1 / X001 — DETAIL MARK NO. / REFER SHEET NO.
1. F.F.L. --FINISHED FLOOR LEVEL
2. S.F.L. --STRUCTURAL FLOOR LEVEL
3. /R --REVERSED DETAIL

NO.	DATE	REVISED	BY
A	01/04/2019	GENERAL REVISED	

JOB NO. : J-837

PROJECT :
URA KWUN TONG TOWN CENTRE
REDEVELOPMENT (AREA 2 & 3) AT
NKIL 6514, KWUN TONG, KWLOON

TITLE :
TYPICAL TRANSOM DETAIL
FOR CURTAIN WALL

DATE : 13-JUL-18 | SCALE : 1:2 (A1)

DRAWN BY : ASING | CHECKED BY : -

美特鋁質有限公司
MIDI ALUMINIUM FABRICATOR LTD.
Units 6-8, Sunray Industrial Centre, 1/F
610 Cha Kwo Ling Road, Kowloon
Tel:23489211-4 Fax:(852)27727666

DWG NO. : J837-CW-6033 | REV. : A

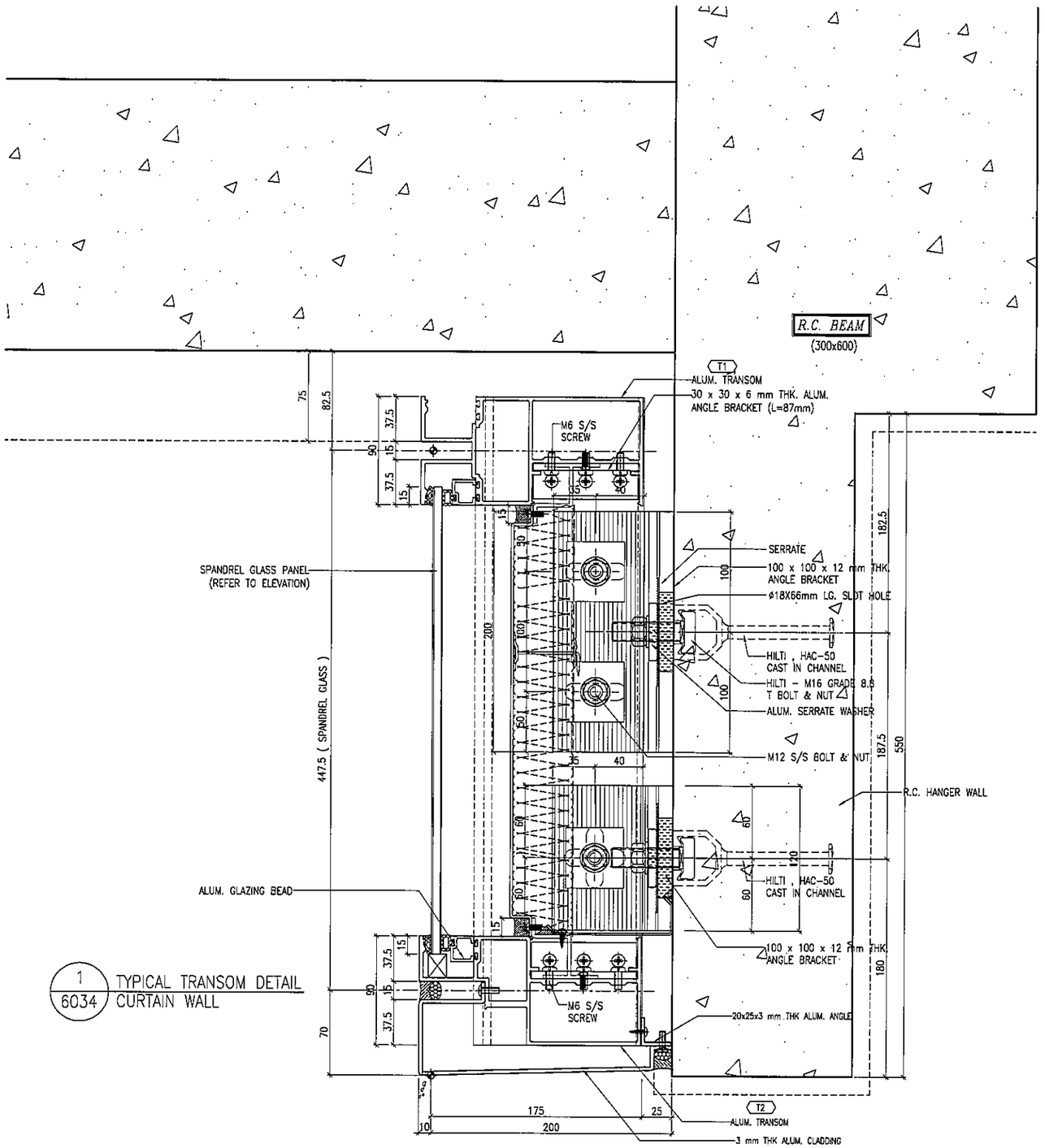

1/6034 TYPICAL TRANSOM DETAIL CURTAIN WALL

B.D. REF :

CLIENT :
信和置業有限公司
Sino Land Company Limited

ARCHITECT :
WONG TUNG & PARTNERS LIMITED
ARCHITECTS & PLANNERS

MAIN CONTRACTOR :
CR Construction Company Limited

STRUCTURAL ENGINEER :
AECOM

FACADE CONSULTANT:
AECOM

NOTE :
1. ALL DIMENSIONS ARE IN mm.
2. ALL ELEVATIONS ARE VIEWED FROM OUTSIDE.
3. ALL DIMENSIONS TO BE VERIFIED ON SITE BEFORE FABRICATION.

LEGEND :
X1 / X001 — DETAIL MARK NO. / REFER SHEET NO.
1. F.F.L. --FINISHED FLOOR LEVEL
2. S.F.L. --STRUCTURAL FLOOR LEVEL
3. (R) --REVERSED DETAIL

NO.	DATE	REVISED	BY

JOB NO. : J-837

PROJECT :
URA KWUN TONG TOWN CENTRE
REDEVELOPMENT (AREA 2 & 3) AT
NKIL 6514, KWUN TONG, KWLOON

TITLE :
TYPICAL TRANSOM DETAIL
FOR CURTAIN WALL

DATE : 13-JUL-18 | SCALE : 1:2 (A1)

DRAWN BY : ASING | CHECKED BY : -

美特鋁質有限公司
MIDI ALUMINIUM FABRICATOR LTD.
Units 6-8, Sunray Industrial Centre, 1/F
610 Cha Kwo Ling Road, Kowloon
Tel:23489211-4 Fax:(852)27727686

DWG NO. : J837-CW-6034 | REV. : -

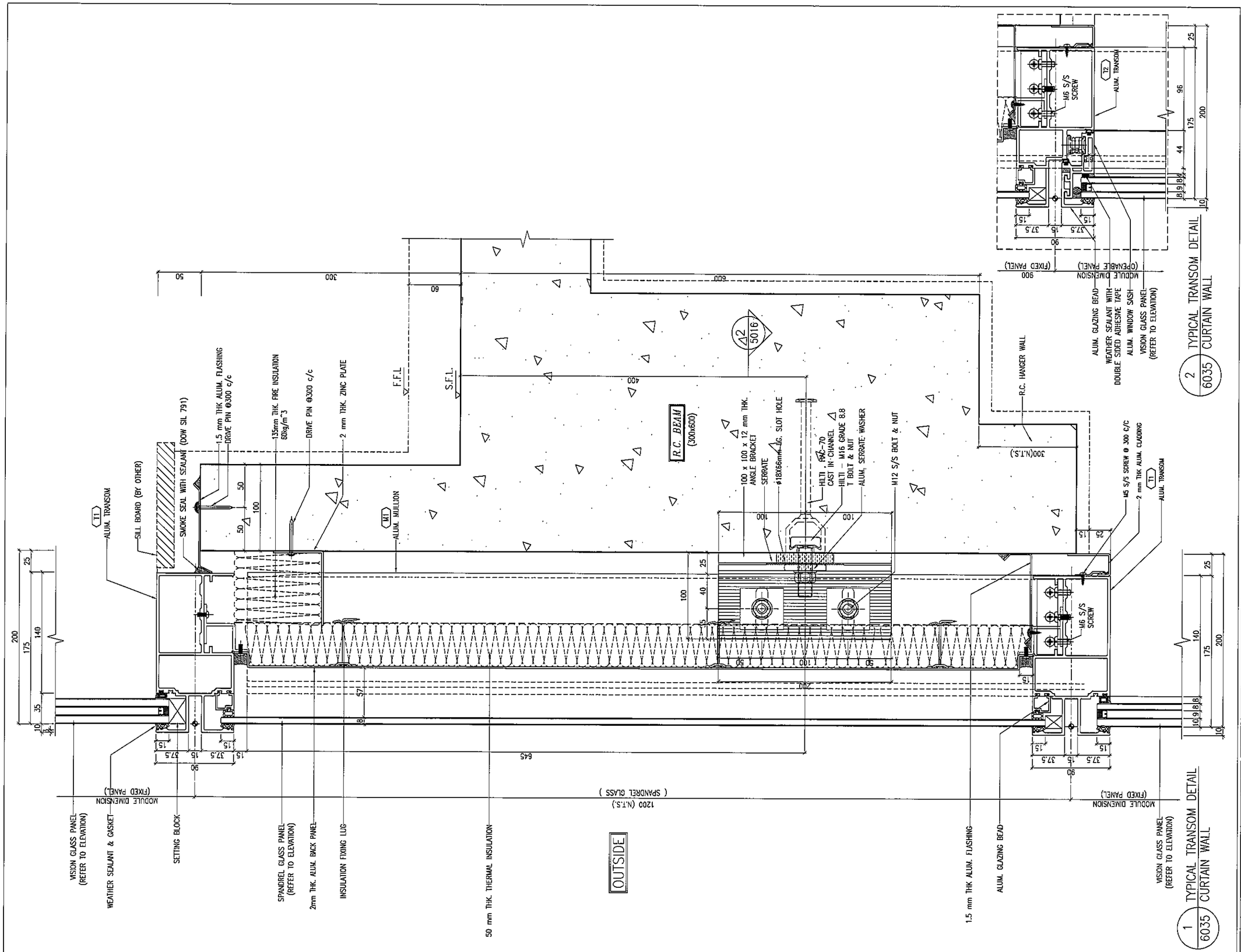

B.D. REF :

CLIENT :
信和置業有限公司
Sino Land Company Limited

ARCHITECT :
WONG TUNG & PARTNERS LIMITED
ARCHITECTS & PLANNERS

MAIN CONTRACTOR :
CR Construction Company Limited

STRUCTURAL ENGINEER :
AECOM

FACADE CONSULTANT:
AECOM

NOTE :
1. ALL DIMENSIONS ARE IN mm.
2. ALL ELEVATIONS ARE VIEWED FROM OUTSIDE.
3. ALL DIMENSIONS TO BE VERIFIED ON SITE BEFORE FABRICATION.

LEGEND :
- X1 / X001 — DETAIL MARK NO. / REFER SHEET NO.
1. F.F.L. --FINISHED FLOOR LEVEL
2. S.F.L. --STRUCTURAL FLOOR LEVEL
3. /R --REVERSED DETAIL

NO.	DATE	REVISED	BY

JOB NO. : J-837

PROJECT :
URA KWUN TONG TOWN CENTRE REDEVELOPMENT (AREA 2 & 3) AT NKIL 6514, KWUN TONG, KWLOON

TITLE :
TYPICAL TRANSOM DETAIL FOR CURTAIN WALL

DATE : 28-JAN-19	SCALE : 1:2 (A1)
DRAWN BY : ASING	CHECKED BY : -

美特鋁製有限公司
MIDI ALUMINIUM FABRICATOR LTD.
Units 6-8, Sunray Industrial Centre, 1/F
610 Cha Kwo Ling Road, Kowloon
Tel:23489211-4 Fax:(852)27727666

DWG NO. : J837-CW-6035 | REV. : -

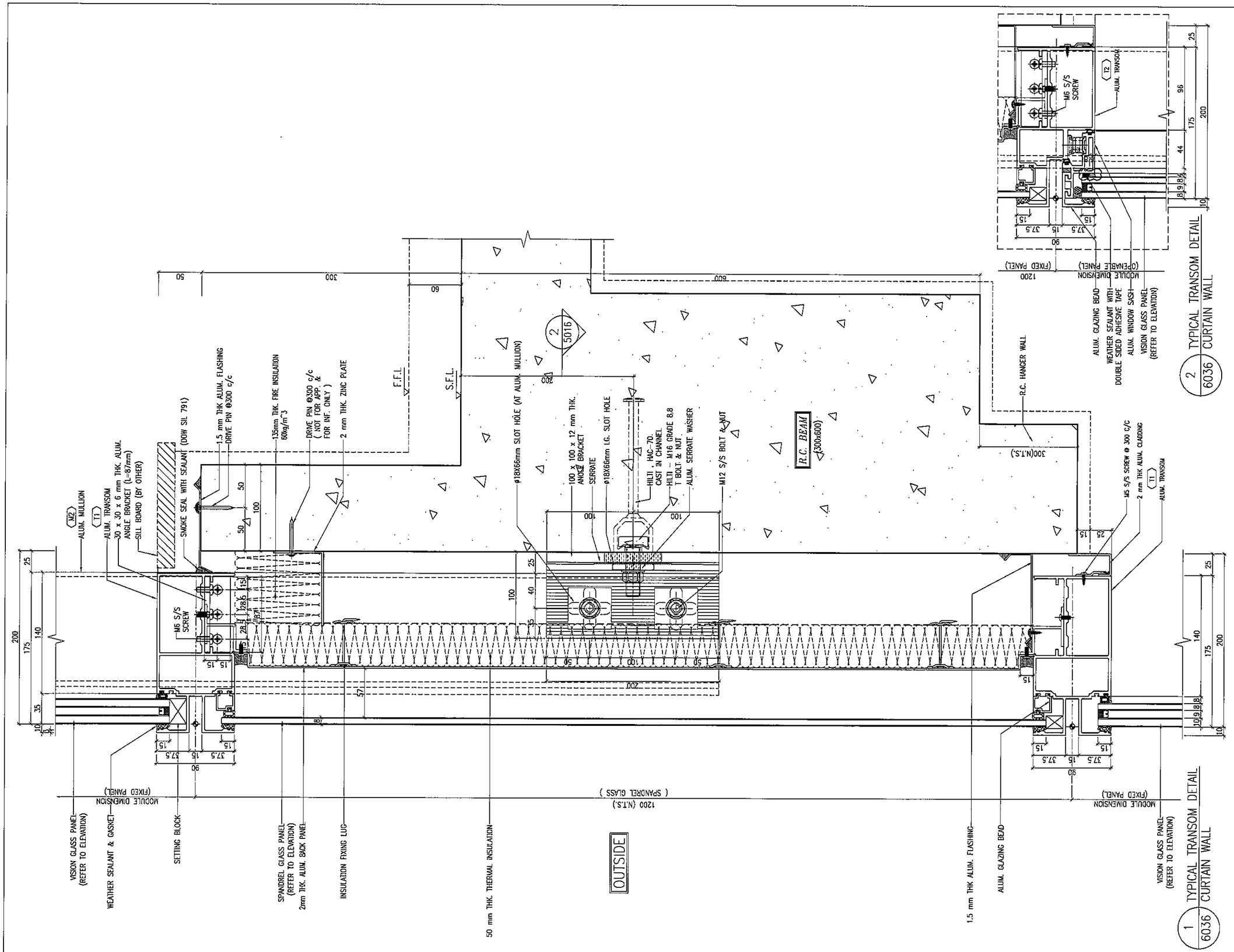

B.D. REF :

CLIENT :
信和置業有限公司
Sino Land Company Limited

ARCHITECT :
WONG TUNG & PARTNERS LIMITED
ARCHITECTS & PLANNERS

MAIN CONTRACTOR :
CR Construction Company Limited

STRUCTURAL ENGINEER :
AECOM

FACADE CONSULTANT:
AECOM

NOTE :
1. ALL DIMENSIONS ARE IN mm.
2. ALL ELEVATIONS ARE VIEWED FROM OUTSIDE.
3. ALL DIMENSIONS TO BE VERIFIED ON SITE BEFORE FABRICATION.

LEGEND :
X1 — DETAIL MARK NO.
X001 — REFER SHEET NO.
1. F.F.L. --FINISHED FLOOR LEVEL
2. S.F.L. --STRUCTURAL FLOOR LEVEL
3. /R --REVERSED DETAIL

NO.	DATE	REVISED	BY

JOB NO. : J-837

PROJECT :
URA KWUN TONG TOWN CENTRE REDEVELOPMENT (AREA 2 & 3) AT NKIL 6514, KWUN TONG, KWLOON

TITLE :
TYPICAL TRANSOM DETAIL FOR CURTAIN WALL

DATE : 28-JAN-19 | SCALE : 1:2 (A1)

DRAWN BY : ASING | CHECKED BY : -

美特鋁質有限公司
MIDI ALUMINIUM FABRICATOR LTD.
Units 6-8, Sunray Industrial Centre, 1/F
610 Cha Kwo Ling Road, Kowloon
Tel:23489211-4 Fax:(852)27727666

DWG NO. : J837-CW-6036 | REV. : -

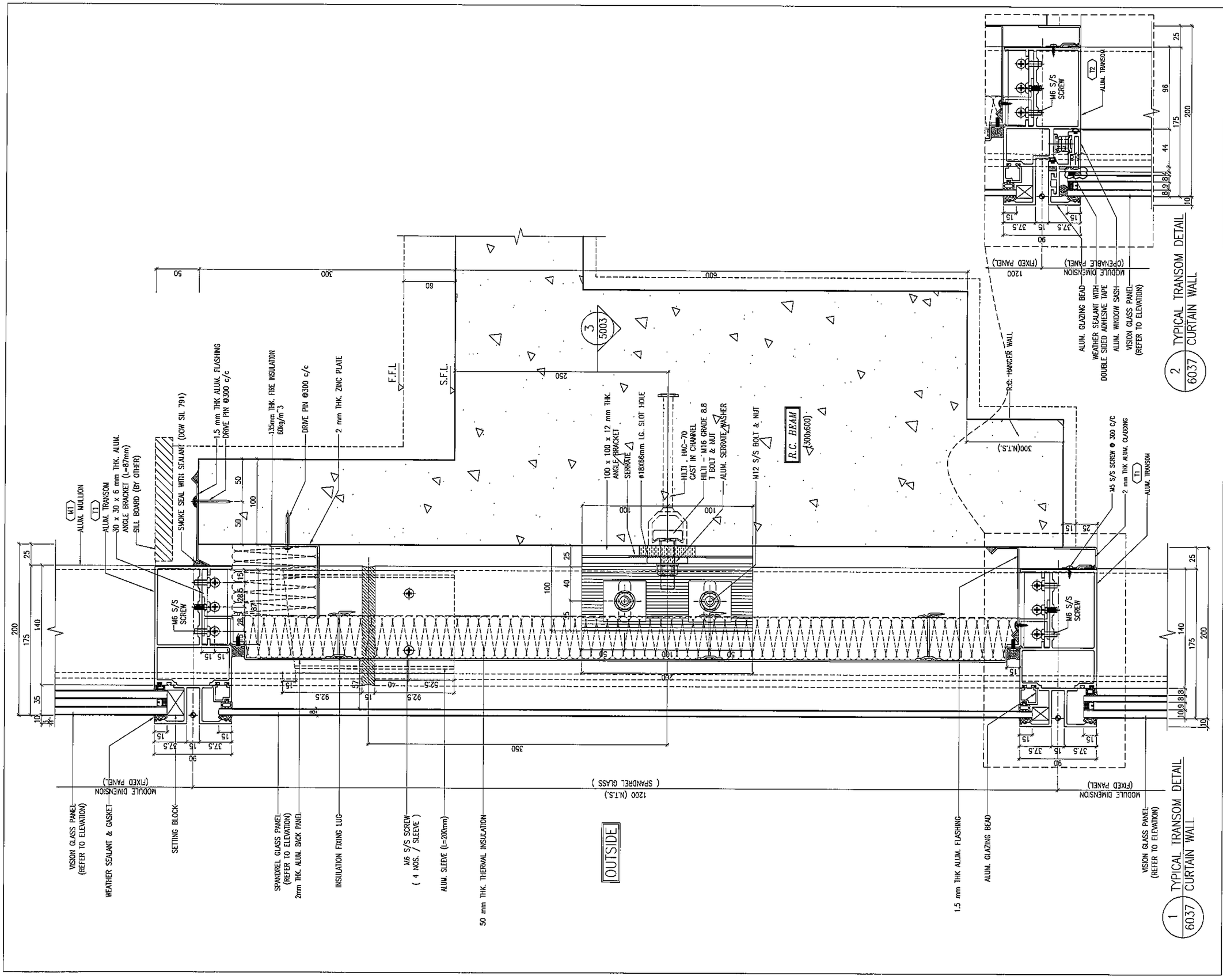

B.D. REF :

CLIENT :
信和置業有限公司
Sino Land Company Limited

ARCHITECT :
WONG TUNG & PARTNERS LIMITED
ARCHITECTS & PLANNERS

MAIN CONTRACTOR :
CR Construction Company Limited

STRUCTURAL ENGINEER :
AECOM

FACADE CONSULTANT:
AECOM

NOTE :
1. ALL DIMENSIONS ARE IN mm.
2. ALL ELEVATIONS ARE VIEWED FROM OUTSIDE.
3. ALL DIMENSIONS TO BE VERIFIED ON SITE BEFORE FABRICATION.

LEGEND :
- (X1) / (XG01) — DETAIL MARK NO. / REFER SHEET NO.
1. F.F.L. --FINISHED FLOOR LEVEL
2. S.F.L. --STRUCTURAL FLOOR LEVEL
3. (/R) --REVERSED DETAIL

NO.	DATE	REVISED	BY

JOB NO. : J-837

PROJECT :
URA KWUN TONG TOWN CENTRE REDEVELOPMENT (AREA 2 & 3) AT NKIL 6514, KWUN TONG, KWLOON

TITLE :
TYPICAL TRANSOM DETAIL FOR CURTAIN WALL

DATE : 13-JUL-18	SCALE : 1:2 (A1)
DRAWN BY : ASING	CHECKED BY : -

美特鋁質有限公司
MIDI ALUMINIUM FABRICATOR LTD.
Units 6-8, Sunray Industrial Centre, 1/F
610 Cha Kwo Ling Road, Kowloon
Tel:23489211-4 Fax:(852)27727666

DWG NO. : J837-CW-6037 | REV. : -

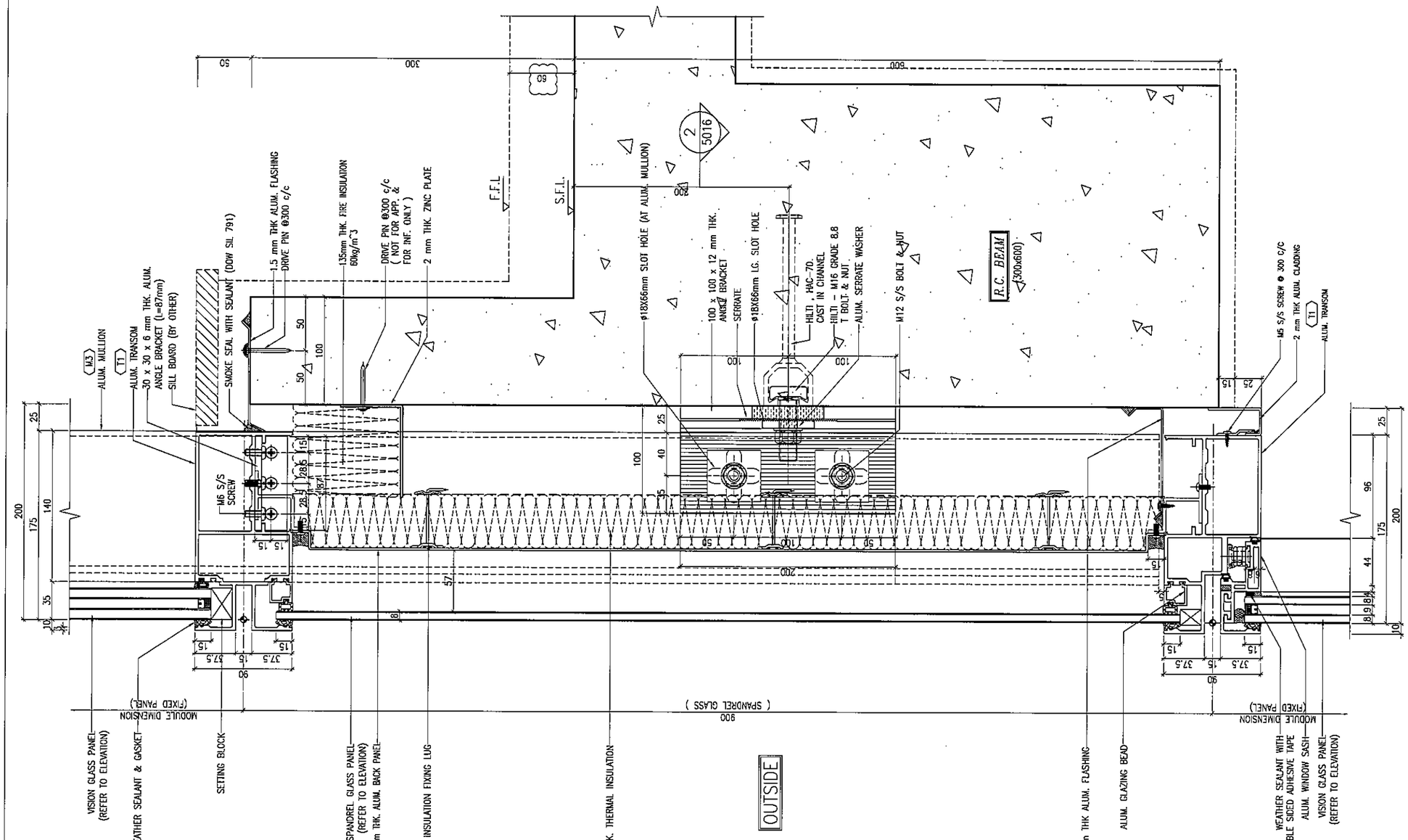

1 / 6026 TYPICAL TRANSOM DETAIL CURTAIN WALL

B.D. REF :

CLIENT :
信和置業有限公司
Sino Land Company Limited

ARCHITECT :
WONG TUNG & PARTNERS LIMITED
ARCHITECTS & PLANNERS

MAIN CONTRACTOR :
CR Construction Company Limited

STRUCTURAL ENGINEER :
AECOM

FACADE CONSULTANT:
AECOM

NOTE :
1. ALL DIMENSIONS ARE IN mm.
2. ALL ELEVATIONS ARE VIEWED FROM OUTSIDE.
3. ALL DIMENSIONS TO BE VERIFIED ON SITE BEFORE FABRICATION.

LEGEND :
X1 / XOD1 — DETAIL MARK NO. / REFER SHEET NO.
1. F.F.L. --FINISHED FLOOR LEVEL
2. S.F.L. --STRUCTURAL FLOOR LEVEL
3. /R --REVERSED DETAIL

NO.	DATE	REVISED	BY

JOB NO. : J-837

PROJECT :
URA KWUN TONG TOWN CENTRE REDEVELOPMENT (AREA 2 & 3) AT NKIL 6514, KWUN TONG, KWLOON

TITLE :
TYPICAL TRANSOM DETAIL FOR CURTAIN WALL

DATE : 24-MAR-19	SCALE : 1:2 (A1)
DRAWN BY : ASING	CHECKED BY : -

美特鋁質有限公司
MIDI ALUMINIUM FABRICATOR LTD.
Units 6-8, Sunray Industrial Centre, 1/F
610 Cha Kwo Ling Road, Kowloon
Tel:23489211-4 Fax:(852)27727666

DWG NO. : J837-CW-6038 REV. : -

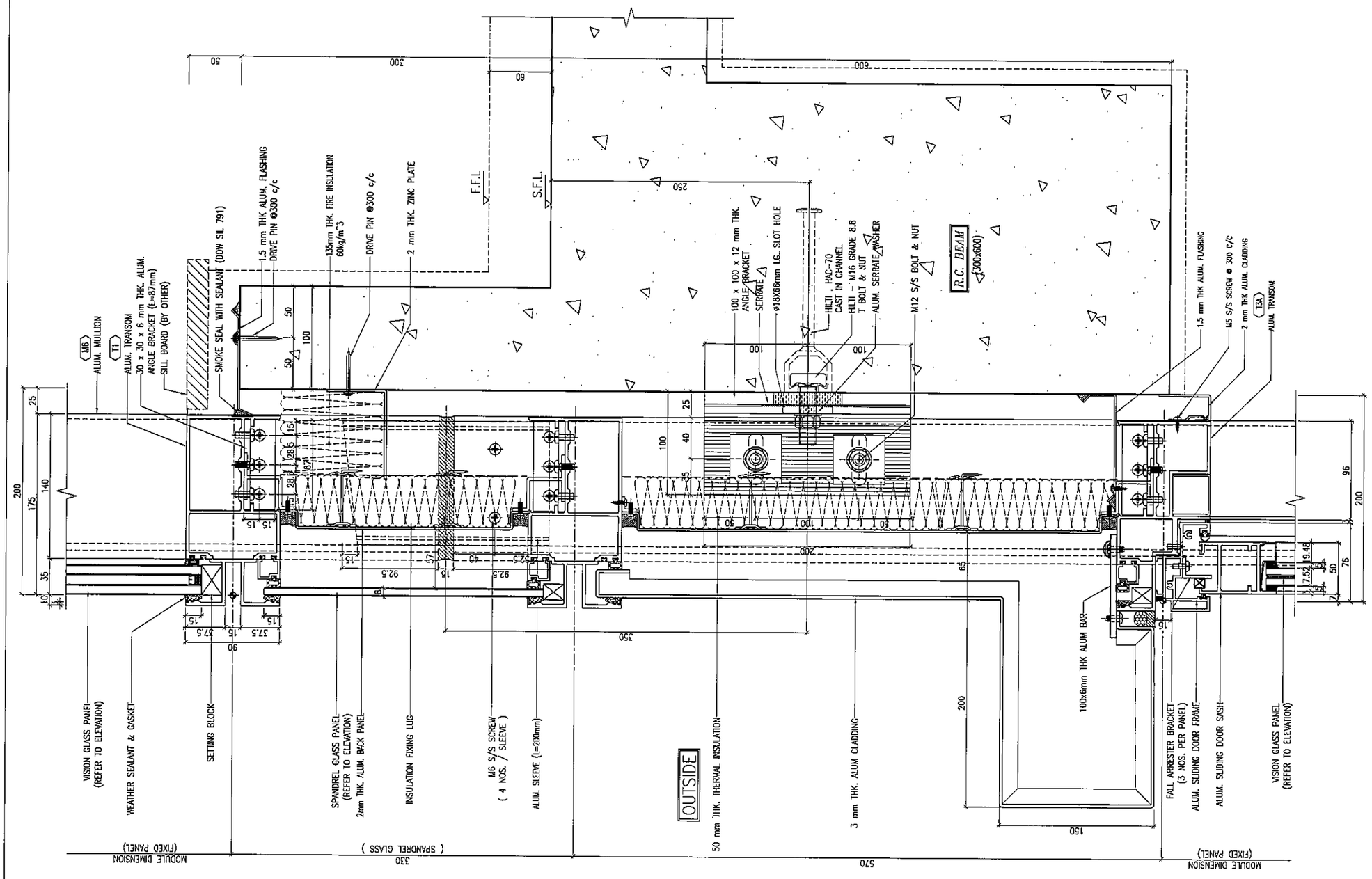

1 / 6039 TYPICAL TRANSOM DETAIL CURTAIN WALL

B.D. REF :

CLIENT :
信和置業有限公司
Sino Land Company Limited

ARCHITECT :
WONG TUNG & PARTNERS LIMITED
ARCHITECTS & PLANNERS

MAIN CONTRACTOR :
CR Construction Company Limited

STRUCTURAL ENGINEER :
AECOM

FACADE CONSULTANT:
AECOM

NOTE :
1. ALL DIMENSIONS ARE IN mm.
2. ALL ELEVATIONS ARE VIEWED FROM OUTSIDE.
3. ALL DIMENSIONS TO BE VERIFIED ON SITE BEFORE FABRICATION.

LEGEND :
X1 / X001 — DETAIL MARK NO. / REFER SHEET NO.
1. F.F.L. --FINISHED FLOOR LEVEL
2. S.F.L. --STRUCTURAL FLOOR LEVEL
3. /R --REVERSED DETAIL

NO.	DATE	REVISED	BY

JOB NO. : J-837

PROJECT :
URA KWUN TONG TOWN CENTRE REDEVELOPMENT (AREA 2 & 3) AT NKIL 6514, KWUN TONG, KWLOON

TITLE :
TYPICAL TRANSOM DETAIL FOR CURTAIN WALL

DATE : 13-JUN-19 | SCALE : 1:2 (A1)

DRAWN BY : ASING | CHECKED BY : -

美特鋁質有限公司
MIDI ALUMINIUM FABRICATOR LTD.
Units 6-8, Sunray Industrial Centre, 1/F
610 Cha Kwo Ling Road, Kowloon
Tel:23489211-4 Fax:(852)27727666

DWG NO. : J837-CW-6039 | REV. : -

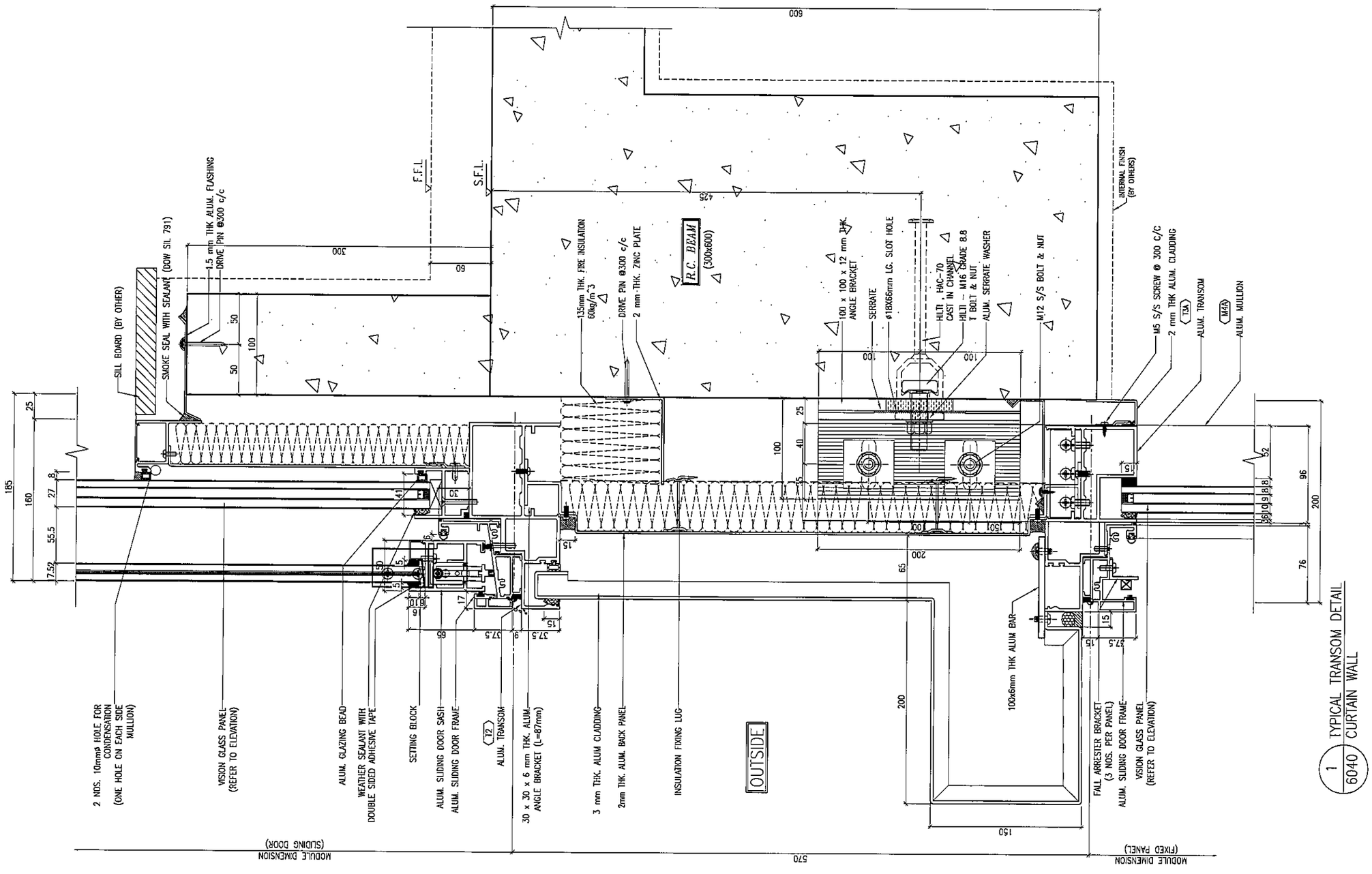

1/6040 TYPICAL TRANSOM DETAIL CURTAIN WALL

B.D. REF :

CLIENT :
信和置業有限公司
Sino Land Company Limited

ARCHITECT :
WONG TUNG & PARTNERS LIMITED
ARCHITECTS & PLANNERS

MAIN CONTRACTOR :
CR Construction Company Limited

STRUCTURAL ENGINEER :
AECOM

FACADE CONSULTANT:
AECOM

NOTE :
1. ALL DIMENSIONS ARE IN mm.
2. ALL ELEVATIONS ARE VIEWED FROM OUTSIDE.
3. ALL DIMENSIONS TO BE VERIFIED ON SITE BEFORE FABRICATION.

LEGEND :
X1 — DETAIL MARK NO.
X001 — REFER SHEET NO.

1. F.F.L. --FINISHED FLOOR LEVEL
2. S.F.L. --STRUCTURAL FLOOR LEVEL
3. /R --REVERSED DETAIL

NO.	DATE	REVISED	BY

JOB NO. : J-837

PROJECT :
URA KWUN TONG TOWN CENTRE REDEVELOPMENT (AREA 2 & 3) AT NKIL 6514, KWUN TONG, KWLOON

TITLE :
TYPICAL TRANSOM DETAIL FOR CURTAIN WALL

DATE : 13-JUN-19 | SCALE : 1:2 (A1)

DRAWN BY : ASING | CHECKED BY : --

美特鋁質有限公司
MIDI ALUMINIUM FABRICATOR LTD.
Units 6-8, Sunray Industrial Centre, 1/F
610 Cha Kwo Ling Road, Kowloon
Tel:23489211-4 Fax:(852)27727666

DWG NO. : J837-CW-6040 | REV. : --

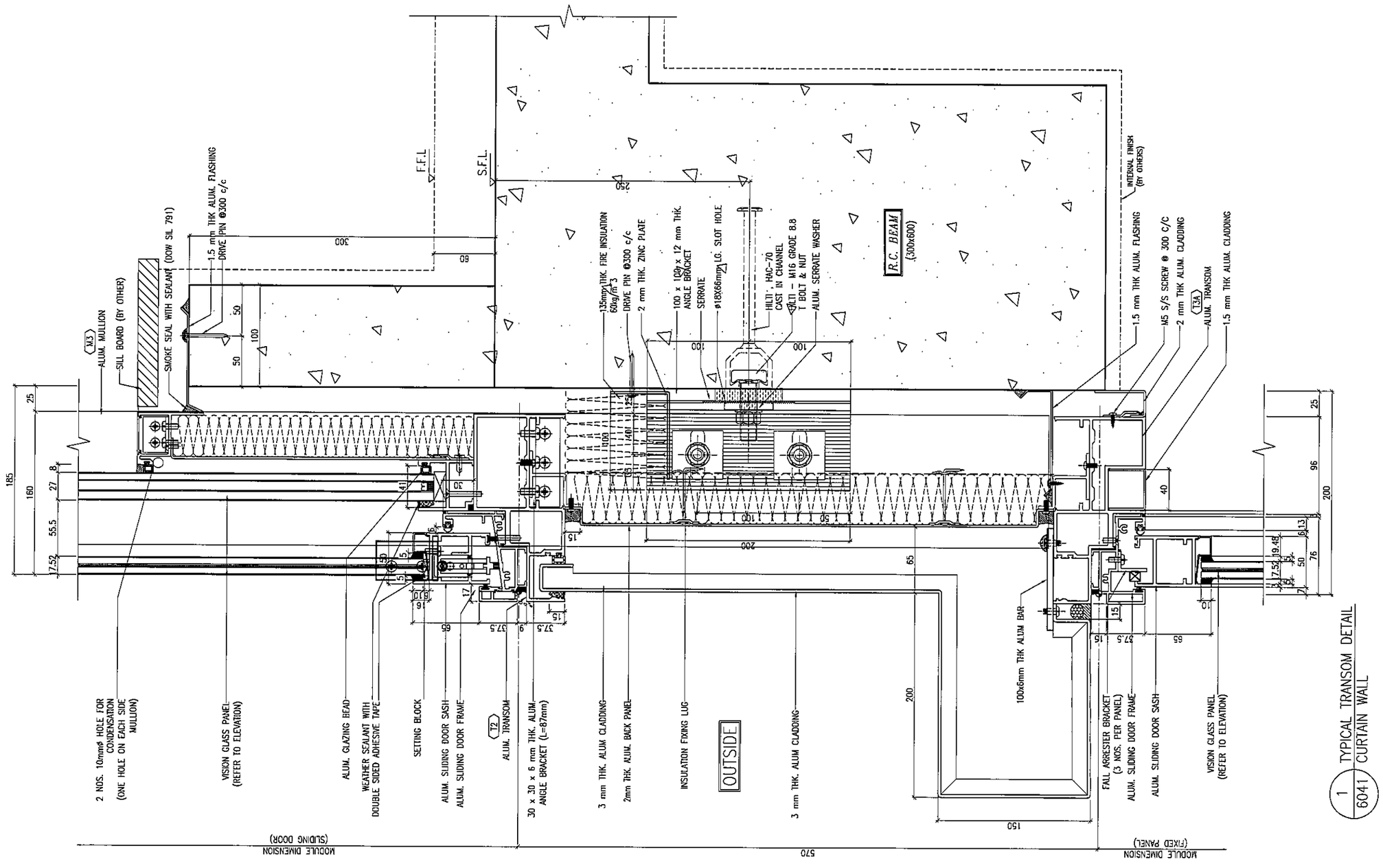

1 TYPICAL TRANSOM DETAIL
6041 CURTAIN WALL

B.D. REF :

CLIENT :
信和置業有限公司
Sino Land Company Limited

ARCHITECT :
WONG TUNG & PARTNERS LIMITED
ARCHITECTS & PLANNERS

MAIN CONTRACTOR :
CR Construction Company Limited

STRUCTURAL ENGINEER :
AECOM

FACADE CONSULTANT:
AECOM

NOTE :
1. ALL DIMENSIONS ARE IN mm.
2. ALL ELEVATIONS ARE VIEWED FROM OUTSIDE.
3. ALL DIMENSIONS TO BE VERIFIED ON SITE BEFORE FABRICATION.

LEGEND :
X1 — DETAIL MARK NO.
X001 — REFER SHEET NO.

1. F.F.L. --FINISHED FLOOR LEVEL
2. S.F.L. --STRUCTURAL FLOOR LEVEL
3. (R) --REVERSED DETAIL

NO.	DATE	REVISED	BY

JOB NO. : J-837

PROJECT :
URA KWUN TONG TOWN CENTRE REDEVELOPMENT (AREA 2 & 3) AT NKIL 6514, KWUN TONG, KWLOON

TITLE :
TYPICAL TRANSOM DETAIL FOR CURTAIN WALL

DATE : 13-JUN-19 | SCALE : 1:2 (A1)

DRAWN BY : ASING | CHECKED BY : -

美特鋁質有限公司
MIDI ALUMINIUM FABRICATOR LTD.
Units 6-8, Sunray Industrial Centre, 1/F
610 Cha Kwo Ling Road, Kowloon
Tel:23489211-4 Fax:(852)27727666

DWG NO. : J837-CW-6041 | REV. : -

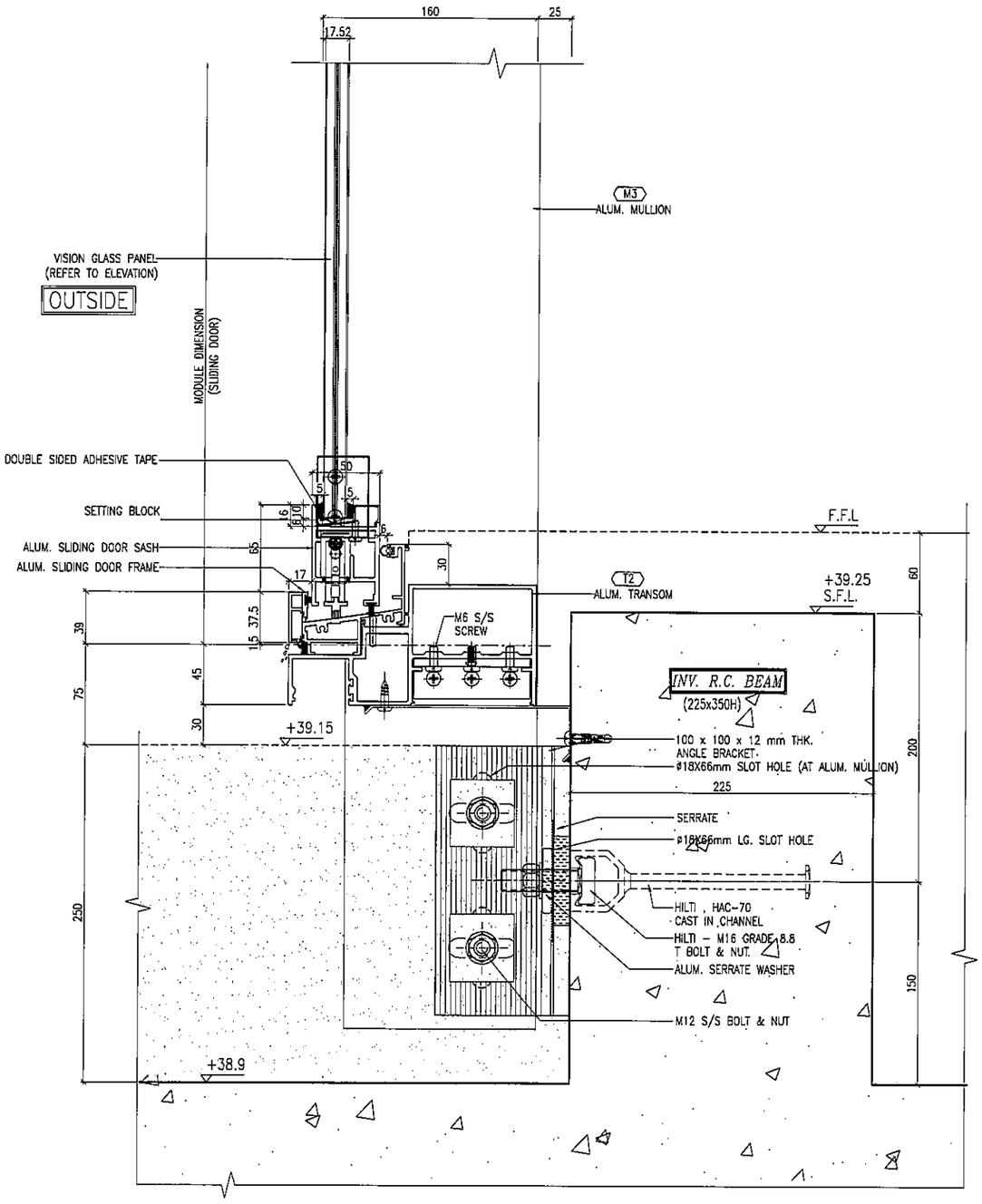

1 / 6042 TYPICAL TRANSOM DETAIL CURTAIN WALL

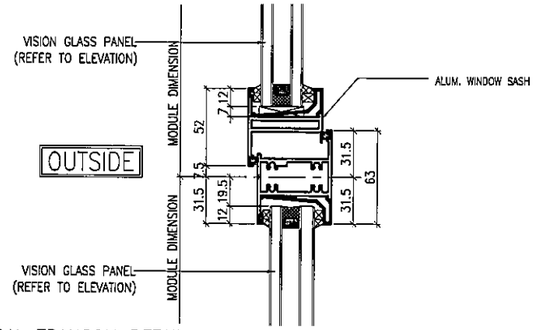

3 / 6042 TYPICAL TRANSOM DETAIL CURTAIN WALL

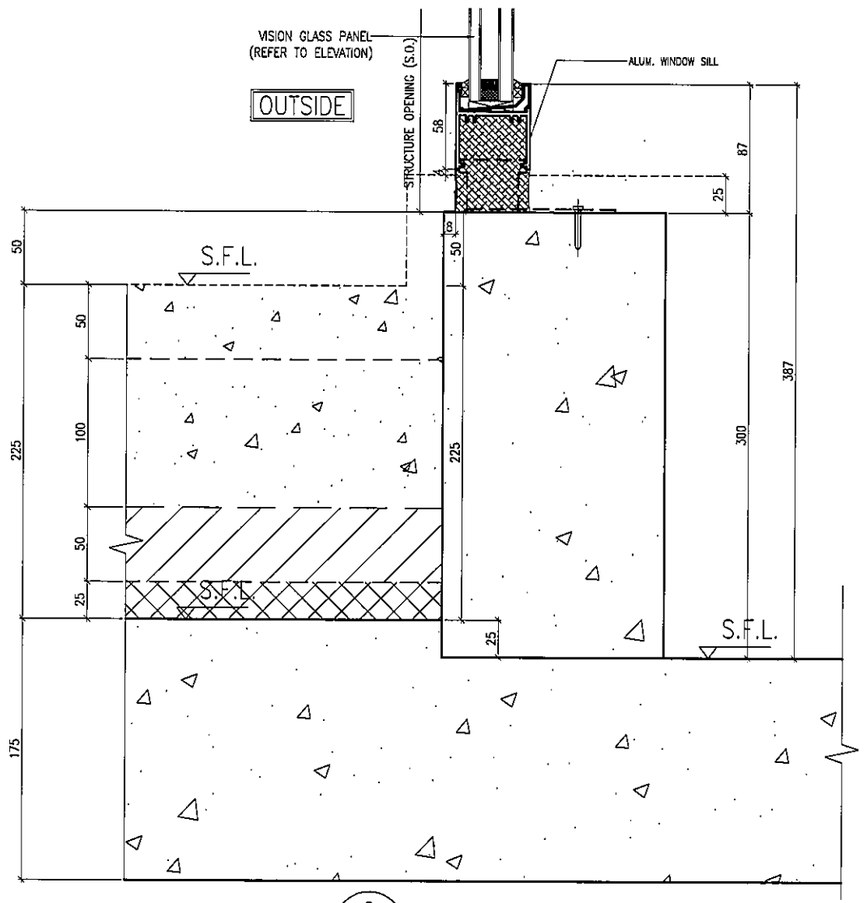

2 / 6042 TYPICAL TRANSOM DETAIL CURTAIN WALL

B.D. REF :

CLIENT :
信和置業有限公司
Sino Land Company Limited

ARCHITECT : WONG TUNG & PARTNERS LIMITED
ARCHITECTS & PLANNERS

MAIN CONTRACTOR :
CR Construction Company Limited

STRUCTURAL ENGINEER :
AECOM

FACADE CONSULTANT:
AECOM

NOTE :
1. ALL DIMENSIONS ARE IN mm.
2. ALL ELEVATIONS ARE VIEWED FROM OUTSIDE.
3. ALL DIMENSIONS TO BE VERIFIED ON SITE BEFORE FABRICATION.

LEGEND :
X1 / X001 — DETAIL MARK NO. / REFER SHEET NO.
1. F.F.L. --FINISHED FLOOR LEVEL
2. S.F.L. --STRUCTURAL FLOOR LEVEL
3. /R --REVERSED DETAIL

NO.	DATE	REVISED	BY

JOB NO. : J-837

PROJECT :
URA KWUN TONG TOWN CENTRE REDEVELOPMENT (AREA 2 & 3) AT NKIL 6514, KWUN TONG, KWLOON

TITLE :
TYPICAL TRANSOM DETAIL FOR CURTAIN WALL

DATE : 13-JUN-19	SCALE : 1:2 (A1)
DRAWN BY : ASING	CHECKED BY : -

美特鋁質有限公司
MIDI ALUMINIUM FABRICATOR LTD.
Units 6-8, Sunrey Industrial Centre, 1/F
610 Cha Kwo Ling Road, Kowloon
Tel:23489211-4 Fax:(852)27727666

DWG NO. : J837-CW-6042 REV. : -

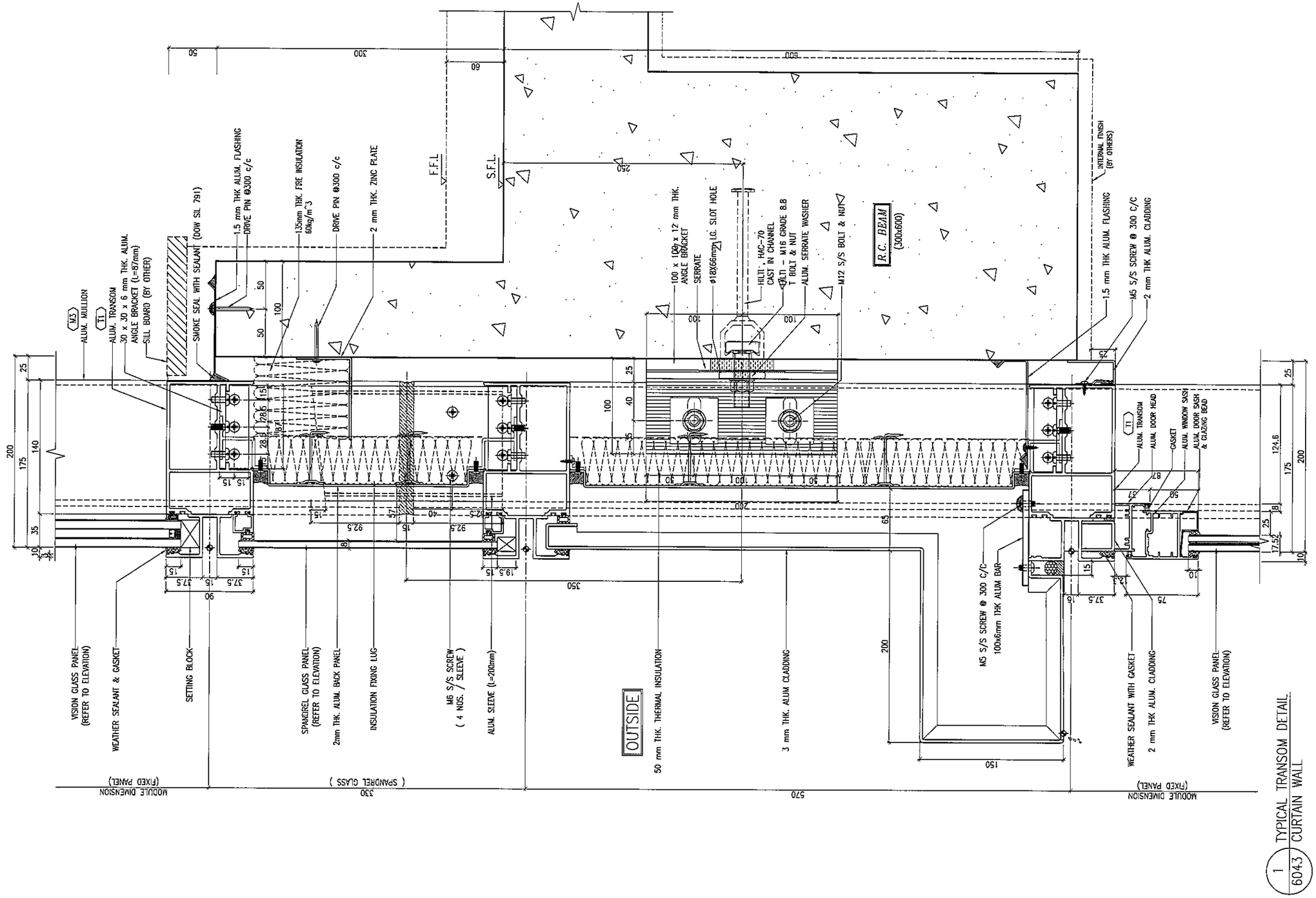

1 TYPICAL TRANSOM DETAIL 6043 CURTAIN WALL

B.D. REF :

CLIENT :
信和置業有限公司
Sino Land Company Limited

ARCHITECT : WONG TUNG & PARTNERS LIMITED ARCHITECTS & PLANNERS

MAIN CONTRACTOR :
CR Construction Company Limited

STRUCTURAL ENGINEER :
AECOM

FACADE CONSULTANT:
AECOM

NOTE :
1. ALL DIMENSIONS ARE IN mm.
2. ALL ELEVATIONS ARE VIEWED FROM OUTSIDE.
3. ALL DIMENSIONS TO BE VERIFIED ON SITE BEFORE FABRICATION.

LEGEND :
X1 — DETAIL MARK NO.
XG01 — REFER SHEET NO.

1. F.F.L. --FINISHED FLOOR LEVEL
2. S.F.L. --STRUCTURAL FLOOR LEVEL
3. /R --REVERSED DETAIL

NO.	DATE	REVISED	BY

JOB NO. : J-837

PROJECT :
URA KWUN TONG TOWN CENTRE REDEVELOPMENT (AREA 2 & 3) AT NKIL 6514, KWUN TONG, KWLOON

TITLE :
TYPICAL TRANSOM DETAIL FOR CURTAIN WALL

DATE : 13-JUN-19 | SCALE : 1:2 (A1)

DRAWN BY : ASING | CHECKED BY : -

美特鋁製有限公司
MIDI ALUMINIUM FABRICATOR LTD.
Units 6-8, Sunray Industrial Centre, 1/F
610 Cha Kwo Ling Road, Kowloon
Tel:23489211-4 Fax:(852)27727666

DWG NO. : J837-CW-6043 | REV. : -

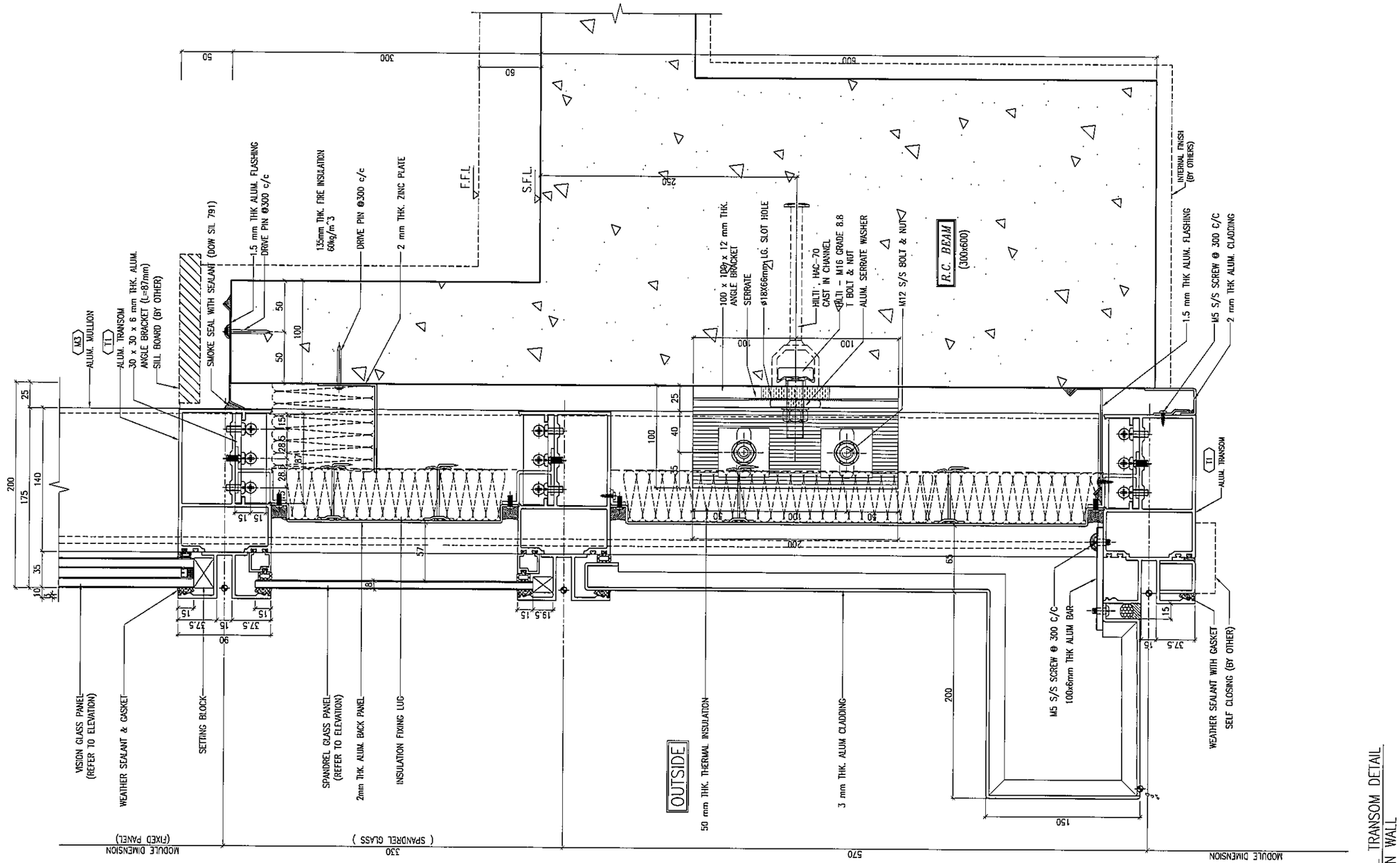

1 TYPICAL TRANSOM DETAIL CURTAIN WALL
6044

B.D. REF :

CLIENT :
信和置業有限公司
Sino Land Company Limited

ARCHITECT :
WONG TUNG & PARTNERS LIMITED
ARCHITECTS & PLANNERS

MAIN CONTRACTOR :
CR Construction Company Limited

STRUCTURAL ENGINEER :
AECOM

FACADE CONSULTANT:
AECOM

NOTE :
1. ALL DIMENSIONS ARE IN mm.
2. ALL ELEVATIONS ARE VIEWED FROM OUTSIDE.
3. ALL DIMENSIONS TO BE VERIFIED ON SITE BEFORE FABRICATION.

LEGEND :
X1 — DETAIL MARK NO.
X001 — REFER SHEET NO.

1. F.F.L. --FINISHED FLOOR LEVEL
2. S.F.L. --STRUCTURAL FLOOR LEVEL
3. /R --REVERSED DETAIL

NO.	DATE	REVISED	BY

JOB NO. : J-837

PROJECT :
URA KWUN TONG TOWN CENTRE REDEVELOPMENT (AREA 2 & 3) AT NKIL 6514, KWUN TONG, KWLOON

TITLE :
TYPICAL TRANSOM DETAIL FOR CURTAIN WALL

DATE : 13-JUN-19 | SCALE : 1:2 (A1)

DRAWN BY : ASING | CHECKED BY : -

美特鋁質有限公司
MIDI ALUMINIUM FABRICATOR LTD.
Units 6-8, Sunray Industrial Centre, 1/F
610 Cha Kwo Ling Road, Kowloon
Tel:23489211-4 Fax:(852)27727686

DWG NO. : J837-CW-6044 | REV. : -

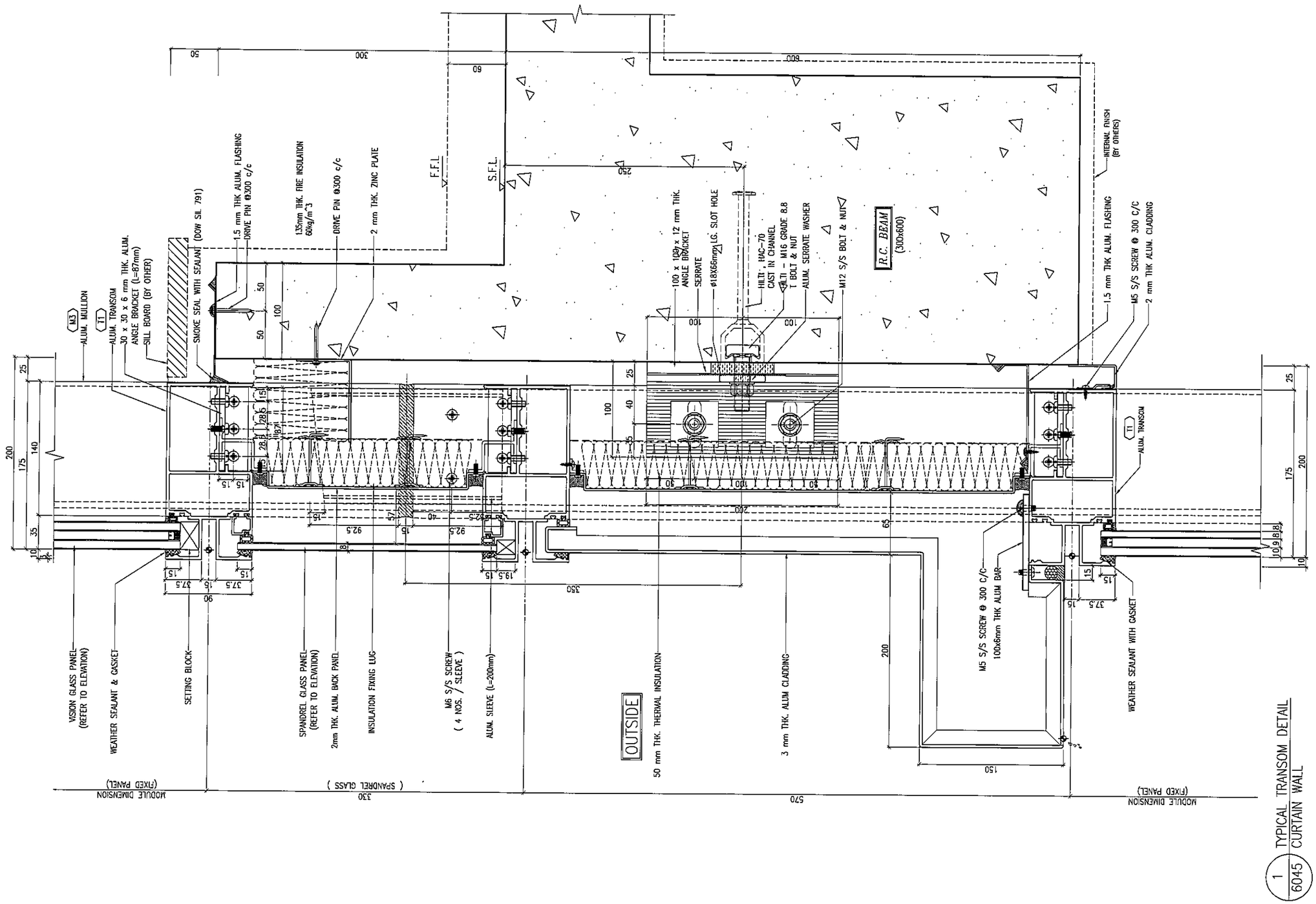

1 / 6045 TYPICAL TRANSOM DETAIL CURTAIN WALL

B.D. REF :

CLIENT :
信和置業有限公司
Sino Land Company Limited

ARCHITECT :
WONG TUNG & PARTNERS LIMITED
ARCHITECTS & PLANNERS

MAIN CONTRACTOR :
CR Construction Company Limited

STRUCTURAL ENGINEER :
AECOM

FACADE CONSULTANT:
AECOM

NOTE :
1. ALL DIMENSIONS ARE IN mm.
2. ALL ELEVATIONS ARE VIEWED FROM OUTSIDE.
3. ALL DIMENSIONS TO BE VERIFIED ON SITE BEFORE FABRICATION.

LEGEND :
X1 / X001 — DETAIL MARK NO. / REFER SHEET NO.
1. F.F.L. --FINISHED FLOOR LEVEL
2. S.F.L. --STRUCTURAL FLOOR LEVEL
3. /R --REVERSED DETAIL

NO.	DATE	REVISED	BY

JOB NO. : J-837

PROJECT :
URA KWUN TONG TOWN CENTRE REDEVELOPMENT (AREA 2 & 3) AT NKIL 6514, KWUN TONG, KWLOON

TITLE :
TYPICAL TRANSOM DETAIL FOR CURTAIN WALL

DATE : 13-JUN-19 | SCALE : 1:2 (A1)

DRAWN BY : ASING | CHECKED BY : —

美特鋁質有限公司
MIDI ALUMINIUM FABRICATOR LTD.
Units 6-8, Sunray Industrial Centre, 1/F
610 Cha Kwo Ling Road, Kowloon
Tel:23489211-4 Fax:(852)27727666

DWG NO. : J837-CW-6045 | REV. : —

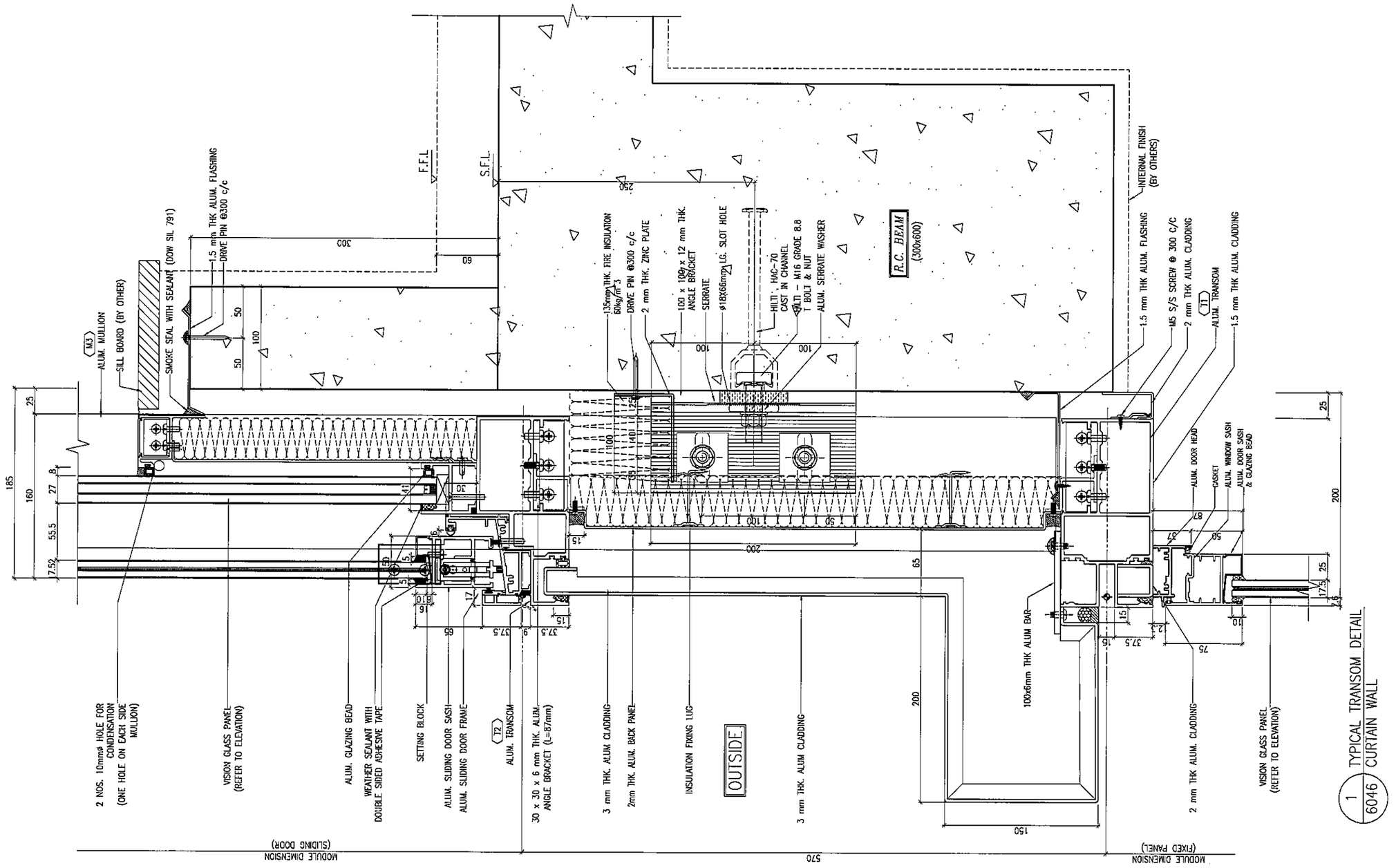

1 / 6046 TYPICAL TRANSOM DETAIL CURTAIN WALL

B.D. REF :

CLIENT :
信和置業有限公司
Sino Land Company Limited

ARCHITECT :
WONG TUNG & PARTNERS LIMITED
ARCHITECTS & PLANNERS

MAIN CONTRACTOR :
CR Construction Company Limited

STRUCTURAL ENGINEER :
AECOM

FACADE CONSULTANT:
AECOM

NOTE :
1. ALL DIMENSIONS ARE IN mm.
2. ALL ELEVATIONS ARE VIEWED FROM OUTSIDE.
3. ALL DIMENSIONS TO BE VERIFIED ON SITE BEFORE FABRICATION.

LEGEND :
- X1 / X001 — DETAIL MARK NO. / REFER SHEET NO.
1. F.F.L. --FINISHED FLOOR LEVEL
2. S.F.L. --STRUCTURAL FLOOR LEVEL
3. /R --REVERSED DETAIL

NO.	DATE	REVISED	BY

JOB NO. : J-837

PROJECT :
URA KWUN TONG TOWN CENTRE REDEVELOPMENT (AREA 2 & 3) AT NKIL 6514, KWUN TONG, KWLOON

TITLE :
TYPICAL TRANSOM DETAIL FOR CURTAIN WALL

DATE : 13-JUN-19 | SCALE : 1:2 (A1)

DRAWN BY : ASING | CHECKED BY : -

美特鋁質有限公司
MIDI ALUMINIUM FABRICATOR LTD.
Units 6-8, Sunray Industrial Centre, 1/F
610 Cha Kwo Ling Road, Kowloon
Tel:23489211-4 Fax:(852)27727666

DWG NO. : J837-CW-6046 | REV. : -

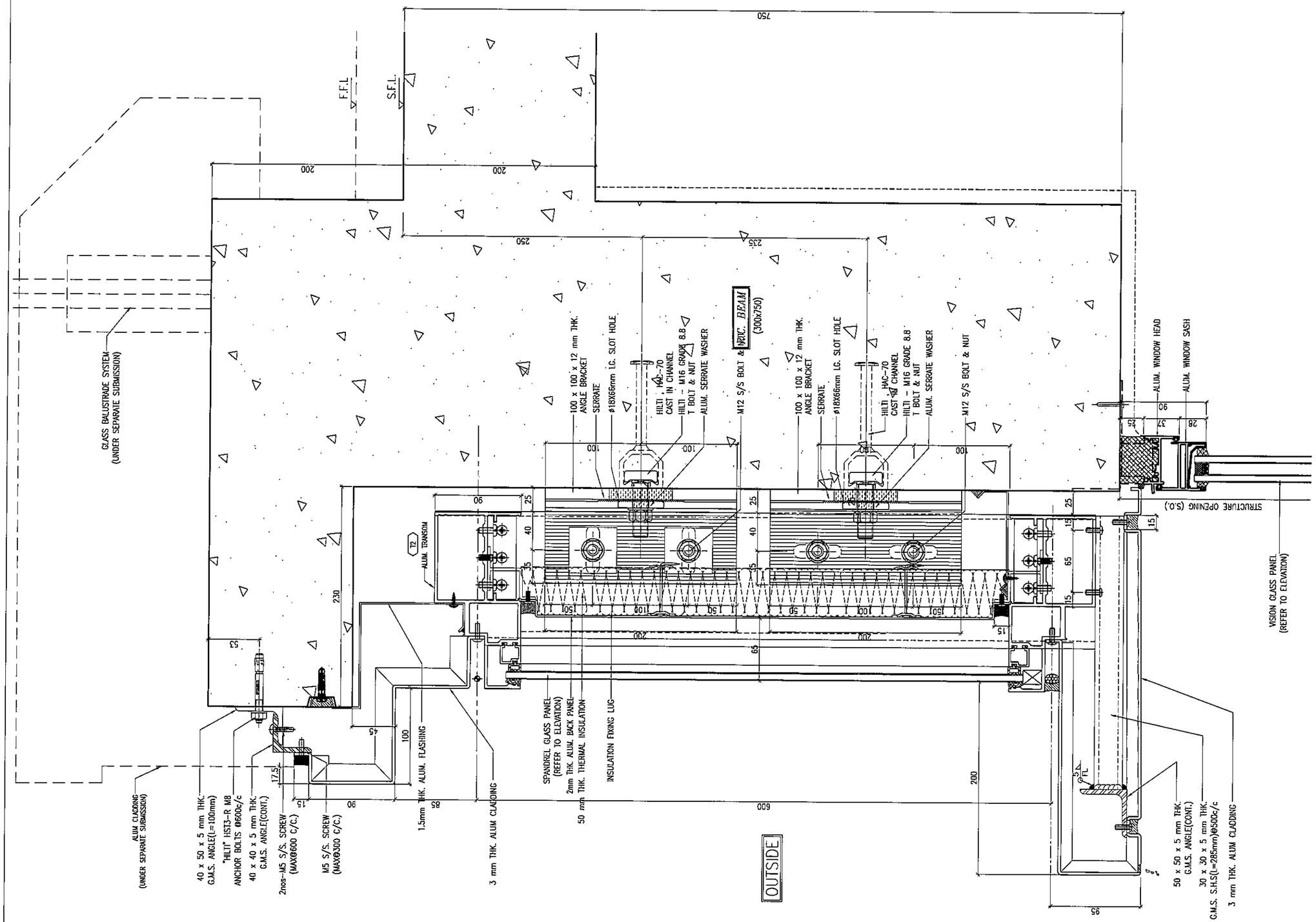

1 TYPICAL TRANSOM DETAIL
6047 CURTAIN WALL

B.D. REF :

CLIENT :
信和置業有限公司
Sino Land Company Limited

ARCHITECT :
WONG TUNG & PARTNERS LIMITED
ARCHITECTS & PLANNERS

MAIN CONTRACTOR :
CR Construction Company Limited

STRUCTURAL ENGINEER :
AECOM

FACADE CONSULTANT:
AECOM

NOTE :
1. ALL DIMENSIONS ARE IN mm.
2. ALL ELEVATIONS ARE VIEWED FROM OUTSIDE.
3. ALL DIMENSIONS TO BE VERIFIED ON SITE BEFORE FABRICATION.

LEGEND :
X1 — DETAIL MARK NO.
X001 — REFER SHEET NO.

1. F.F.L. --FINISHED FLOOR LEVEL
2. S.F.L. --STRUCTURAL FLOOR LEVEL
3. /R --REVERSED DETAIL

NO.	DATE	REVISED	BY

JOB NO. : J-837

PROJECT :
URA KWUN TONG TOWN CENTRE
REDEVELOPMENT (AREA 2 & 3) AT
NKIL 6514, KWUN TONG, KWLOON

TITLE :
TYPICAL TRANSOM DETAIL
FOR CURTAIN WALL

DATE : 16-JUL-19 | SCALE : 1:2 (A1)

DRAWN BY : ASING | CHECKED BY : -

美特鋁製有限公司
MIDI ALUMINIUM FABRICATOR LTD.
Units 6-8, Sunray Industrial Centre, 1/F
610 Cha Kwo Ling Road, Kowloon
Tel:23489211-4 Fax:(852)27727666

DWG NO. : J837-CW-6047 | REV. : -

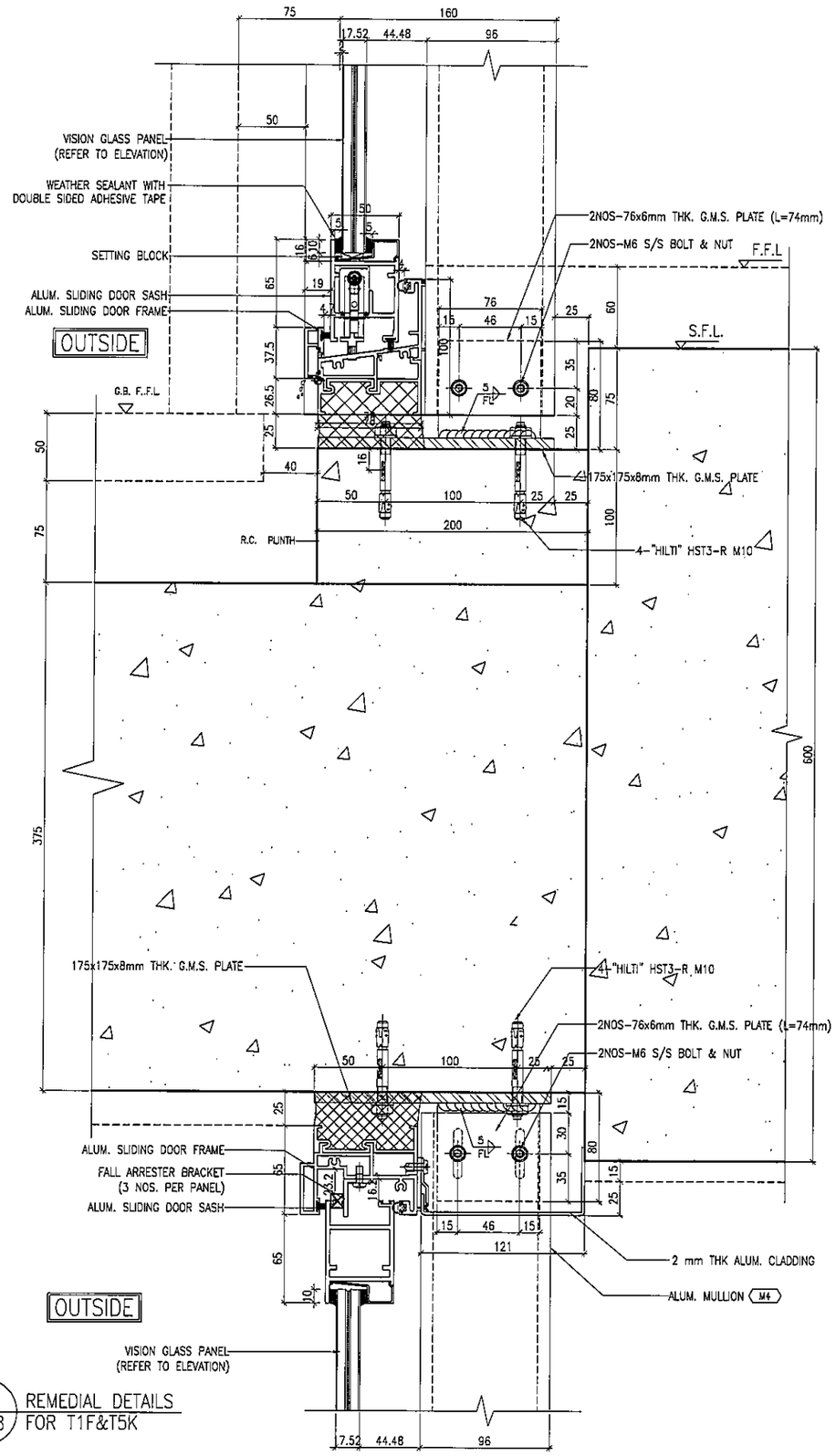

1 / 6048 REMEDIAL DETAILS FOR T1F&T5K

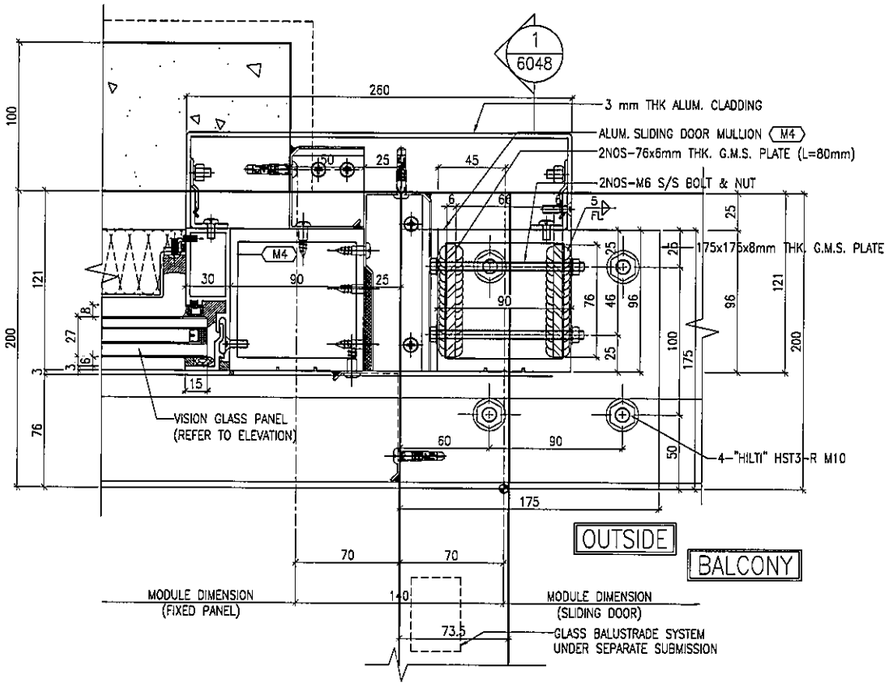

2 / 6048 REMEDIAL DETAILS FOR T1F&T5K

B.D. REF :

CLIENT :
信和置業有限公司
Sino Land Company Limited

ARCHITECT :
WONG TUNG & PARTNERS LIMITED
ARCHITECTS & PLANNERS

MAIN CONTRACTOR :
CR Construction Company Limited

STRUCTURAL ENGINEER :
AECOM

FACADE CONSULTANT:
AECOM

NOTE :
1. ALL DIMENSIONS ARE IN mm.
2. ALL ELEVATIONS ARE VIEWED FROM OUTSIDE.
3. ALL DIMENSIONS TO BE VERIFIED ON SITE BEFORE FABRICATION.

LEGEND :
X1 / XG01 — DETAIL MARK NO. / REFER SHEET NO.
1. F.F.L. --FINISHED FLOOR LEVEL
2. S.F.L. --STRUCTURAL FLOOR LEVEL
3. /R --REVERSED DETAIL

NO.	DATE	REVISED	BY

JOB NO. : J-837

PROJECT :
URA KWUN TONG TOWN CENTRE REDEVELOPMENT (AREA 2 & 3) AT NKIL 6514, KWUN TONG, KWLOON

TITLE :
REMEDIAL DETAILS
FOR CURTAIN WALL

DATE : 11-JUL-19 | SCALE : 1:2 (A1)

DRAWN BY : ASING | CHECKED BY : -

美特鋁製有限公司
MIDI ALUMINIUM FABRICATOR LTD.
Units 6-8, Sunray Industrial Centre, 1/F
610 Cha Kwo Ling Road, Kowloon
Tel:23489211-4 Fax:(852)27727666

DWG NO. : J837-CW-6048 | REV. : -

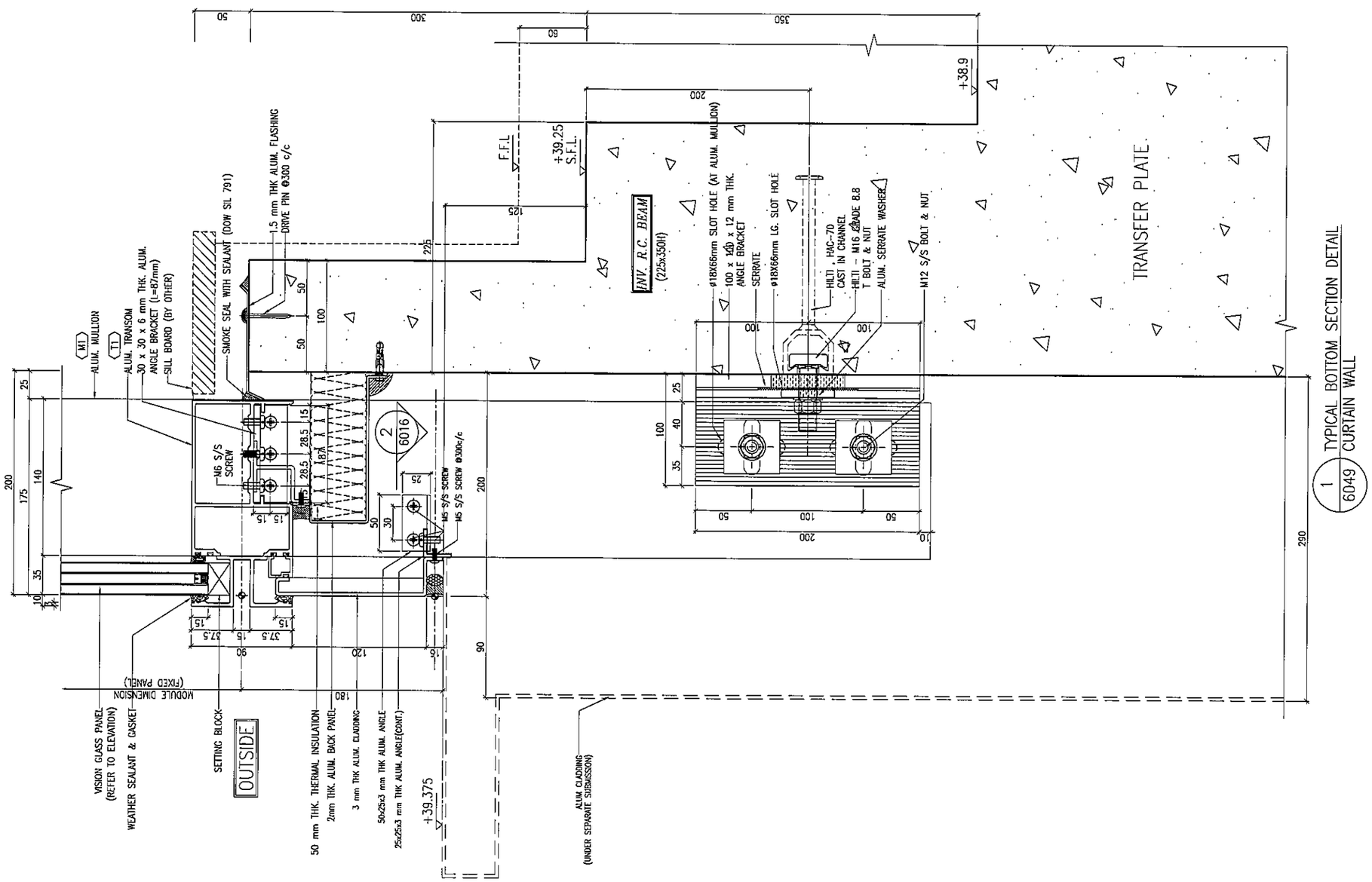

B.D. REF :

CLIENT :
信和置業有限公司
Sino Land Company Limited

ARCHITECT :
WONG TUNG & PARTNERS LIMITED
ARCHITECTS & PLANNERS

MAIN CONTRACTOR :
CR Construction Company Limited

STRUCTURAL ENGINEER :
AECOM

FACADE CONSULTANT:
AECOM

NOTE :
1. ALL DIMENSIONS ARE IN mm.
2. ALL ELEVATIONS ARE VIEWED FROM OUTSIDE.
3. ALL DIMENSIONS TO BE VERIFIED ON SITE BEFORE FABRICATION.

LEGEND :
X1 — DETAIL MARK NO.
X001 — REFER SHEET NO.
1. F.F.L. --FINISHED FLOOR LEVEL
2. S.F.L. --STRUCTURAL FLOOR LEVEL
3. /R --REVERSED DETAIL

NO.	DATE	REVISED	BY
B	15/02/2019	GENERAL REVISED	
A	24/11/2018	GENERAL REVISED	

JOB NO. : J-837

PROJECT :
URA KWUN TONG TOWN CENTRE REDEVELOPMENT (AREA 2 & 3) AT NKIL 6514, KWUN TONG, KWLOON

TITLE :
TYPICAL TRANSOM DETAIL FOR CURTAIN WALL

DATE : 18-AUG-19 | SCALE : 1:2 (A1)

DRAWN BY : Asing | CHECKED BY : -

美特鋁質有限公司
MIDI ALUMINIUM FABRICATOR LTD.
Units 6-8, Sunray Industrial Centre, 1/F
610 Cha Kwo Ling Road, Kowloon
Tel:23489211-4 Fax:(852)27727666

DWG NO. : J837-CW-6049 | REV. : -

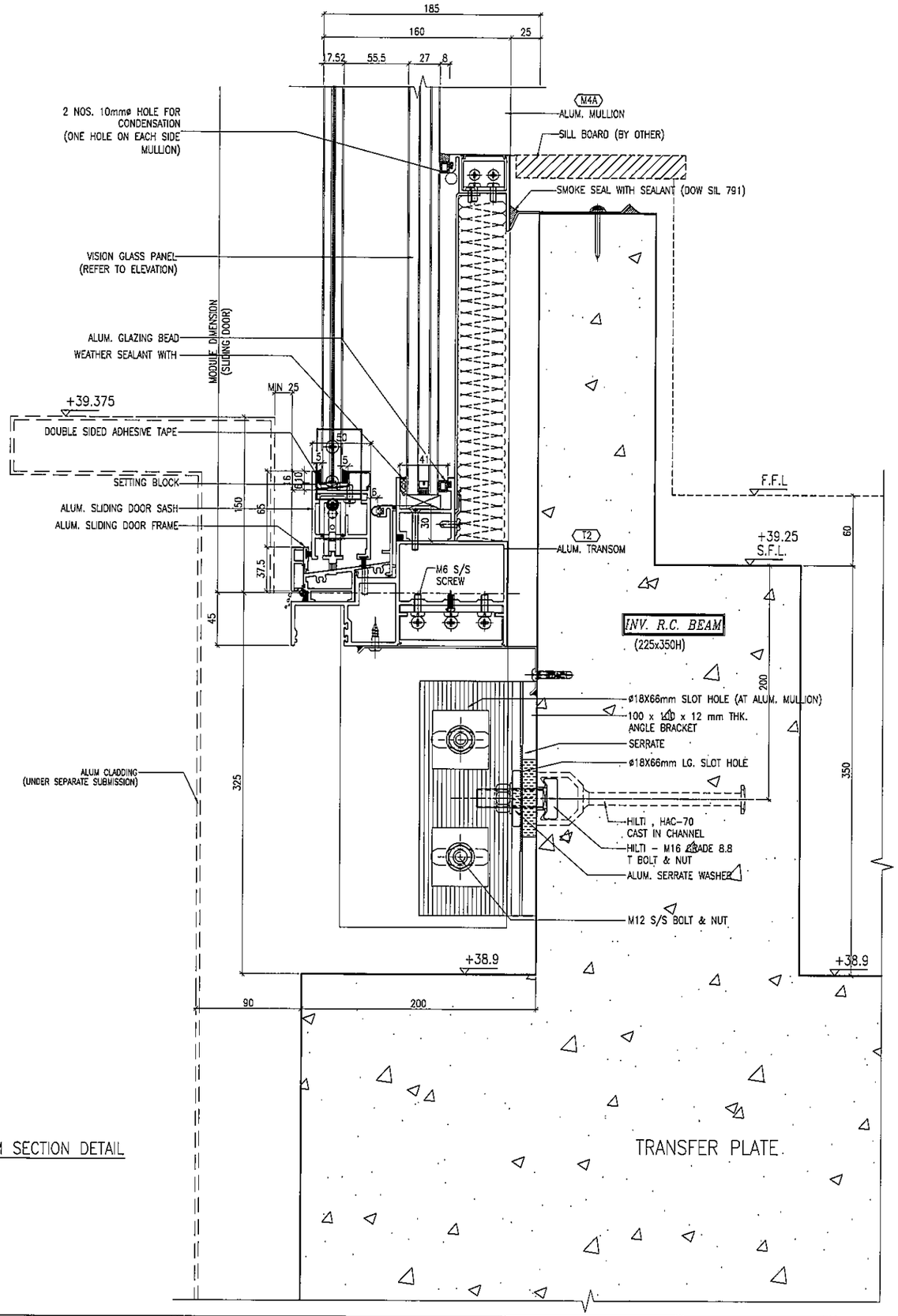

1 / 6050 TYPICAL BOTTOM SECTION DETAIL CURTAIN WALL

REFER TO J837-CW-2308

B.D. REF :

CLIENT :
信和置業有限公司
Sino Land Company Limited

ARCHITECT :
WONG TUNG & PARTNERS LIMITED
ARCHITECTS & PLANNERS

MAIN CONTRACTOR :
CR Construction Company Limited

STRUCTURAL ENGINEER :
AECOM

FACADE CONSULTANT:
AECOM

NOTE :
1. ALL DIMENSIONS ARE IN mm.
2. ALL ELEVATIONS ARE VIEWED FROM OUTSIDE.
3. ALL DIMENSIONS TO BE VERIFIED ON SITE BEFORE FABRICATION.

LEGEND :
X1 / X001 — DETAIL MARK NO. / REFER SHEET NO.
1. F.F.L. --FINISHED FLOOR LEVEL
2. S.F.L. --STRUCTURAL FLOOR LEVEL
3. /R --REVERSED DETAIL

NO.	DATE	REVISED	BY

JOB NO. : J-837

PROJECT :
URA KWUN TONG TOWN CENTRE REDEVELOPMENT (AREA 2 & 3) AT NKIL 6514, KWUN TONG, KWLOON

TITLE :
TYPICAL TRANSOM DETAIL FOR CURTAIN WALL

DATE : 18-AUG-19	SCALE : 1:2 (A1)
DRAWN BY : ASING	CHECKED BY : -

美特鋁質有限公司
MIDI ALUMINIUM FABRICATOR LTD.
Units 6-8, Sunray Industrial Centre, 1/F
610 Cha Kwo Ling Road, Kowloon
Tel:23489211-4 Fax:(852)27727666

DWG NO. : J837-CW-6050 REV. : -

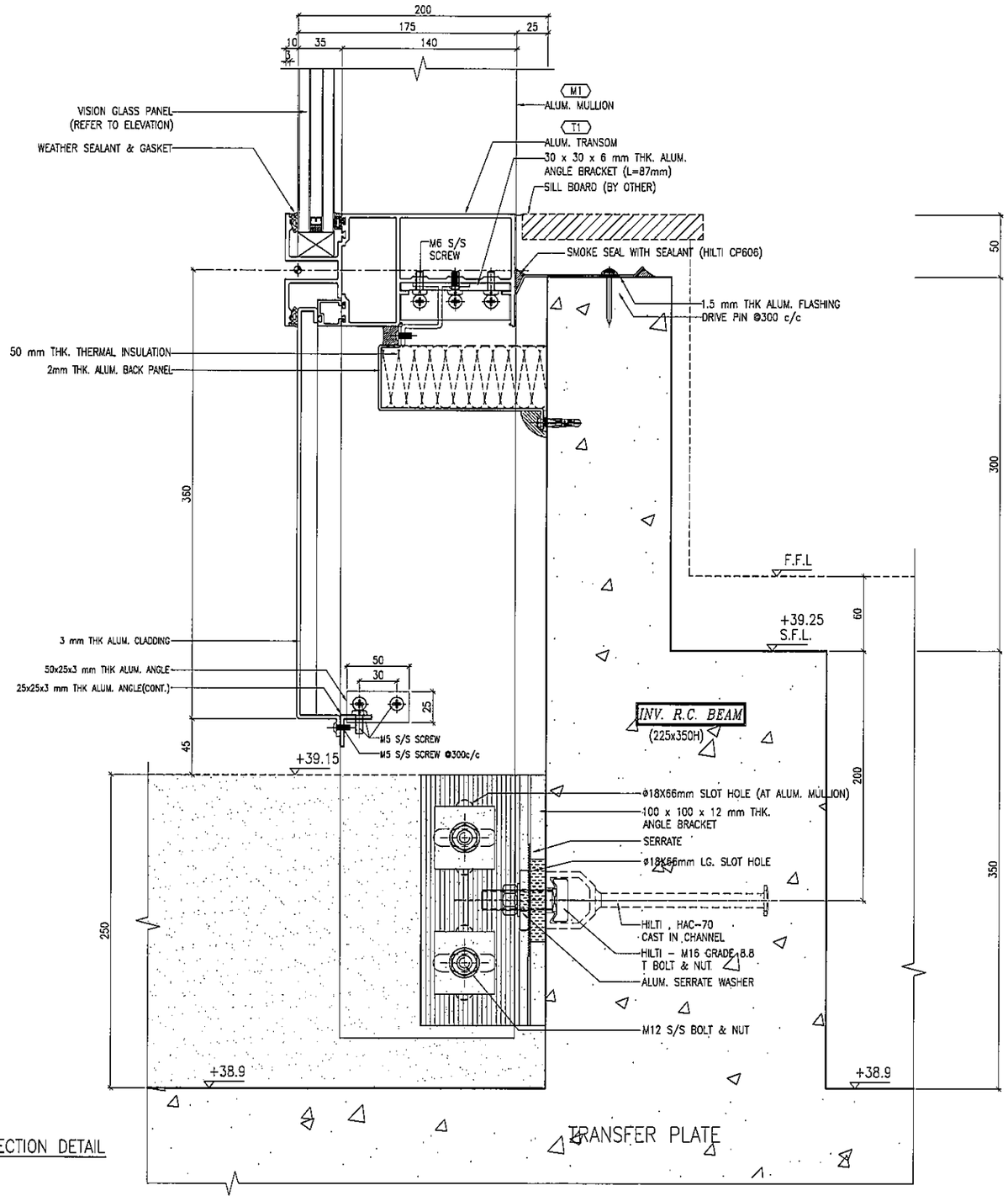

1 / 6051 TYPICAL BOTTOM SECTION DETAIL
CURTAIN WALL

REFER TO J837-CW-2308

B.D. REF :

CLIENT :
信和置業有限公司
Sino Land Company Limited

ARCHITECT :
WONG TUNG & PARTNERS LIMITED
ARCHITECTS & PLANNERS

MAIN CONTRACTOR :
CR Construction Company Limited

STRUCTURAL ENGINEER :
AECOM

FACADE CONSULTANT:
AECOM

NOTE :
1. ALL DIMENSIONS ARE IN mm.
2. ALL ELEVATIONS ARE VIEWED FROM OUTSIDE.
3. ALL DIMENSIONS TO BE VERIFIED ON SITE BEFORE FABRICATION.

LEGEND :
X1 / X001 — DETAIL MARK NO. / REFER SHEET NO.
1. F.F.L. --FINISHED FLOOR LEVEL
2. S.F.L. --STRUCTURAL FLOOR LEVEL
3. /R --REVERSED DETAIL

NO.	DATE	REVISED	BY

JOB NO. : J-837

PROJECT :
URA KWUN TONG TOWN CENTRE
REDEVELOPMENT (AREA 2 & 3) AT
NKIL 6514, KWUN TONG, KWLOON

TITLE :
TYPICAL TRANSOM DETAIL
FOR CURTAIN WALL

DATE : 18-AUG-19	SCALE : 1:2 (A1)
DRAWN BY : ASING	CHECKED BY : -

美特鋁製有限公司
MIDI ALUMINIUM FABRICATOR LTD.
Units 6-8, Sunray Industrial Centre, 1/F
610 Cha Kwo Ling Road, Kowloon
Tel:23489211-4 Fax:(852)27727666

DWG NO. : J837-CW-6051 REV. : -